App Note
Version 1.0

CMBS Reference Design Notes

Introduction

The CMBS reference schematic called “DCX81_CMBS_DESIGN_REV6_0” includes multiple options for configuration of TDM and UART interfaces. This document describes how to select the correct option for your application.

Change List

Version	Date	Changes
1.0	July 7, 2019	Baseline

Table of Contents

Change List.....1
TDM Interface.....1
UART Interface.....1

TDM Interface

Standard CMBS delivery configures the TDM interface as:

GPIO2, Tx

GPIO3, Rx

GPIO4, F_Sync

GPIO5, SCLK

Therefore, populate: R29, R28, R27. C71 can be removed

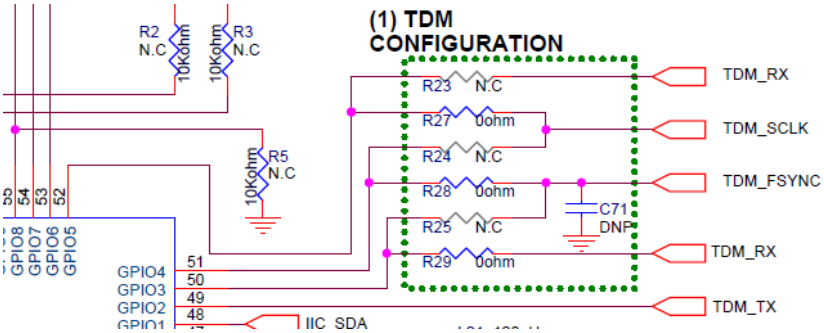

UART Interface

GPIO9 is Rx and GPIO10 is Tx. Standard CMBS SW comes configured with SW flow control. So populate R26 an R32

This document is provided by DSP Group, Inc. and/or one or more of its subsidiaries ("DSP Group"). All information and data contained in this document is for informational purposes only, without any commitment on the part of DSP Group. DSP Group shall not be liable, in any event, for any claims for damages or any other remedy in any jurisdiction whatsoever, and shall not assume responsibility for patent infringements or other rights to third parties arising out of or in connection with this document. Further, DSP Group reserves the right to revise this publication and to make changes to its content, at any time, without obligation to notify any person or entity of such revision changes. These materials are copyrighted and any unauthorized use of these materials may violate copyright, trademark, and other laws. No part of this publication may be reproduced, photocopied, stored on a retrieval system, or transmitted without the express written consent of DSP Group. Any new issue of this document invalidates previous issues.

DSP Group reserves the right to revise this publication and to make changes to its content, at any time, without obligation to notify any person or entity of such revision changes.

© 2019 DSP Group. All rights reserved.

DSP Group Headquarters: 161 S San Antonio Rd, Suite 10, Los Altos CA 94022, Tel: (408)986-4300, Fax: (408)986-4323