Refrigerator, Column

KRCx24 / KRCx30

Parts List

Hestan Commercial Corporation
3375 E. La Palma Ave.
Anaheim, CA 92806
(888)905-7463
RETAIN THIS FOR FUTURE REFERENCE

©2023 Hestan Commercial Corporation P/N: **KRC-SERVICE** REV F

Last Revised: July 24, 2023

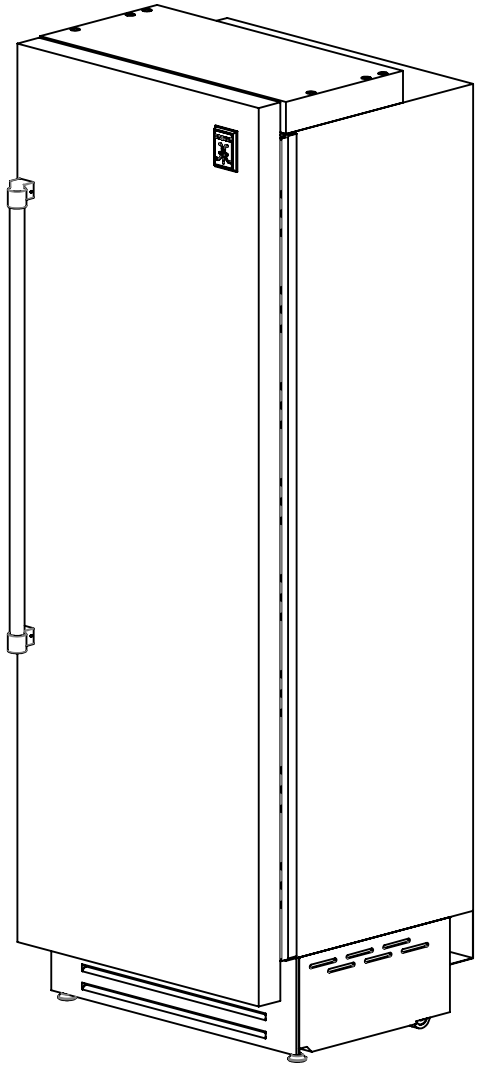

KRCR30 SHOWN

Color Extension (-XX)	Description
	Stainless Steel
-BK	Stealth - **Black**
-WH	Froth - **White**
-RD	Matador - **Red**
-YW	Sol - **Yellow**
-OR	Citra - **Orange**
-BG	Tin Roof - **Burgundy**
-PP	Lush - **Purple**
-BU	Prince - **Blue**
-GR	Grove - **Green**
-GG	Pacific Fog - **Graphite Gray**
-TQ	Bora Bora - **Turquoise**

Hestan Model Number	Product Description
KRCR24	Refrigerator Column, Right Hinged, 24"
KRCL24	Refrigerator Column, Left Hinged, 24"
KRCR24-XX	Refrigerator Column, Color, Right Hinged, 24"
KRCL24-XX	Refrigerator Column, Color, Left Hinged, 24"
KRCR30	Refrigerator Column, Right Hinged, 30"
KRCL30	Refrigerator Column, Left Hinged, 30"
KRCR30-XX	Refrigerator Column, Color, Right Hinged, 30"
KRCL30-XX	Refrigerator Column, Color, Left Hinged, 30"

HESTAN

PROPRIETARY
NO PART OF THIS DOCUMENT MAY BE REPRODUCED, STORED IN A RETRIEVAL SYSTEM, OR TRANSMITTED IN ANY FORM, WITHOUT THE WRITTEN PERMISSION OF Hestan Commercial Corporation. THIS DOCUMENT OR ANY COPIES SHALL BE RETURNED UPON WRITTEN REQUEST.

DESCRIPTION
SERVICE, REFRIGERATOR, COLUMN, (KRCx24/KRCx30)

DRAWING NO
KRC-SERVICE

REVISION
F

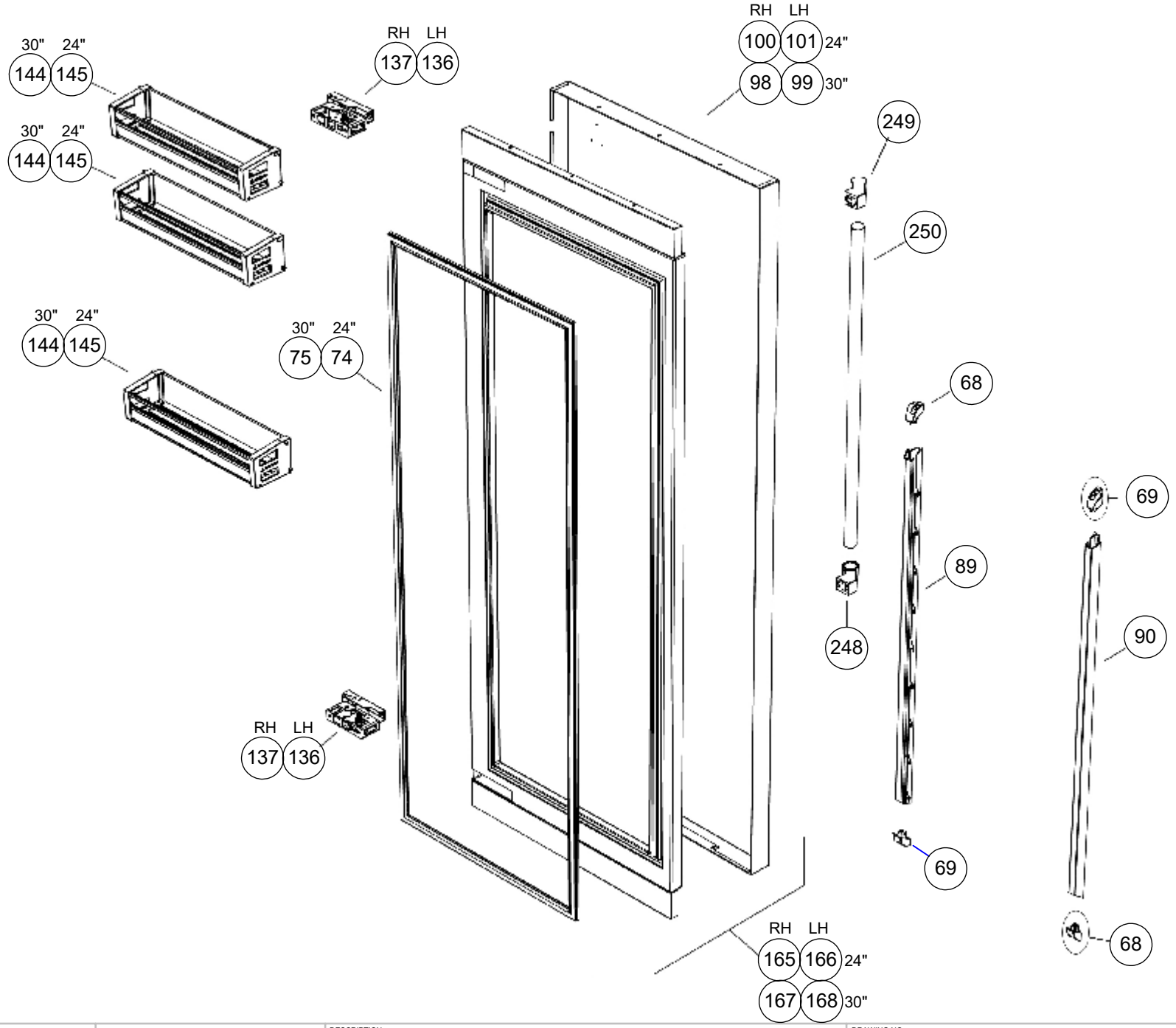

HESTAN

PROPRIETARY
NO PART OF THIS DOCUMENT MAY BE REPRODUCED, STORED IN A RETRIEVAL SYSTEM, OR TRANSMITTED IN ANY FORM, WITHOUT THE WRITTEN PERMISSION OF Hestan Commercial Corporation. THIS DOCUMENT OR ANY COPIES SHALL BE RETURNED UPON WRITTEN REQUEST.

DESCRIPTION

SERVICE, REFRIGERATOR, COLUMN, (KRCx24/KRCx30)

DRAWING NO

KRC-SERVICE

REVISION **F**

SHEET NO. 2 OF 5

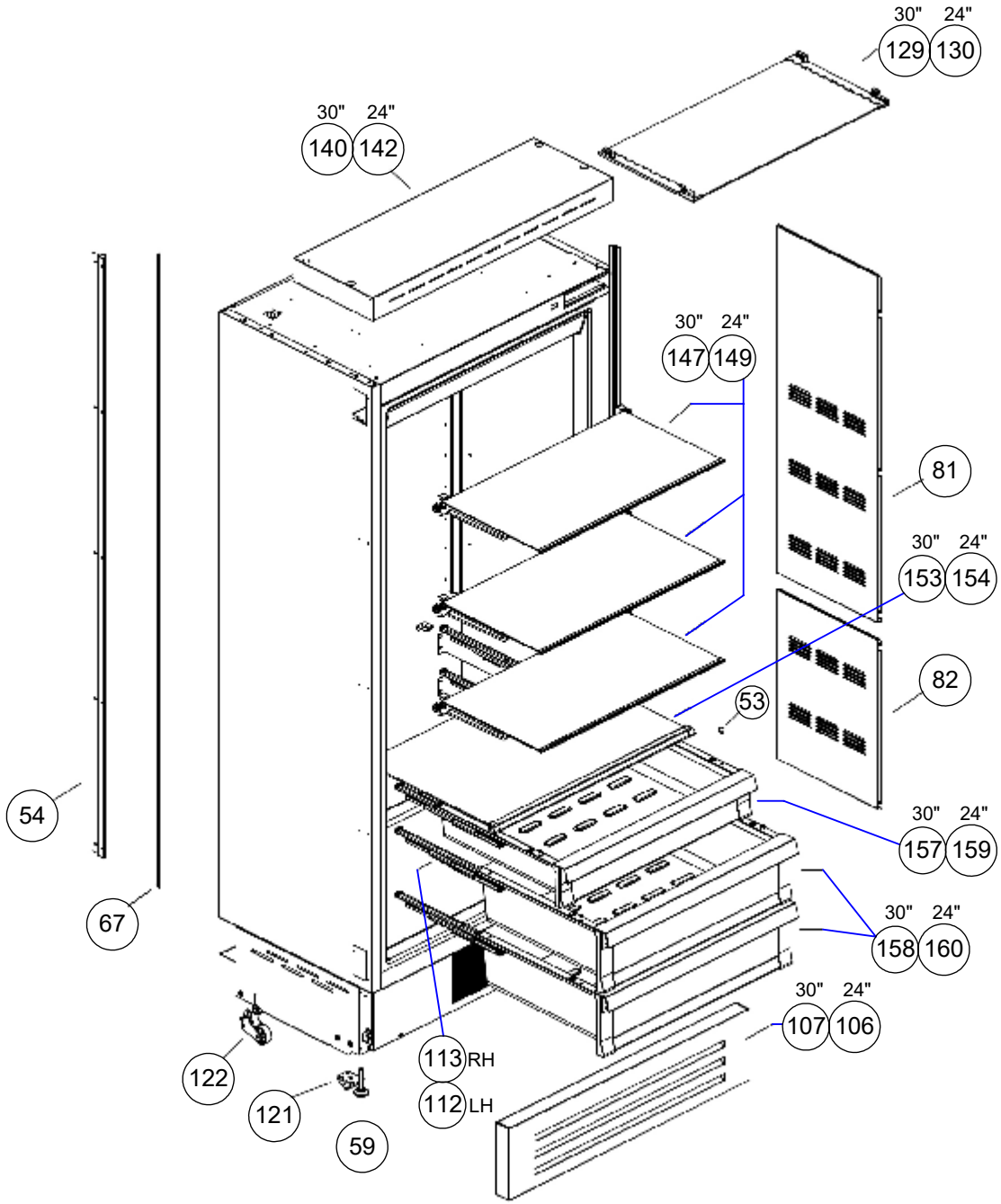

HESTAN

PROPRIETARY
NO PART OF THIS DOCUMENT MAY BE REPRODUCED, STORED IN A RETRIEVAL SYSTEM, OR TRANSMITTED IN ANY FORM, WITHOUT THE WRITTEN PERMISSION OF Hestan Commercial Corporation. THIS DOCUMENT OR ANY COPIES SHALL BE RETURNED UPON WRITTEN REQUEST.

DESCRIPTION

SERVICE, REFRIGERATOR, COLUMN, (KRCx24/KRCx30)

DRAWING NO

KRC-SERVICE

REVISION **F**

SHEET NO. 3 OF 5

TFT (BLUE) USER INTERFACE FOR SERIAL NO. 202002 AND LATER.

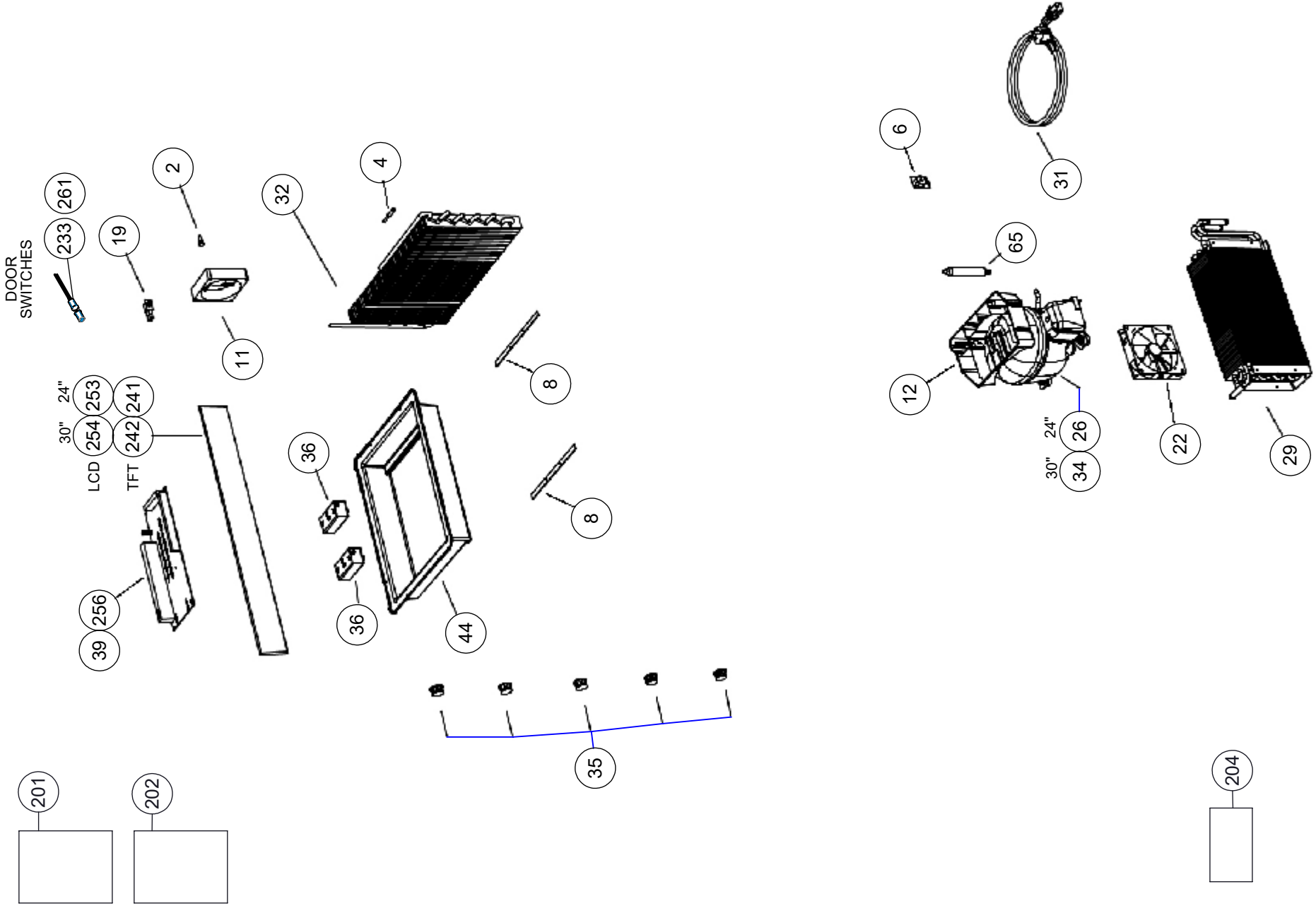

HESTAN

PROPRIETARY
NO PART OF THIS DOCUMENT MAY BE REPRODUCED, STORED IN A RETRIEVAL SYSTEM, OR TRANSMITTED IN ANY FORM, WITHOUT THE WRITTEN PERMISSION OF Hestan Commercial Corporation. THIS DOCUMENT OR ANY COPIES SHALL BE RETURNED UPON WRITTEN REQUEST.

DESCRIPTION

SERVICE, REFRIGERATOR, COLUMN, (KRCx24/KRCx30)

DRAWING NO

KRC-SERVICE

REVISION **F**

REFRIGERATION PARTS LIST

KRC - REFRIGERATOR COLUMN

July 24, 2023

BALLOON #	HESTAN P/N	DESCRIPTION	NOTES
2	023566	RUBBER PULL MOUNT FOR FANS FM3	
4	023568	NTC SENSOR 2K7 GTH WIRED	
6	023570	PCB BUZZER	
8	023572	3 LED STRIP COLD WHITE 5500-6500K F	
11	023575	FRIDGE/FRESH FAN ZONE 3414NL UL/CSA	
12	023576	COMPRESSOR DRIP PAN, EM45/65HHR 115V/60HZ	
19	023583	DOOR SWITCH, PLUNGER, FRU/FWU	All models before July 2019
22	023586	COND. FAN 4412FGL 12V CC WIRED	
26	023590	COMPRESSOR, VCC VEMY3H w/INVERTER 115V/60H	
29	023593	CONDENSER 0F	
31	023595	POWER CORD 300CM SJT 3X16AWG PLUG USA	
32	023596	FRIDGE COLUMN EVAPORATOR PORT.2.6 L/M	
34	023598	COMPRESSOR, VCC VEMY5H w/INVERTER 115V/60H	
35	023599	SPOT LED THOR CROMO 1,2W 350MA 5500	
36	023600	POWER MODULE LED APC-16-350 UL	
39	023603	POWER BOARD ASSY. 2 V STD 256K SELCO (**KRC**)	Serial Number before 202002
44	023608	POWER BOARD COVER w/LED STRIPS	
45	023609	CONTROL PANEL w/PCB 599 FZ HESTAN	
50	023614	CONTROL PANEL w/PCB 749 FZ HESTAN	
53	023866	FREEZER BASKET SCREW	
54	023867	ANODIZED ALUMINUM JOINING STRIP, LH/RH	
59	023872	ADJUSTABLE FOOT	
63	023876	VENTILATION GRILLE, LOWER, 749	
65	023878	FILTER DRYER MS 2V 1 INTERDRYER	
66	023879	VENTILATION GRILLE, LOWER, 599	
67	023880	ALUMINUM JOINING STRIP, LH/RH	
68	023881	PROFILE CAP, LEFT	
69	023882	PROFILE CAP, RIGHT	
74	023887	MAGNETIC GASKET, DOOR, 599	
75	023888	MAGNETIC GASKET, DOOR, 749	
81	023894	AIR CONVEYOR, UPPER, 0F	
82	023895	AIR CONVEYOR, LOWER, 0F	
89	023902	PILLAR, INNER DOOR, 0FR, HESTAN, LH	
90	023903	PILLAR, INNER DOOR, 0FR, HESTAN, RH	
98	023911	DOOR CLADDING, K 749 0F, HESTAN, STAINLESS, RH	SPECIFY COLOR
99	023912	DOOR CLADDING, K 749 0F, HESTAN, STAINLESS, LH	SPECIFY COLOR
100	023913	DOOR CLADDING, K 599 0F, HESTAN, STAINLESS, RH	SPECIFY COLOR
101	023914	DOOR CLADDING, K 599 0F, HESTAN, STAINLESS, LH	SPECIFY COLOR
106	023919	VENTILATION GRILLE, K 599, STAINLESS	
107	023920	VENTILATION GRILLE, K 749, STAINLESS	
112	023925	SLIDING GUIDE, FRESCO DRAWER, LH	

BALLOON #	HESTAN P/N	DESCRIPTION	NOTES
113	023926	SLIDING GUIDE, FRESCO DRAWER, RH	
121	023934	FRONT WHEEL, COMPLETE	
122	023935	REAR WHEEL, COMPLETE	
129	023942	CEILING GLASS, 749	
130	023943	CEILING GLASS, 599	
136	023949	HINGE, CFV, LH	
137	023950	HINGE, CFV, RH	
140	023953	INT TOP PIECE, 84 INCH, 749	
142	023955	INT TOP PIECE, 84 INCH, 599	
144	023957	DOOR SHELF, HESTAN, 749	
145	023958	DOOR SHELF, HESTAN, 599	
147	023960	GLASS SHELF, HESTAN, 749	
149	023962	GLASS SHELF, HESTAN, 599	
153	023966	SEPARATOR GLASS SHELF, HESTAN, 749	
154	023967	SEPARATOR GLASS SHELF, HESTAN, 599	
157	023970	FRESCO DRAWER, SMALL, HESTAN, 749	
158	023971	FRESCO DRAWER, LARGE, HESTAN, 749	
159	023972	FRESCO DRAWER, SMALL, HESTAN, 599	
160	023973	FRESCO DRAWER, LARGE, HESTAN, 599	
165	023978	DOOR COMPLETE, 0FR K 599, HESTAN, STAINLESS, RH	SPECIFY COLOR
166	023979	DOOR COMPLETE, 0FR K 599, HESTAN, STAINLESS, LH	SPECIFY COLOR
167	023980	DOOR COMPLETE, 0FR K 749, HESTAN, STAINLESS, RH	SPECIFY COLOR
168	023981	DOOR COMPLETE, 0FR K 749, HESTAN, STAINLESS, LH	SPECIFY COLOR
183	023996	DOOR COMPLETE, 0FR INT 599, RH	SPECIFY COLOR
184	023997	DOOR COMPLETE, 0FR INT 599, LH	SPECIFY COLOR
185	023998	DOOR COMPLETE, 0FR INT 749, RH	SPECIFY COLOR
186	023999	DOOR COMPLETE, 0FR INT 749, LH	SPECIFY COLOR
201	020055	MANUAL, USE & CARE, REFRIGERATION	
202	020056	MANUAL, INSTALLATION, REFRIGERATION	
204	034490	KIT, ANTI-TIP BRACKETS, INDOOR REFRIGERATOR	
207	034495	KIT, OVERLAY DOOR HARDWARE, KRC/KFC	
233	035827	DOOR SWITCH, MAGNETIC REED, BR-1011	All models after July 2019
241	035836	USER INTERFACE, TFT, HESTAN, (**ALL 24" EXCEPT KWC/KRW**)	Serial Number 202002 and later
242	035837	USER INTERFACE, TFT, HESTAN, (**ALL 30" EXCEPT KWC/KRW**)	Serial Number 202002 and later
243	035838	USER INTERFACE, TFT, HESTAN, (**ALL 36" EXCEPT KWC/KRW**)	Serial Number 202002 and later
248	020656	ENDCAP, HANDLE, LH, INDOOR REFRIGERATOR	
249	020657	ENDCAP, HANDLE, RH, INDOOR REFRIGERATOR	
250	020672	HANDLE, INDOOR REFRIGERATOR, 40"	
253	024014	LCD CONTROL PANEL w/PCB, UPPER (**KRC24**)	Serial Number before 202002
254	024015	LCD CONTROL PANEL w/PCB, UPPER (**KRC30**)	Serial Number before 202002
256	035812	MAIN POWER BOARD, 504 EVO 1V FR (**KRC**)	Serial Number 202002 and later
260	037139	COVER, DOOR ADJUSTMENT SCREWS, GRAY	-OV MODELS ONLY
261	049013	DOOR SWITCH, REED SERVICE SPACER, GRAY, FHIABA	Kit for Reed Switch Repair

HESTAN

PROPRIETARY
NO PART OF THIS DOCUMENT MAY BE REPRODUCED, STORED IN A RETRIEVAL SYSTEM, OR TRANSMITTED IN ANY FORM, WITHOUT THE WRITTEN PERMISSION OF Hestan Commercial Corporation. THIS DOCUMENT OR ANY COPIES SHALL BE RETURNED UPON WRITTEN REQUEST.

DESCRIPTION: **SERVICE, REFRIGERATOR, COLUMN, (KRCx24/KRCx30)**

DRAWING NO: **KRC-SERVICE**

REVISION: **F**