SERIES NAME	A	B
RS-CANTILEVER-SERIES-C8	8 FT (2438 mm)	5'-3 11/16" (1618 mm)
RS-CANTILEVER-SERIES-C9	9 FT (2743 mm)	4'-11 13/16" (1519 mm)
RS-CANTILEVER-SERIES-C10	10 FT (3048 mm)	4'-7 7/8" (1420 mm)
RS-CANTILEVER-SERIES-C11	11 FT (3353 mm)	4'-4" (1321 mm)
RS-CANTILEVER-SERIES-C12	12 FT (3658 mm)	4'-1/8" (1222 mm)

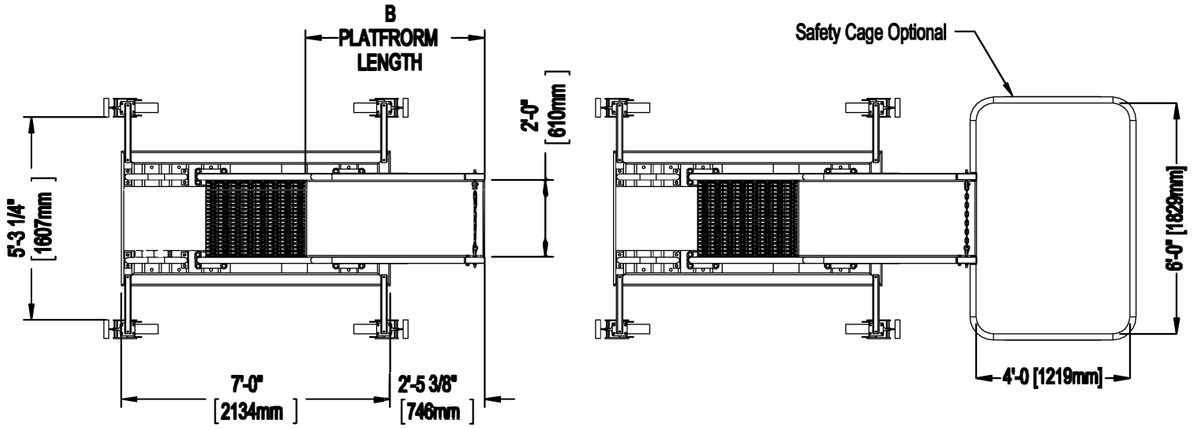

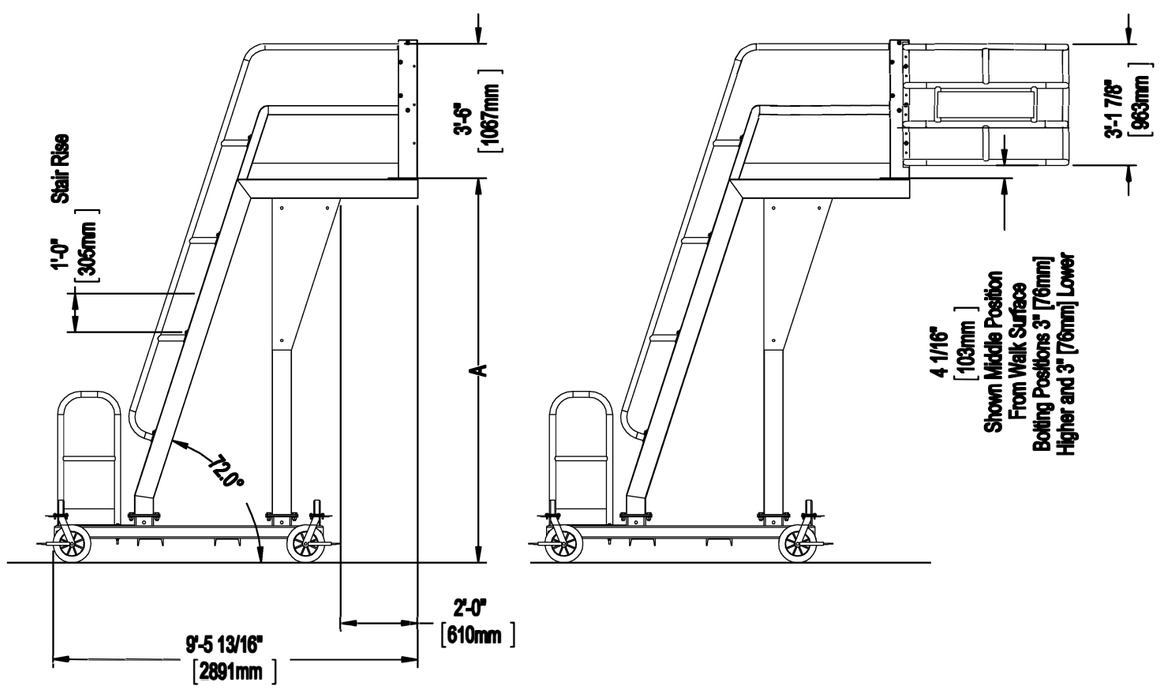

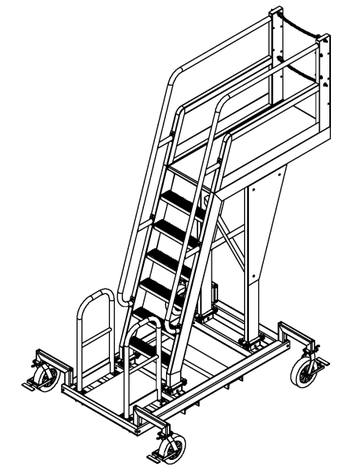

RS-CANTILEVER-SERIES-C8

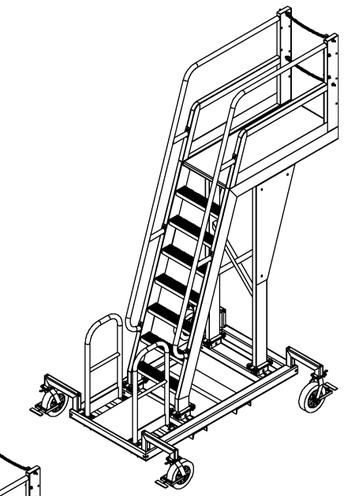

RS-CANTILEVER-SERIES-C9

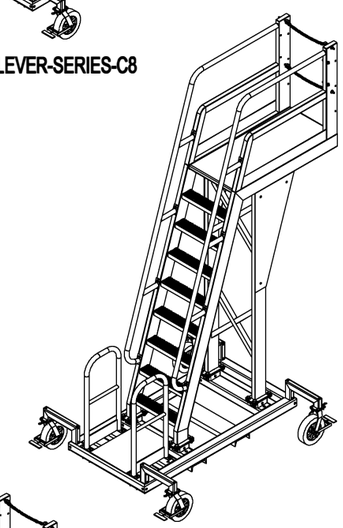

RS-CANTILEVER-SERIES-C10

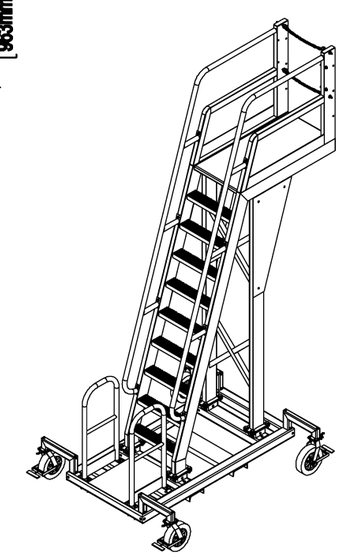

RS-CANTILEVER-SERIES-C11

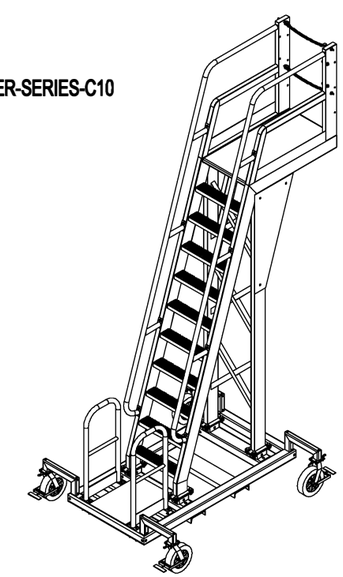

RS-CANTILEVER-SERIES-C12

ALL DIMENSIONS CONFIRMED BEFORE FABRICATION AND A PROFESSIONAL ENGINEER MUST BE ENGAGED IN ANY FORM WHATSOEVER IN ANY FORM WHATSOEever CONSIDER OF ROLLASTEP

PART NAME: RS-CANTILEVER-SERIES-C10

DRAWN BY: TK DATE: 1/9/12
CHECKED BY: TK DATE: 1/9/12
APPROVED BY: TK DATE: 1/9/12
PROJECT: DATE:
PROJECT NO.: DATE:
SCALE: 1:48
SHEET: 1

ROLLASTEP WELDING STANDARDS
SEAL WELD ALL SEAMS UNLESS NOTED
WELDS FILLED & SANDED BELOW FINISHED SURFACE

Welding Symbol	Weld Size	Weld Length
Fillet Weld	3/16" (5)	1" (25)
Fillet Weld	1/4" (6)	2" (50)
Fillet Weld	5/16" (8)	3" (75)
Fillet Weld	3/8" (10)	4" (100)

ROLLASTEP
WWW.ROLLASTEP.COM 888-876-1839

JOB #: ASME #: 11703
CUSTOMER: RS-CANTILEVER-SERIES-C10