16574

Call Us First!
DO NOT RETURN TO STORE.

For immediate help with assembly or product information

call our toll free number:
1-800-844-9273
or email:

customerservice@yardline.net

Our staff is ready to provide assistance
M-F 8:00 AM to 6:00 PM EST
Saturday 8:30 AM to 5:00 PM EST

(This page intentionally left blank.)

16574	05/09/2016

YardLine
GREAT IDEAS MADE SIMPLE™

A Backyard Products Company

CRESTWOOD GABLE 8' x 14' (244 x 426,7 cm)

ACTUAL FLOOR SIZE IS 96 x 168" (243,8 x 426,7 cm)

KEEP THIS MANUAL FOR FUTURE REFERENCE

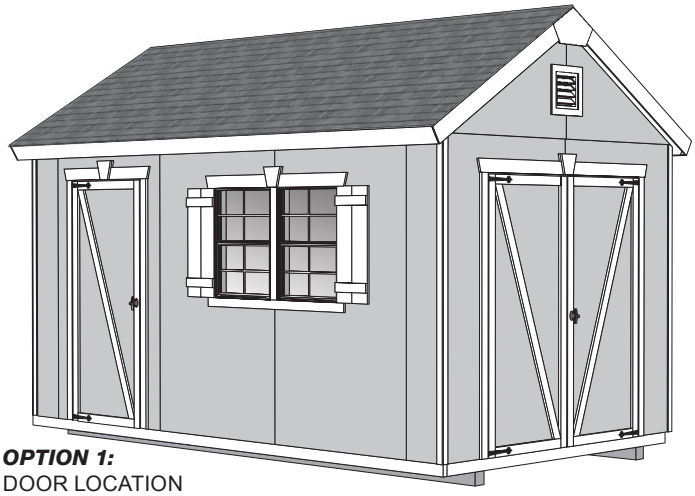

OPTION 1:
DOOR LOCATION
LEFT SIDE OF FRONT WALL

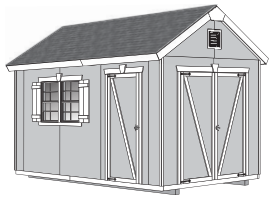

OPTION 2:
DOOR LOCATION
RIGHT SIDE OF FRONT WALL

⚠ *IMPORTANT!* ⚠

READ INSTRUCTIONS THOROUGHLY PRIOR TO BEGINNING ASSEMBLY.

BEFORE YOU BEGIN

- **BUILDING RESTRICTIONS AND APPROVALS**

  Be sure to check with local building department and homeowners association for specific restrictions and/ or requirements before building.

- **ENGINEERED DRAWINGS**

  Contact our Customer Service Team if engineered drawings are needed to pull local permits.

- **SURFACE PREPARATION**

  To ensure proper assembly you must build your shed on a level surface. Recommended methods and materials to level your shed are listed on page 9.

- **CHECK ALL PARTS**

  Inventory all parts listed on pages 3 - 7. Contact our Customer Service Team if any parts are missing or damaged.

- **ADDITIONAL MATERIALS**

  You will need additional materials to complete your shed. See page 8 for required and optional materials and quantities.

- CUSTOMER SERVICE -

Call: 1-800-844-9273 email: customerservice@yardline.net

TOOLS

Required

- ❑ Phillips Screwdriver
- ❑ Drill / Driver
  - ❑ 1/8" Drill Bit
  - ❑ 1/4" Drill Bit
  - ❑ 5/16" Drill Bit
  - ❑ 1/2" Drill Bit
  - ❑ #2 Philips Drive Bit
- ❑ Hammer
- ❑ Level
- ❑ Pencil
- ❑ Tape Measure
- ❑ Square or
- ❑ Utility Knife
  - ❑ Shingle Blades
- ❑ Caulk Gun
- ❑ Paint Tools
- ❑ Safety Glasses
- ❑ Hand Saw
- ❑ Ladder

Optional

- ❑ Tool Belt/ Nail Pouch
- ❑ Tin Snips (for drip edge)
- ❑ Chalk Line
- ❑ Nail Gun
  - • gun nails
- ❑ Gloves

Safety! Always use approved safety glasses during assembly.

HELPFUL REMINDER SYMBOLS

Look for these symbols for helpful reminders throughout this manual.

= Assistance Required; two or more people.

= Ensure squareness.

= Important required step or operation.

= Helpful assembly hint.

= Mark part with pencil.

BEGIN = Beginning of steps for assembly or installation.

FINISH = You have finished the assembly or installation.

= Level

ORIENT LUMBER AND TRIM FOR BEST APPEARANCE

Framing lumber is graded for structural strength and not appearance. Exterior trim is graded for one good side.

Always install the material leaving the best edge and best surface visible. Please remember that these blemishes in no way negatively affect the strength or integrity of our product. (See Fig. **A**, **B**, **C**.)

A

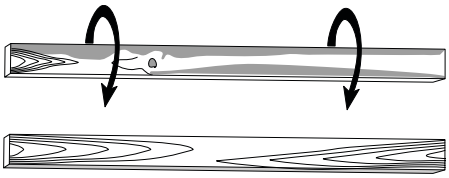

B

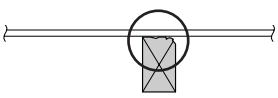

C

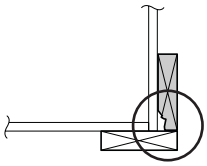

PARTS IDENTIFICATION AND SIZES

Part identification letters are stamped on some parts.

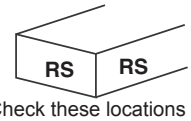

Check these locations for part stamp.

WOOD SIZE CONVERSION CHART

Nominal Board Size	Actual Size
2" x 4"	1-1/2" x 3-1/2" (3,8 x 8,9 cm)
1" x 4"	3/4" x 3-1/2" (1,9 x 8,9 cm)
2" x 3"	1-1/2" x 2-1/2" (3,8 x 6,3 cm)
1" x 3"	3/4" x 2-1/2" (3,8 x 6,3 cm)

PARTS LIST

INVENTORY YOUR PARTS before you begin.

We suggest sorting parts by the category they are listed in.

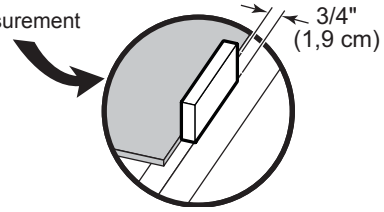

WALLS

- ☐ x1 GAA 1 x 3 x 5" (2,5 x 7,6 x 12,7 cm) Gauge Block for 3/4" (1,9 cm) measurement
- ☐ x2 PVA 2 x 4 x 6" (5,1 x 10,2 x 15,2 cm)
- ☐ x4 CPA 2 x 4 x 8-1/2" (5,1 x 10,2 x 21,6 cm)
- ☐ x5 PWA 2 x 4 x 10" (5,1 x 10,2 x 25,4 cm)
- ☐ x2 AJ 2 x 4 x 12-1/2" (5,1 x 10,2 x 31,8 cm)
- ☐ x2 ABA 2 x 4 x 20" (5,1 x 10,2 x 50,8 cm)
- ☐ x6 AO 2 x 4 x 22-1/2" (5,1 x 10,2 x 57,1 cm)
- ☐ x2 QT 2 x 4 x 35" (5,1 x 10,2 x 88,9 cm)
- ☐ x1 UX 2 x 4 x 64" (5,1 x 10,2 x 162,6 cm)
- ☐ x2 YFA 2 x 4 x 68-1/2" (5,1 x 10,2 x 174 cm)
- ☐ x3 TM 2 x 4 x 72" (5,1 x 10,2 x 182,9 cm)
- ☐ x24 TK 2 x 4 x 80" (5,1 x 10,2 x 203,2 cm)
- ☐ x3 SZ 2 x 4 x 89" (5,1 x 10,2 x 226,1 cm)
- ☐ x4 TP 2 x 4 x 96" (5,1 x 10,2 x 243,8 cm)

RAFTERS

- ☐ x14 6 x 24" (15,2 x 61 cm) **OSB OR WOOD GRAIN** ⚠
- ☐ x2 JF 1 x 4 x 60" (1,6 x 10,2 x 152,4 cm)
- ☐ x16 ASA 2 x 4 x 63-7/8" (5,1 x 10,2 x 162,2 cm)

TRIM

- ☐ x2 3/8 x 10 x 17" (1 x 25,4 x 43,2 cm)
- ☐ x4 3/8 x 4-3/4 x 54-5/8" (1 x 12,1 x 138,7 cm)
- ☐ x2 3/8 x 4-3/4 x 64-1/8" (1 x 12,1 x 162,9 cm)
- ☐ x2 3/8 x 4-3/4 x 64-1/8" (1 x 12,1 x 162,9 cm)
- ☐ x4 ATA 2 x 4 x 64-1/8" (5,1 x 10,2 x 162,9 cm)
- ☐ x2 3/8 x 4-7/8 x 73-1/2" (1 x 12,4 x 186,7 cm)
- ☐ x2 3/8 x 4-3/4 x 77-1/4" (1 x 12,1 x 196,2 cm)
- ☐ x8 3/8 x 1-3/4 x 81-1/2" (1 x 4,4 x 207 cm)
- ☐ x2 3/8 x 4-7/8 x 96" (1 x 12,4 x 243,8 cm)
- ☐ x2 3/8 x 4-3/4 x 96" (1 x 12,1 x 243,8 cm)

WINDOW TRIM, DOOR TRIM & SHUTTERS

- ☐ x3 JTA 19/32 x 6-7/16 x 2" (1,5 x 16,4 x 5,1 cm)
- ☐ x3 NRA 19/32 x 6-7/16 x 5-1/2" (1,5 x 16,4 x 14 cm)
- ☐ x4 DJA 19/32 x 2-1/2 x 11" (1,5 x 6,3 x 27,9 cm)
- ☐ x1 AZ 19/32 x 2-1/2 x 30-1/8" (1,5 x 6,3 x 76,5 cm)
- ☐ x4 DHA 19/32 x 5-1/2 x 30-1/8" (1,5 x 14 x 76,5 cm)
- ☐ x1 DDA 19/32 x 3-1/2 x 40" (1,5 x 8,9 x 101,6 cm)
- ☐ x1 AUA 19/32 x 2-1/2 x 53" (1,5 x 6,3 x 134,6 cm)
- ☐ x1 DEA 19/32 x 3-1/2 x 55" (1,5 x 8,9 x 139,7 cm)
- ☐ x3 OO 1-1/4 x 2-1/2 x 69" (3,2 x 6,3 x 175,3 cm)
- ☐ x2 LRA 1 x 4 x 69-3/4" (2,5 x 10,2 x 177,2 cm)
- ☐ x1 DGR 19/32 x 2-1/2 x 70-7/8" (1,5 x 6,3 x 180 cm)
- ☐ x2 DGL 19/32 x 2-1/2 x 70-7/8" (1,5 x 6,3 x 180 cm)
- ☐ x1 DFA 19/32 x 3-1/2 x 72" (1,5 x 8,9 x 182,9 cm)
- ☐ x1 ZJ 19/32 x 2-1/2 x 72" (3,2 x 6,3 x 182,9 cm)

LOFT & SHELVES

NOTE: Panel parts are not stamped.

- ☐ x2 AED 2 x 3 x 21-3/4" (5,1 x 7,6 x 55,2 cm)
- ☐ x2 7/16 x 10-1/2 x 89" (1,1 x 26,7 x 226,1 cm)
- ☐ x1 7/16 x 26-5/8 x 89" (1,1 x 67,6 x 226,1 cm)
- ☐ x5 PT 2 x 3 x 96" (5,1 x 7,6 x 243,8 cm)
- ☐ x1 TP 2 x 4 x 96" (5,1 x 10,2 x 243,8 cm)

WALL PANELS & DOORS

NOTE: Panel parts are not stamped.

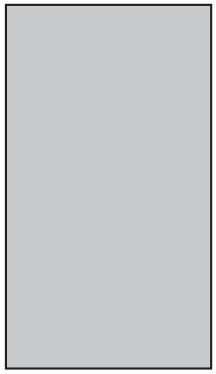

☐ **x5**
3/8 x 48 x 84"
(1 x 121,9 x 213,4 cm)

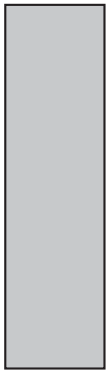

☐ **x1**
3/8 x 23-7/8 x 84"
(1 x 60,6 x 213,4 cm)

☐ **x2**
3/8 x 11-7/8 x 84"
(1 x 30,2 x 213,4 cm)

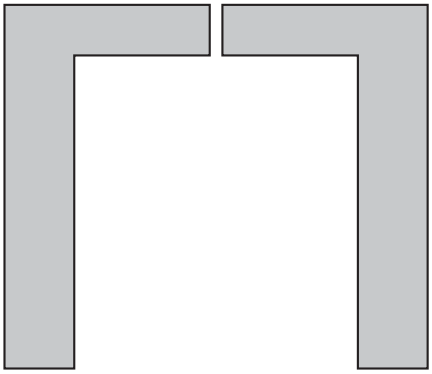

☐ **x1**
3/8 x 48 x 84"
(1 x 121,9 x 213,4 cm)

☐ **x1**
3/8 x 48 x 84"
(1 x 121,9 x 213,4 cm)

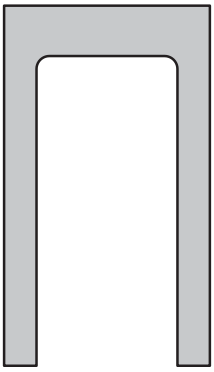

☐ **x1**
3/8 x 48 x 84"
(1 x 121,9 x 213,4 cm)

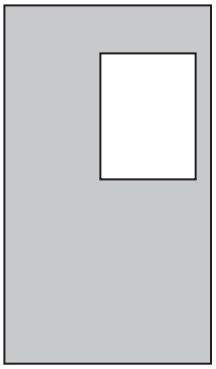

☐ **x1**
3/8 x 48 x 84"
(1 x 121,9 x 213,4 cm)

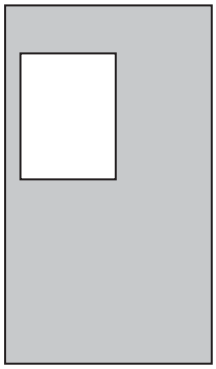

☐ **x1**
3/8 x 48 x 84"
(1 x 121,9 x 213,4 cm)

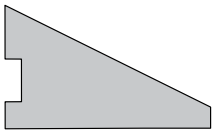

☐ **x2**

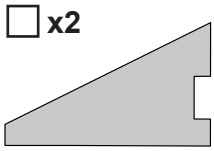

☐ **x2**

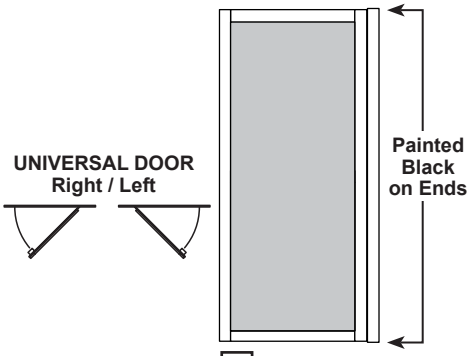

☐ **x1**

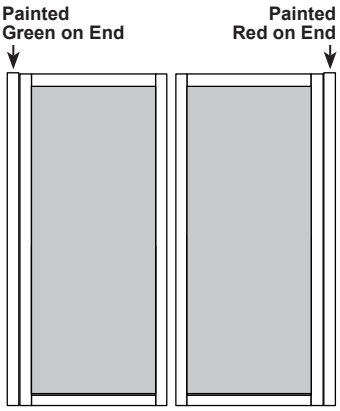

☐ **x1**
LEFT DOOR

☐ **x1**
RIGHT DOOR

FLOOR PARTS

Floor panels are 5/8" (1,6 cm) thick. **NOTE: Panel parts are not stamped.**

☐ **x2** TREATED
2 x 4 x 72" (5,1 x 10,2 x 182,9 cm)

☐ **x12** TREATED
2 x 4 x 93" (5,1 x 10,2 x 236,2 cm)

☐ **x2** TREATED
2 x 4 x 96" (5,1 x 10,2 x 243,8 cm)

Look for
TREATED
Stamp

☐ **x1**
5/8 x 23-7/8 x 96"
(1,5 x 60,6 x 243,8 cm)

☐ **x3**
5/8 x 48 x 96"
(1,5 x 121,9 x 243,8 cm)

ROOF PANELS

Roof panels are 7/16" (1,1 cm) thick. **NOTE: Panel parts are not stamped.**

☐ **x2**
7/16 x 15-7/8 x 23-7/8"
(1,1 x 40,3 x 60,6 cm)

☐ **x2**
7/16 x 15-7/8 x 48"
(1,1 x 40,3 x 121,9 cm)

☐ **x2**
7/16 x 15-7/8 x 96"
(1,1 x 40,3 x 243,8 cm)

☐ **x2**
7/16 x 48 x 71-7/8"
(1,1 x 121,9 x 182,6 cm)

☐ **x2**
7/16 x 48 x 96"
(1,1 x 121,9 x 243,8 cm)

FASTENERS & HARDWARE

FASTENER/HARDWARE BAG

- ☐ **x130** — 1-1/2" (3,8 cm)
- ☐ **x335** — 2" (5,1 cm)
- ☐ **x113** ⊕ — 3" (7,6 cm)
- ☐ **x30** ⊕ — 2" (5,0 cm)
- ☐ **x27** ⊕ — 1-5/8" (4,1 cm)
- ☐ **x100** ⊕ — 3/4" (1,9 cm)
- ☐ **x25** ⊕ — 1" (2,5 cm)
- ☐ **x7 Boxes** — 2" (5,1 cm)
- ☐ **x4 Boxes** — 3" (7,6 cm)

VENT/ DOOR HARDWARE/ WINDOWS

☐ **x2**

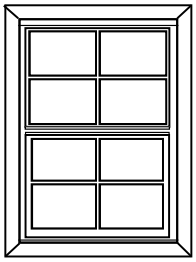

Window
22-1/4 x 29-3/4"
(56,5 x 75,6 cm)

T-Handle

☐ **x2**

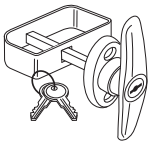

☐ **x1** — **4-1/2" Shaft**

☐ **x1** — **5-1/2" Shaft**

☐ **x4** — 1-1/2" (3,8 cm)

(2 screws in each package)

Spring Bolt

☐ **x2**

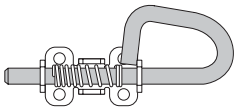

☐ **x8** — 1" (2,5 cm)

(4 screws in each package)

Vent with Frame

☐ **x2**

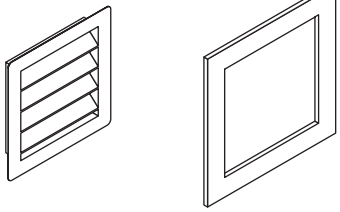

Decorative Hinges

☐ **x6**

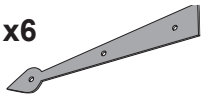

☐ **x18** — 1" (2,5 cm)

ADDITIONAL MATERIALS

FOUNDATION OR FLOOR MATERIALS

- This shed does not include any leveling materials.
- See the FLOOR LEVELING section on page 9 for recommended methods and suggested materials to properly level your floor, as this will vary depending on your specific site.
- If you choose to install your kit on a concrete slab refer to page 10.

REINFORCED WOOD FLOOR FRAME (OPTIONAL)

IMPORTANT! Depending on your specific use you may want to construct a heavy duty floor frame by adding additional floor joists (shown below as shaded). Below is a list of additional materials (not included):

☐ **x3** 2 x 4 x 8' (5 x 10 x 243,8 cm) Treated Lumber
Cut to (3) 2 x 4 x 93" (5 x 10 x 236,2 cm)

☐ **x12** ea. 3" (7,6 cm) Hot Dipped Galvanized Nails

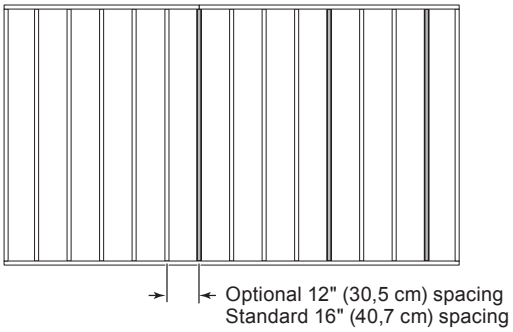

COMPLETING YOUR SHED

You will need these additional materials:

☐ **3-TAB SHINGLES ..... 7 Bundles**

☐ **PAINT FOR SIDING ..... 3 Gallons**
Use 100% acrylic latex exterior paint. (2) coats recommended.

☐ **CAULK ..... 2 Tubes**
Use acrylic latex exterior caulk that is paintable.

☐ **1" GALVANIZED ROOFING NAILS.... 3 Lbs**
For shingles.

☐ **PAINT FOR TRIM ..... 3 Quarts**
Use 100% acrylic latex exterior paint.

☐ **WOOD GLUE ..... Exterior Rated**

OPTIONAL MATERIALS

☐ **DRIP EDGE ..... 60 Feet**

☐ **#15 ROOFING FELT**
To cover 160 Sq. Ft. of roof area.

☐ **1" GALVANIZED ROOFING NAILS.....1/4 Lb**
For roofing felt.

REFER TO THE BACK OF THIS MANUAL AND THE MANUFACTURER'S INSTRUCTIONS FOR INSTALLATION OF SHINGLES, DRIP EDGE AND FELT.

OPTIONAL WOOD FRAME FLOOR LEVELING OPTIONS

There are multiple ways to level your floor frame. Our recommended leveling method is shown below.
Leveling materials are not included in this kit.

PREFERRED METHOD - 4x4 TREATED RUNNERS (Typical for 8' x 14' Kit)

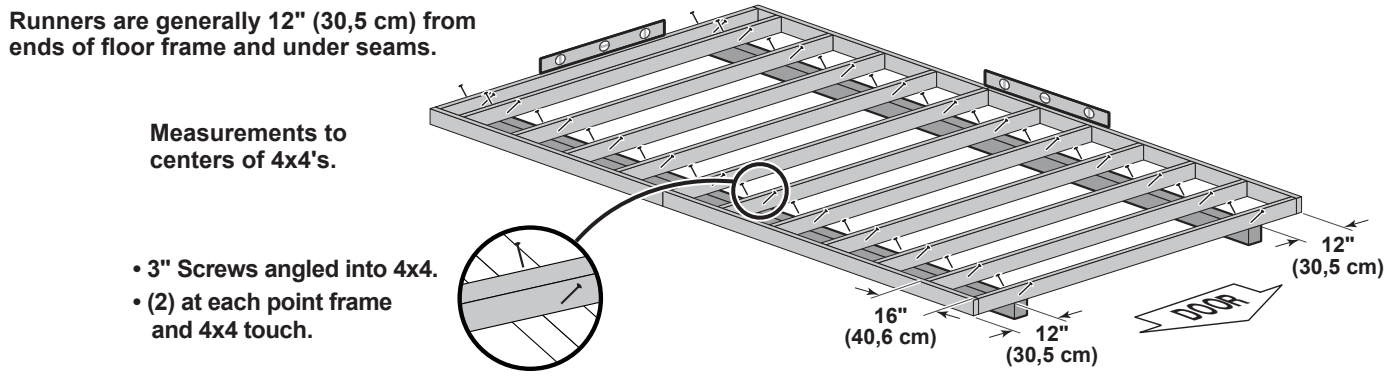

MATERIAL REQUIRED

☐ **x2** 4" x 4" x 14' (10,2 x 10,2 x 426,7 cm) Treated Lumber

Fasteners for Frame to 4"x 4".

(3" Screws shown as one option.)
Minimum 3" screws / exterior grade.

☐ **x48** 3" (7,6 cm)

⚠ **Use only wood treated for ground contact and fasteners approved for use with treated wood.**

⚠ **Always support frame seams.**

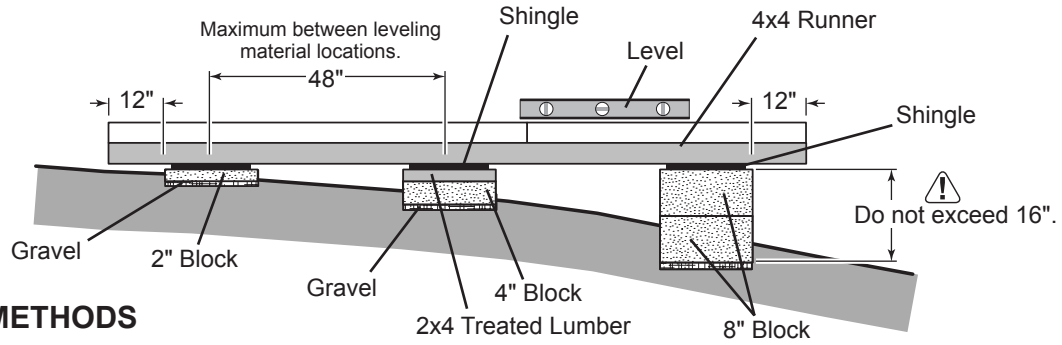

LEVELING METHODS

- Level under 4x4 runners only.
- Locate leveling material 12" from ends of runners and no more than 48" apart.
- Asphalt shingles should be used between 4x4 runners and blocks or treated lumber. Never use shingles in direct contact with ground.
- For best results and aiding in water drainage use gravel under each concrete block.

LEVELING MATERIALS

☐ Gravel

☐ Solid Masonry Blocks in 1", 2", 4" or 8" thickness

☐ 2x4 Treated Lumber

☐ Asphalt Shingles

⚠ **Leveling higher than 16" not recommended.**

CONCRETE

- If you are building your shed on a concrete foundation see the following page.

CONCRETE FOUNDATION

Your kit contains all materials to construct a wooden floor. If you choose to install your kit on a concrete slab refer to the diagram below.

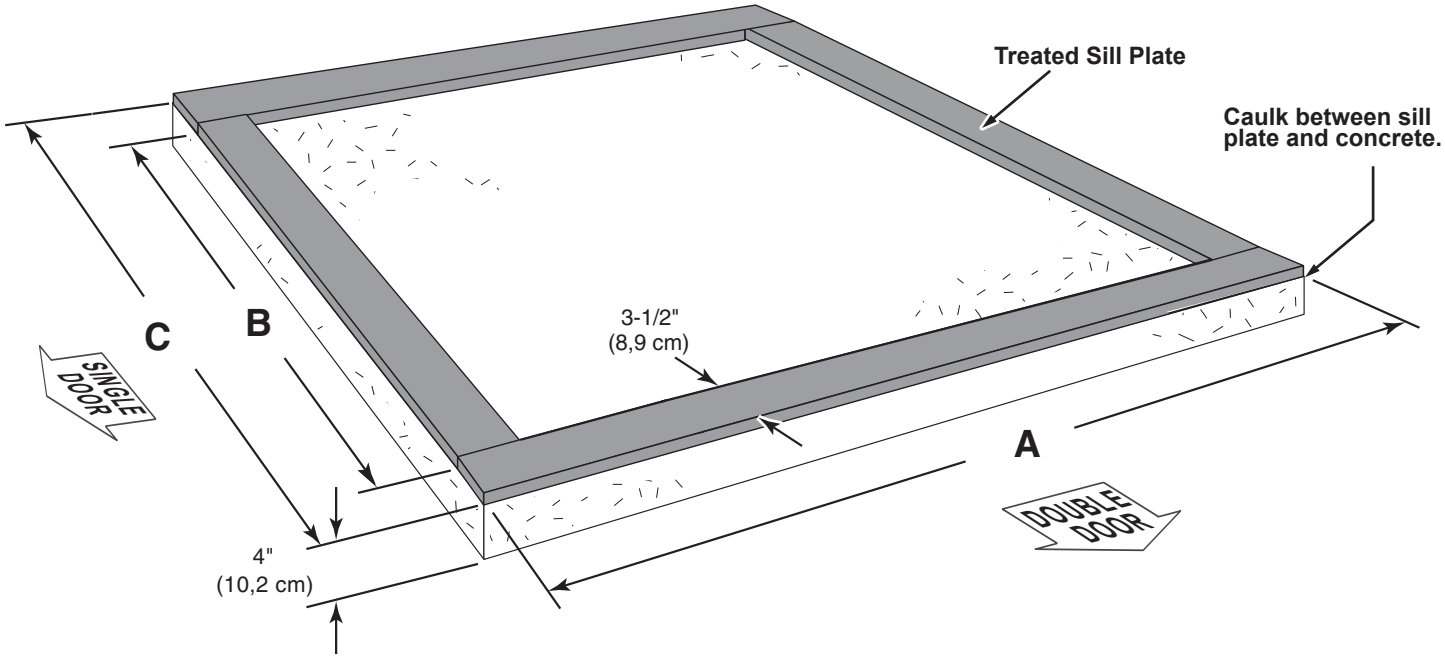

Building Size	Actual Size	A	B	C
8' x 14' (243,8 x 365,8 cm)	96" x 168" (243,8 x 426,7 cm)	96" (243,8 cm)	161" (408,9 cm)	168" (426,7 cm)

Requires:

- ☐ **x2** 2" x 4" x 14' (5,1 x 10,2 x 365,8 cm) ⚠ **MUST be treated lumber.**
- ☐ **x2** 2" x 4" x 8' (5,1 x 10,2 x 244 cm) ⚠ **MUST be treated lumber.**
- ☐ **x1** Caulk

⚠ Allow new concrete slabs to cure for at least seven (7) days.

- A treated 2 x 4" (5,1 x 10,2 cm) sill plate is required when installing your shed on concrete.
  Hint: Purchase full length treated lumber.
- Use a high quality exterior grade caulk beneath all sill plates.
- Fasten 2 x 4" (5,1 x 10,2 cm) sill plates to slab using approved concrete anchors **(fasteners not included)**.
- Check local code for concrete foundation requirements.

NOTES

FLOOR FRAME

PARTS REQUIRED:

x12 TREATED
2 x 4 x 93" (5,1 x 10,2 x 236,2 cm)

x2 TREATED
2 x 4 x 96" (5,1 x 10,2 x 243,8 cm)

x2 TREATED
2 x 4 x 72" (5,1 x 10,2 x 182,9 cm)

x44
3" (7,6 cm)

Look for
TREATED
Stamp

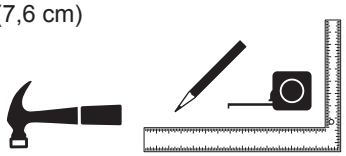

✓**BEGIN**

1 Orient parts as shown on flat surface. Measure and mark.

Use two 3" nails at each mark.

HINT:
For easier nailing stand on frame.

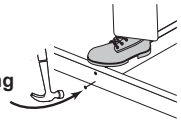

FINISH

You have finished your floor frame. Proceed to level and square frame.

168" (426,7 cm)
160" (406,4 cm)
144" (365,8 cm)
128" (325,1 cm)
112" (284,5 cm)
72" (182,9 cm)
96" (243,8 cm)
80" (203,2 cm)
64" (162,6 cm)
48" (121,9 cm)
32" (81,3 cm)
16" (40,6 cm)

Flush
Center on marks
Flush
TOENAILING
96" (243,8 cm)
93" (236,2 cm)
Flush
Flush
72" (182,9 cm)
96" (243,8 cm)

STOP!

⚠ LEVEL AND SQUARE FLOOR FRAME ⚠

Before attaching floor decking, it is important to level and square the floor frame.

A level and square floor frame is required to correctly construct your shed.

STOP!

✓BEGIN

1. ⚠ See page 9 for the preferred floor leveling method.

2. Use level and check the frame is level before applying floor panels.

   Check for frame squareness by measuring diagonally across corners. If the measurements are the same, the frame is square. The diagonal measurement will be approximately 193-1/2" (491,5 cm).

3. When the frame is level and square secure one side of frame to the 4x4 runners using one fastener at ends of each runner. Move to the opposite end of the frame. Secure the frame to 4x4 runners with one fastener at ends of each runner making sure the frame remains square (Fig. A).

FINISH

4. Once the floor frame is level and square fasten the frame to the 4x4 runners at each point the frame contacts the 4x4 runners.

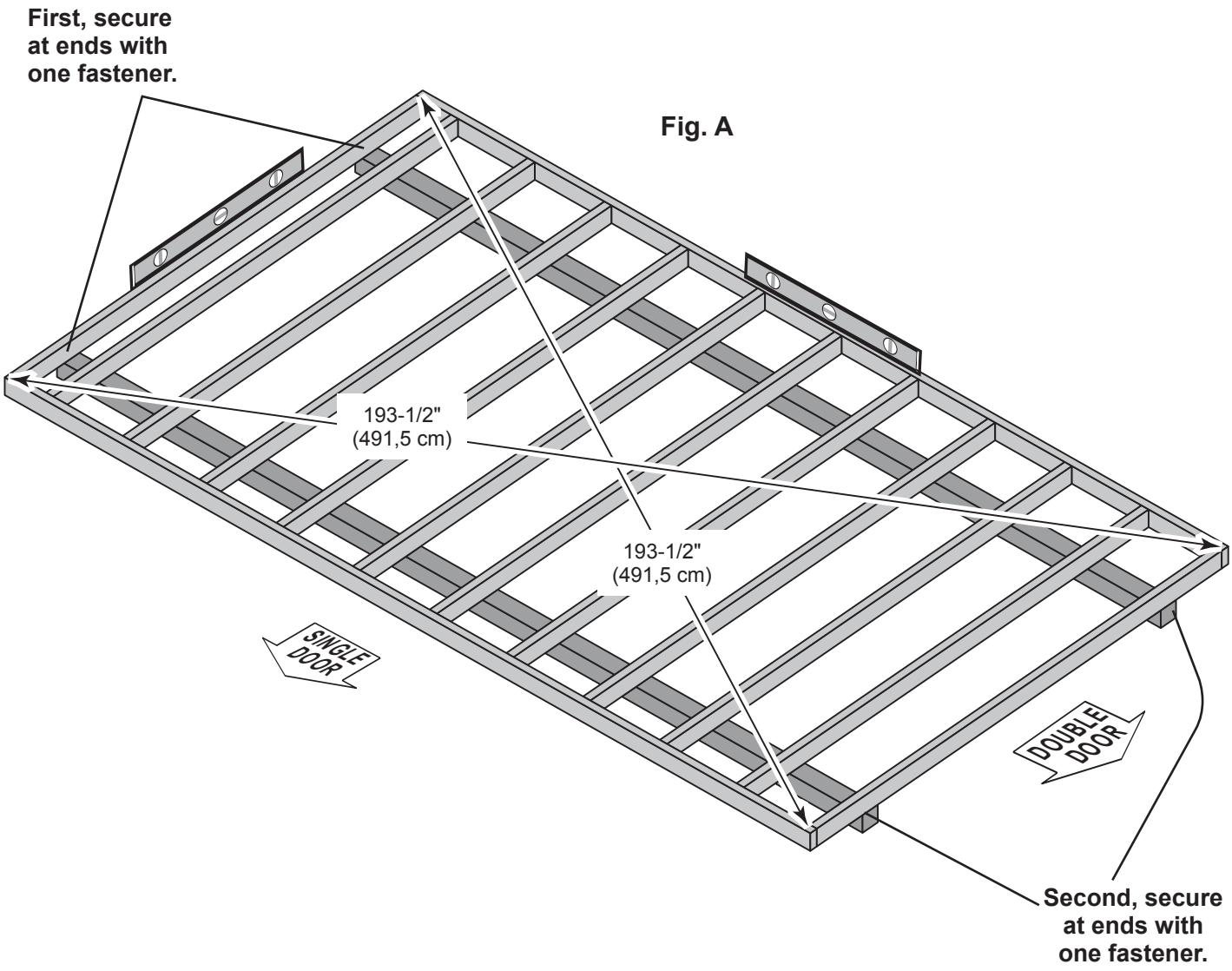

Fig. A

FLOOR PANELS

PARTS REQUIRED:

x1 5/8 x 48 x 96"
(1,6 x 121,9 x 243,8 cm)

x219 2" (5,1 cm)

Ensure your floor frame is square by installing one panel and squaring frame.

✓BEGIN

1. Attach the 48 x 96" panel with the rough side up (painted-grid lines side) with the 48" edge and corner flush to the floor frame **(Fig A)**. Secure panel with two 2" nails in the corners.

2. Move to the opposite side.
Using the long edge of the panel as a lever,
move the panel side-to-side until the top corner is flush
to the floor frame **(Fig. B)**.
Secure panel with two 2" nails in the corners.

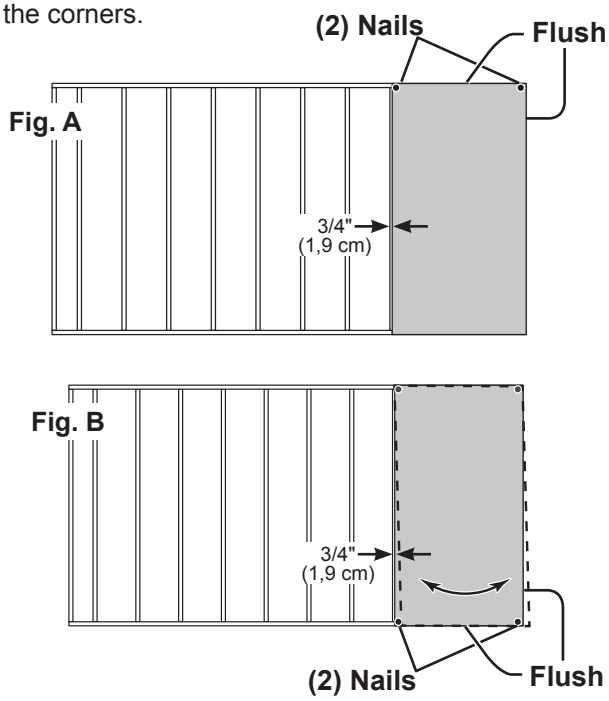

3. Continue attaching the panel using 2" nails 6" apart on edges and 12" apart inside panel.
Use a chalk line or use pre-painted grid lines to nail into joists under panel.

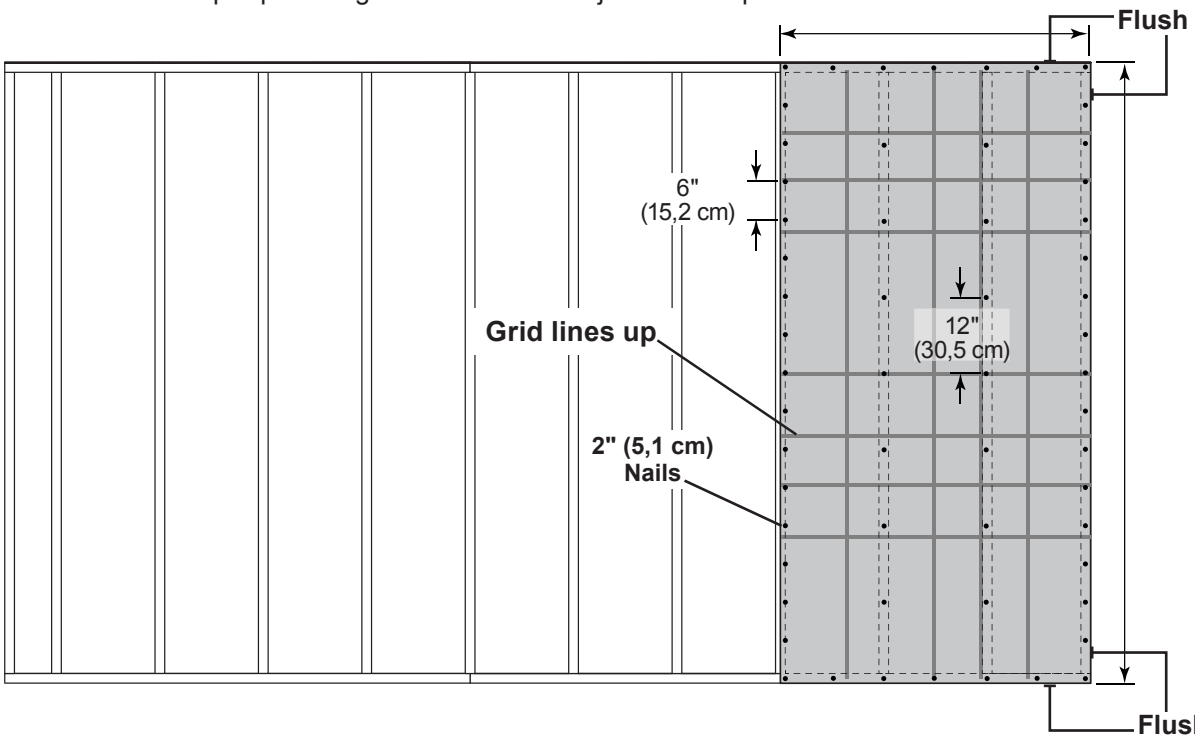

FLOOR PANELS

PARTS REQUIRED:

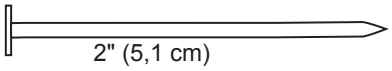

x1 5/8" x 23-7/8" x 96" (1,6 x 60,6 x 243,8 cm)

x2 5/8" x 48" x 96" (1,6 x 121,9 x 243,8 cm)

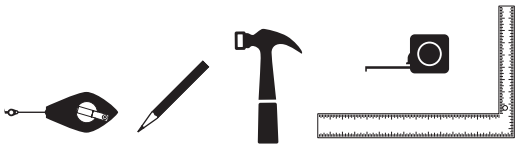

4 Continue installing panels with rough side up (painted grid lines).

Use a chalk line or use pre-painted grid lines on panel for 2" nails 6" apart on edges, and 12" apart inside panels.

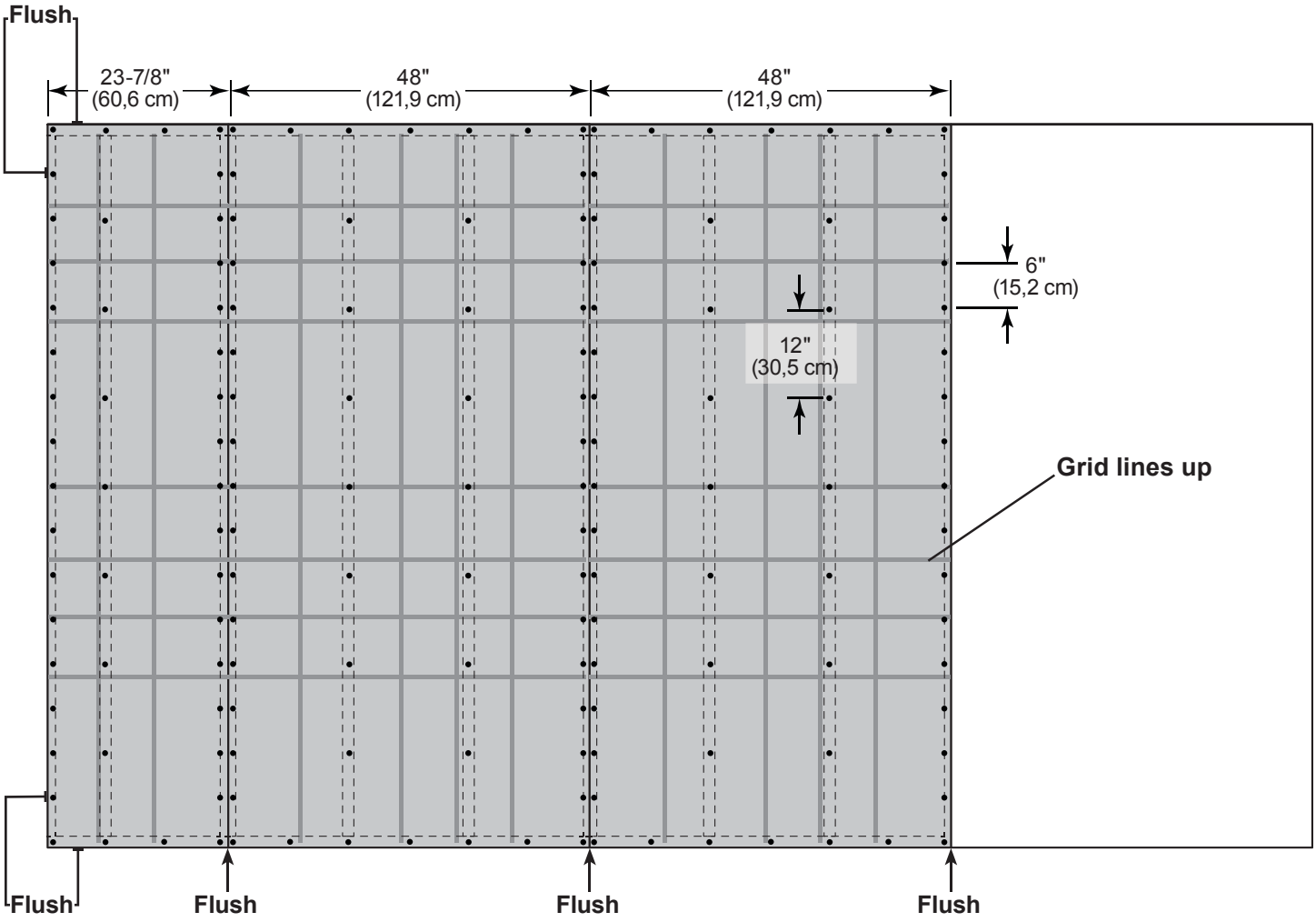

FINISH

You have finished attaching your floor panels.

IMPORTANT!

STOP! **Check the floor frame is level after installing floor panels. Re-level if needed.**

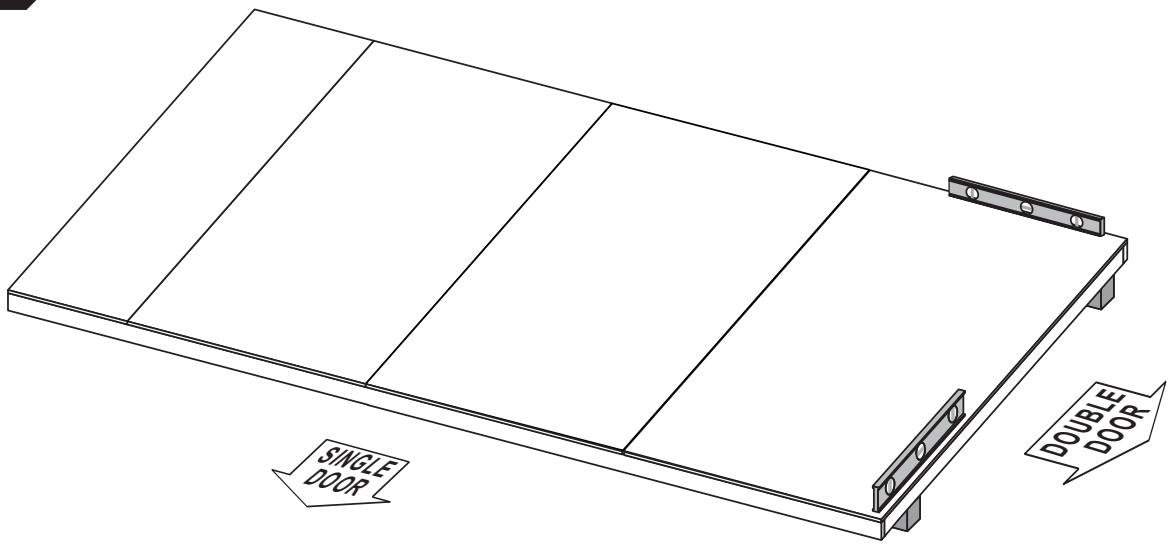

HINT:

- **The floor should be used as a stable work surface for wall construction.**
- **Organize your assembly procedure during the build process to avoid over-handling of the walls.**

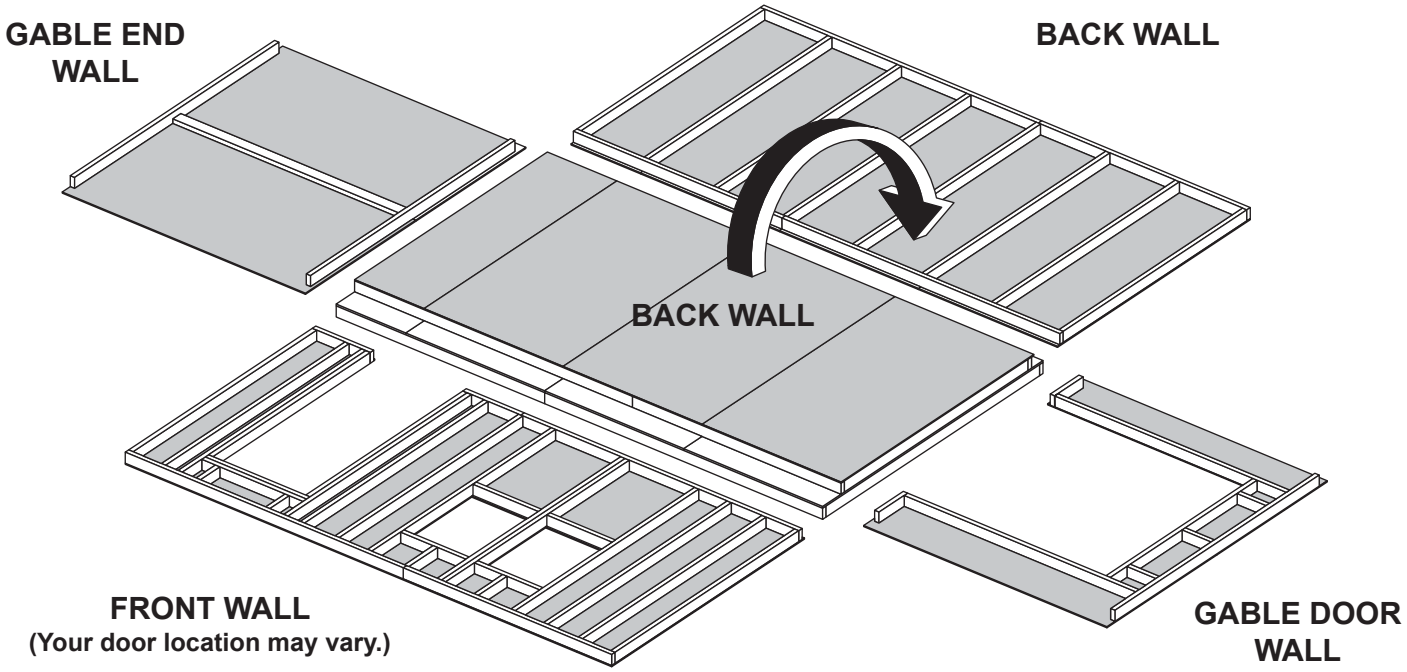

RAFTER ASSEMBLY

PARTS REQUIRED:

x3 **CPA** 2 x 4 x 8-1/2" (5,1 x 10,2 x 21,6 cm)

x6 3" (7,6 cm)

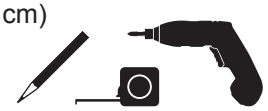

You will build a rafter jig using the floor and three **CPA** parts as shown.

BEGIN

1 Secure one **CPA** flush to the floor deck using two 3" screws.
Measure over 96-3/4" and install a second **CPA** flush to the floor deck. **CPA** will overhang the floor.
Secure using two 3" screws.

2 Measure over 48" and up 35-3/16" from the floor edges and secure **CPA** using two 3" screws.
Check **CPA** is 35-3/16" at both ends for squareness.

Fig. A

96" (243,8 cm) Floor Width

48" (122 cm)

CPA

35-3/16" (89,4 cm)

35-3/16" (89,4 cm)

(2) 3" (7,6 cm) Screws in each CPA

There will be an overhang on this end.

3/4" (1,9 cm)

Flush

CPA

Flush

CPA

96-3/4" (245,7 cm) **IMPORTANT MEASUREMENT !!**

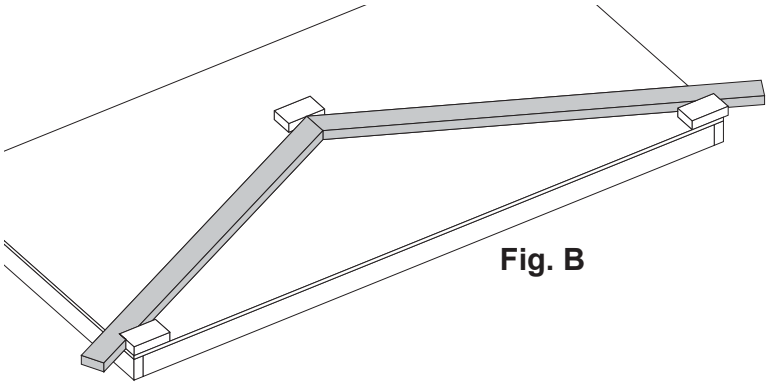

Fig. B

FINISH

You have finished rafter jig. Proceed to assemble your rafters.

RAFTER ASSEMBLY

PARTS REQUIRED:

x14 OSB OR WOOD GRAIN
6 x 24" (15,2 x 61 cm)

x16 ASA
2 x 4 x 63-7/8" (5,1 x 10,2 x 162,2 cm)

x 16 1-5/8" (4,1 cm)

x 168 2" (5,1 cm)

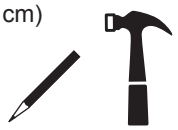

⚠ You will build 8 rafters - *Six* with 2 gussets and *Two* with only 1 gusset.

✓BEGIN

1 Place two rafters **ASA** into the jig as shown.

Keep **ASA** firm against outside **CPA**'s as shown **(Fig.A)** and push rafters tight to the middle **CPA**. Rafters should touch at tips **(Fig. A)**.

Apply glue to rafters where gusset will attach **(Fig. B)**.

Place gusset onto **ASA** holding a 1/4" gap from edge **(Fig. C)** and keeping rafters firm as instructed. Secure gusset using one 1-5/8" screw into each rafter. **HINT:** These screws will help hold the measurements when you nail on gussets.

Use ten 2" nails to finish securing the gusset to the rafters to pattern shown in **Fig. C**.

Fig. A

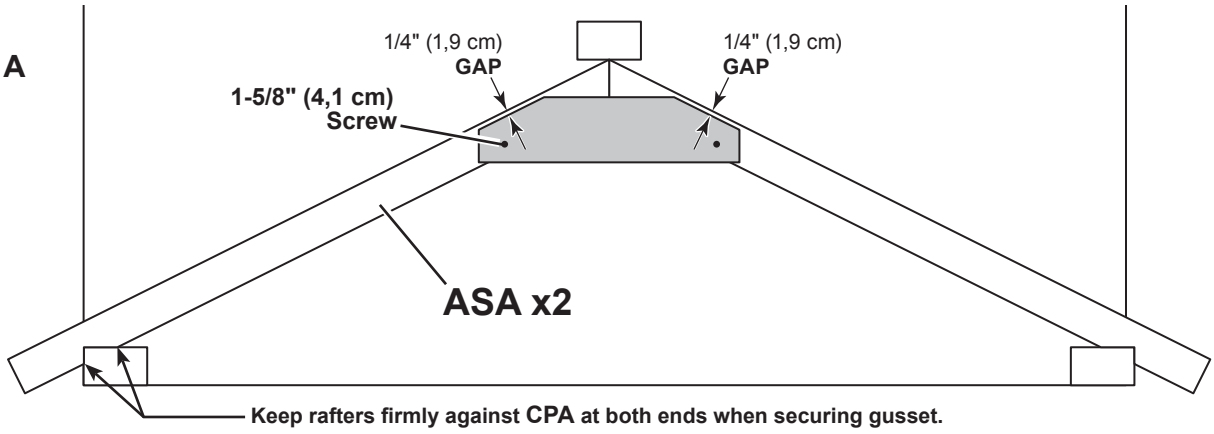

2 Flip rafters over and attach a second gusset using glue and (12) 2" nails. No need to use jig for this gusset.

3 Repeat **Steps 1 - 2** to assemble ***five*** more rafters with **2** gussets.

4 ⚠ Repeat **Step 1** to assemble ***two*** more rafters with only **1** gusset.

Remove **CPA**'s from floor.

Fig. B

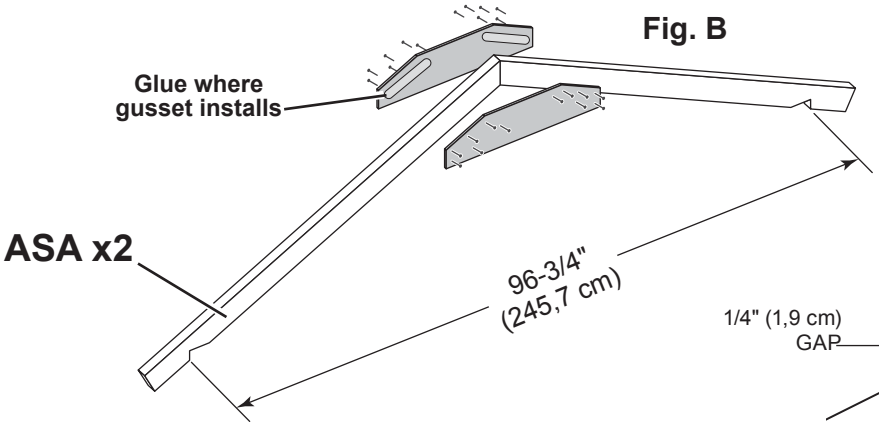

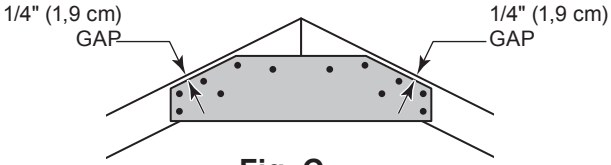

Fig. C

FINISH

You have finished assembling your rafters.

GABLE DOOR WALL

PARTS REQUIRED:

x3 PWA
2 x 4 x 10" (5,1 x 10,2 x 25,4 cm)

x2 AJ
2 x 4 x 12-1/2" (5,1 x 10,2 x 31,8 cm)

x24
3" (7,6 cm)

x2 TK
2 x 4 x 80" (5 x 10,2 x 203,2 cm)

x1 UX
2 x 4 x 64" (5,1 x 10,2 x 162,6 cm)

x1 SZ
2 x 4 x 89" (5 x 10,2 x 226,1 cm)

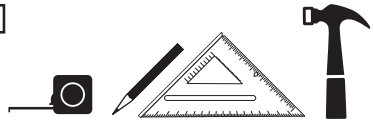

✓BEGIN

1 Orient parts on edge on floor. Measure and mark.

Use two 3" nails at each mark.

HINT:
For easier nailing stand on frame.

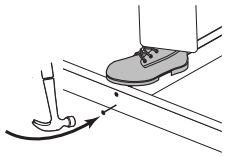

89"
(226,1 cm)

77-1/4"
(196,2 cm)

68-1/2"
(174 cm)

44-1/2"
(113 cm)

20-1/2"
(52,1 cm)

11-3/4"
(29,8 cm)

SZ

10"
(25,4 cm)

PWA x3

3" (7,6 cm)
Nails

UX

80"
(203,2 cm)

TK

TK

64"
(162,6 cm)

AJ

Flush

Flush

AJ

12-1/2"
(31,8 cm)

12-1/2"
(31,8 cm)

GABLE DOOR WALL

PARTS REQUIRED:

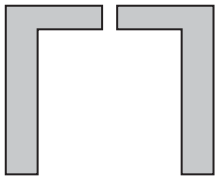

48 x 84"
(121,9 x 213,4 cm)
x1 LEFT + 1 RIGHT

x1 | **OO** | **Temporary support**
1-1/4 x 2-1/2 x 69" (3,2 x 6,3 x 175,3 cm)

x2

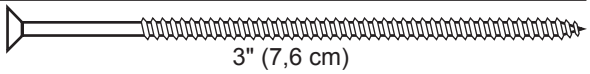

3" (7,6 cm)

x52

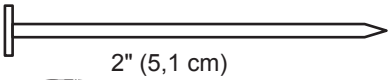

2" (5,1 cm)

2 Place left **48" x 84"** panel onto wall frame flush to top of **SZ** with primed side up as shown. Secure panel with 2" nails 6" (15,2 cm) apart.

Repeat **Step 2** to attach the right **48" x 84"** panel.

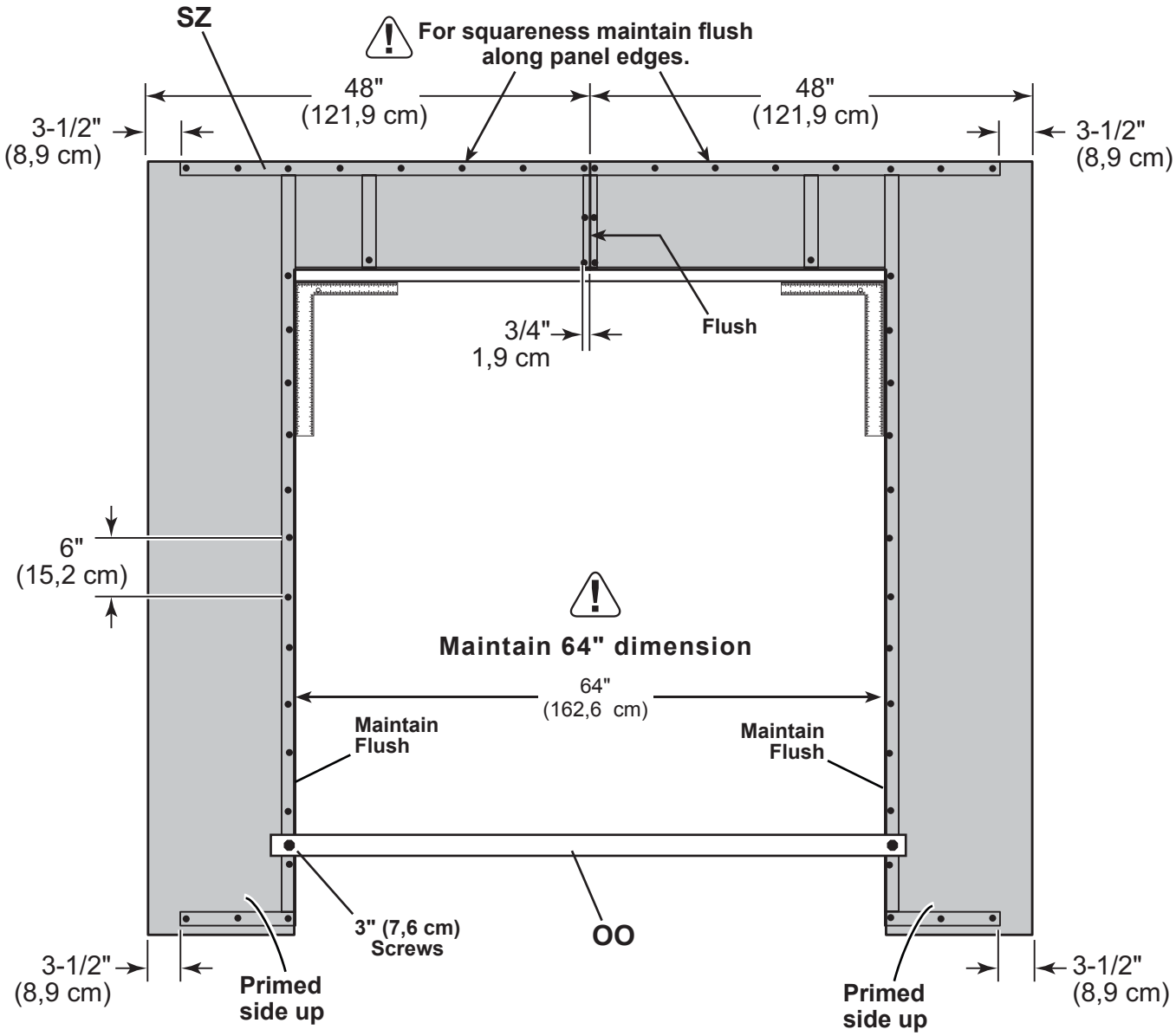

3 Attach **OO** temporary support using 3" screws into wall frame as shown.

You have finished building your gable door wall.

STOP

AS YOU FACE THE FRONT WALL, CHOOSE YOUR SINGLE DOOR LOCATION - LEFT OR RIGHT

IMPORTANT:

The single door is a reversible door and can either be left hand swing or right hand swing, depending on your preference.

The graphics referenced in this instruction show the door as a left hand swing.

If you install the door as a right hand swing, simply mirror the left hand door instructions.

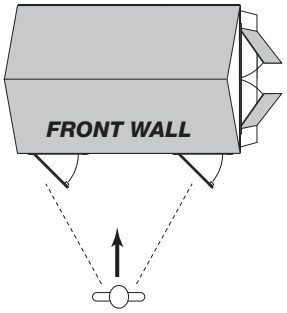

GABLE WALL DOUBLE DOORS

If you choose to install your single door on the right hand side of the shed and with a right hand swing, note the double doors and the single door will bump and interfere with each other if opened at the same time. Please be aware of this issue.

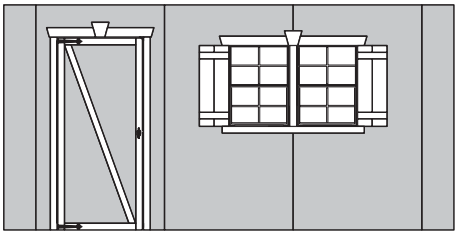

OPTION 1:
DOOR LOCATION
LEFT SIDE OF FRONT WALL

IF YOU CHOOSE TO LOCATE THE *DOOR TOWARD THE LEFT*
GO TO Page 21 TO BEGIN BUILDING YOUR WALL.

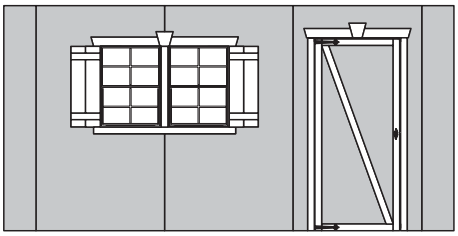

OPTION 2:
DOOR LOCATION
RIGHT SIDE OF FRONT WALL

IF YOU CHOOSE TO LOCATE THE *DOOR TOWARD THE RIGHT*
GO TO Page 27 TO BEGIN BUILDING YOUR WALL.

FRONT WALL WITH DOOR LEFT

PARTS REQUIRED:

x4 **AO**
2 x 4 x 22-1/2" (5,1 x 10,2 x 57,1 cm)

x4 **TK**
2 x 4 x 80" (5,1 x 10,2 x 203,2 cm)

x16 3" (7,6 cm)

You will build two window frame assemblies (Fig.A).

HINT:
For easier nailing stand on frame.

BEGIN

1 Orient parts on edge on floor. Measure and mark.

Use two 3" nails at each mark.

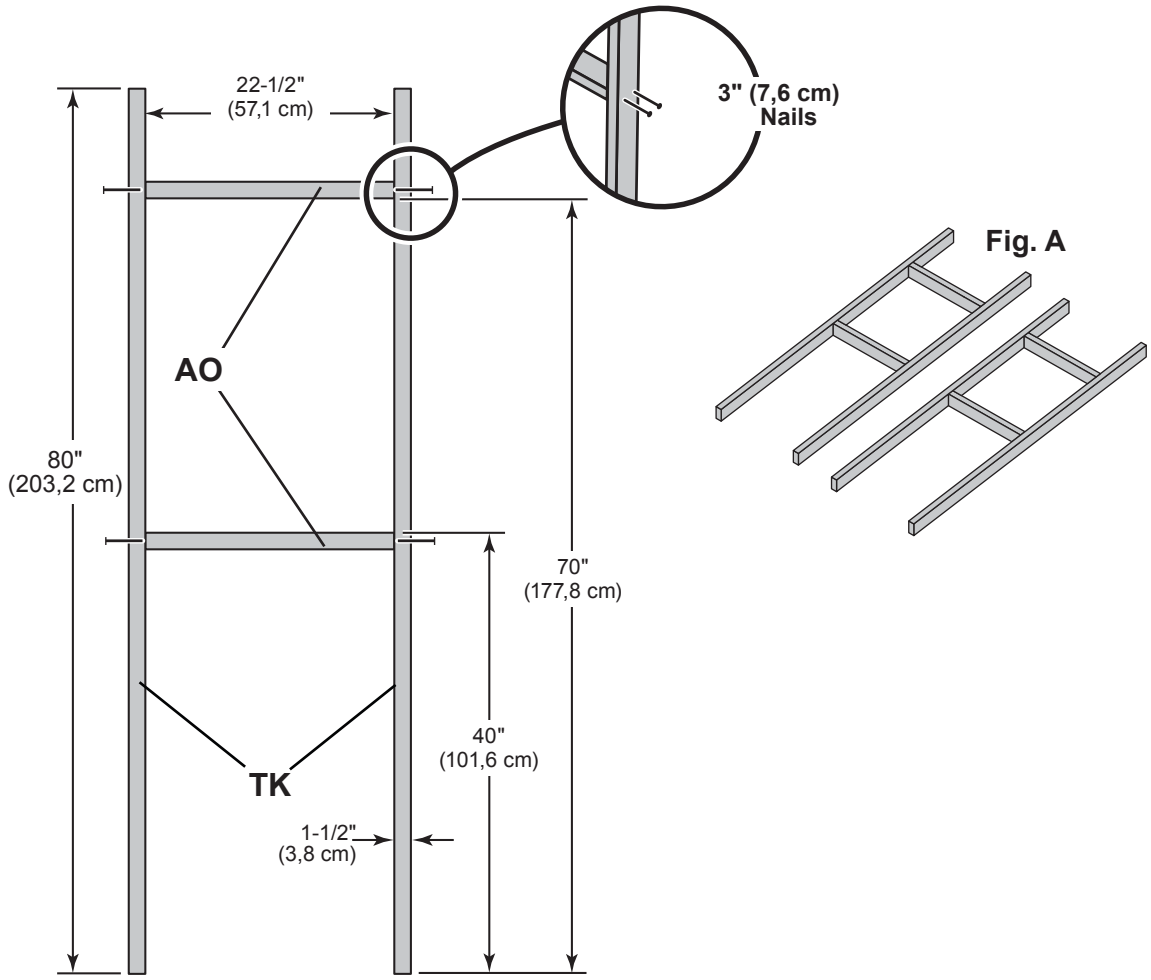

2 Repeat **Step 1** to build second window frame.

FINISH

You have finished your window frame assemblies.

FRONT WALL WITH DOOR LEFT

PARTS REQUIRED:

x1 **QT**
2 x 4 x 35" (5,1 x 10,2 x 88,9 cm)

x2 **ABA**
2 x 4 x 20" (5,1 x 10,2 x 50,8 cm)

x42
3" (7,6 cm)

x1 **TM**
2 x 4 x 72" (5,1 x 10,2 x 182,9 cm)

x2 **CPA**
2 x 4 x 8-1/2" (5,1 x 10,2 x 21,6 cm)

x7 **TK**
2 x 4 x 80" (5,1 x 10,2 x 203,2 cm)

x2 **TP**
2 x 4 x 96" (5,1 x 10,2 x 243,8 cm)

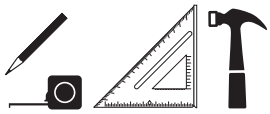

✓**BEGIN**

1 Orient parts on edge on floor. Measure and mark.
Use two 3" nails at each mark and four 3" nails at seams.

HINT:
For easier nailing stand on frame.

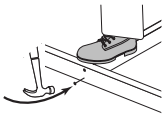

168" (426,7 cm)
156" (396,2 cm)
144" (365,8 cm)
96" (243,8 cm)
72" (182,9 cm)
72" (182,9) cm)
54-1/4" (137,8 cm)
48" (121,9 cm)
24" (61 cm)
17-3/4" (45,1 cm)
TP
TM
CPA
QT
1-1/2" (3,8 cm)
3" (7,6 cm) Nails
Two 3" Nails at each location.
80" (203,2 cm)
TK x7
35" (88,9 cm)
3" (7,6 cm) Nails
ABA
TOENAILING
TP
1-1/2" (3,8 cm)
1-1/2" (3,8 cm)
20" (50,8 cm)
96" (243,8 cm)
ABA

FRONT WALL WITH DOOR LEFT

PARTS REQUIRED:

x2 **CPA**
2 x 4 x 8-1/2" (5,1 x 10,2 x 21,6 cm)

x1 **QT**
2 x 4 x 35" (5,1 x 10,2 x 88,9 cm)

x2 **YFA**
2 x 4 x 68-1/2" (5,1 x 10,2 x 174 cm)

x2 **TK**
2 x 4 x 80" (5,1 x 10,2 x 203,2 cm)

x60 3" (7,6 cm)

x2 **Window Frame Assembly**

2 Place ***Sub-Assembly*** in frame as shown. Measure and mark.
Use two 3" nails at each mark and four 3" nails at seam.

HINT: For easier nailing stand on frame.

3 Orient door frame parts on edge on floor as shown. Measure and mark.
⚠ ***Install QT first.*** Use two 3" nails at each mark as shown.

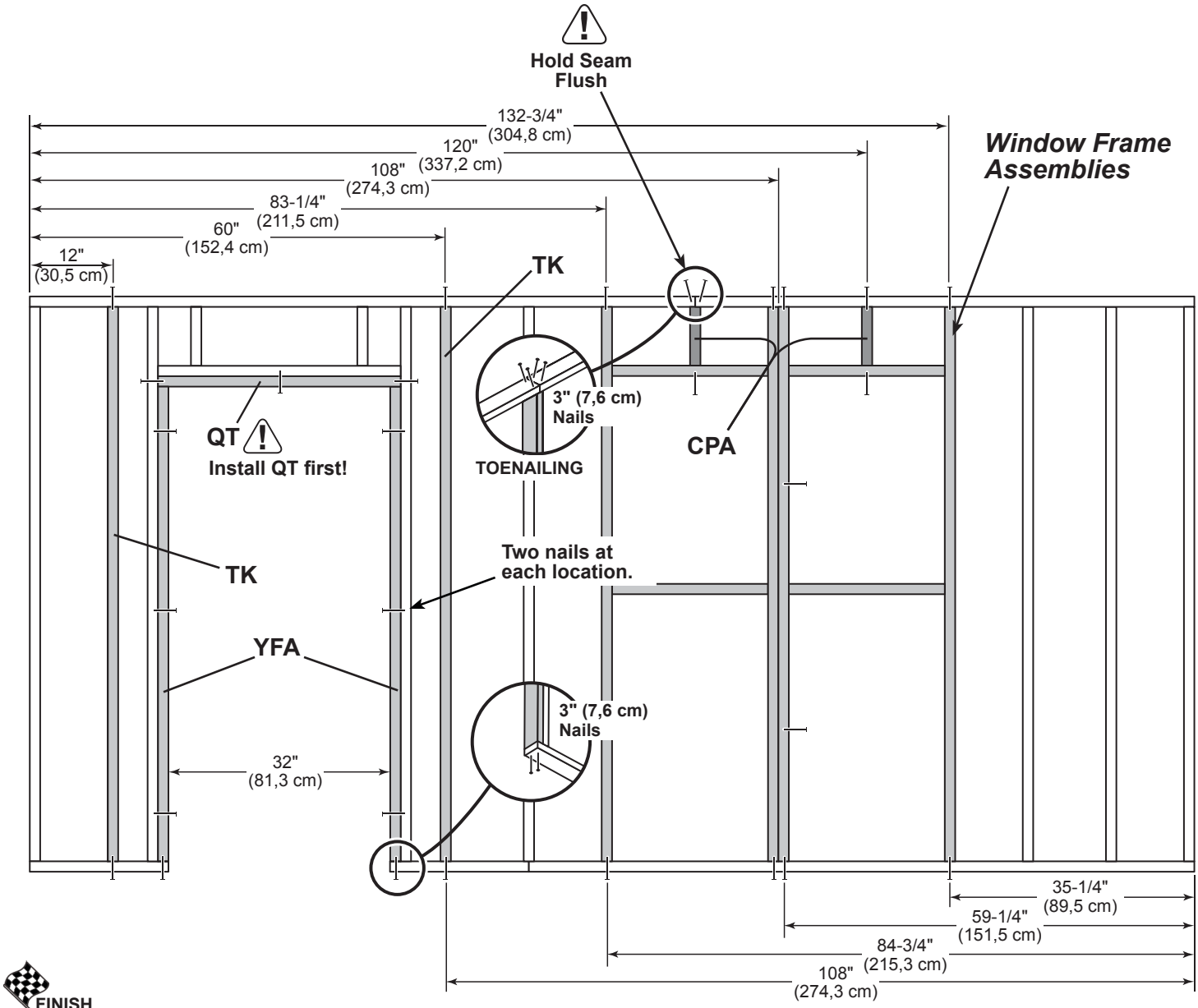

FINISH

You have finished your front wall frame.

FRONT WALL WITH DOOR LEFT

PARTS REQUIRED:

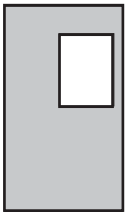

x1 3/8 x 48 x 84"
(1 x 121,9 x 213,4 cm)

3/4" GAUGE BLOCK

x63

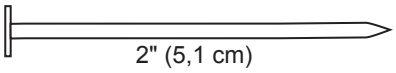

2" (5,1 cm)

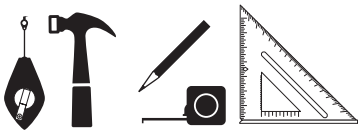

✓BEGIN

1 Place **48" x 84"** window panel onto wall frame flush to top of frame with primed side up as shown.
Use the gauge block to mark the 3/4" measurement on the wall stud.
Secure panel with 2" nails 6" apart on edges and 12" apart inside panel.

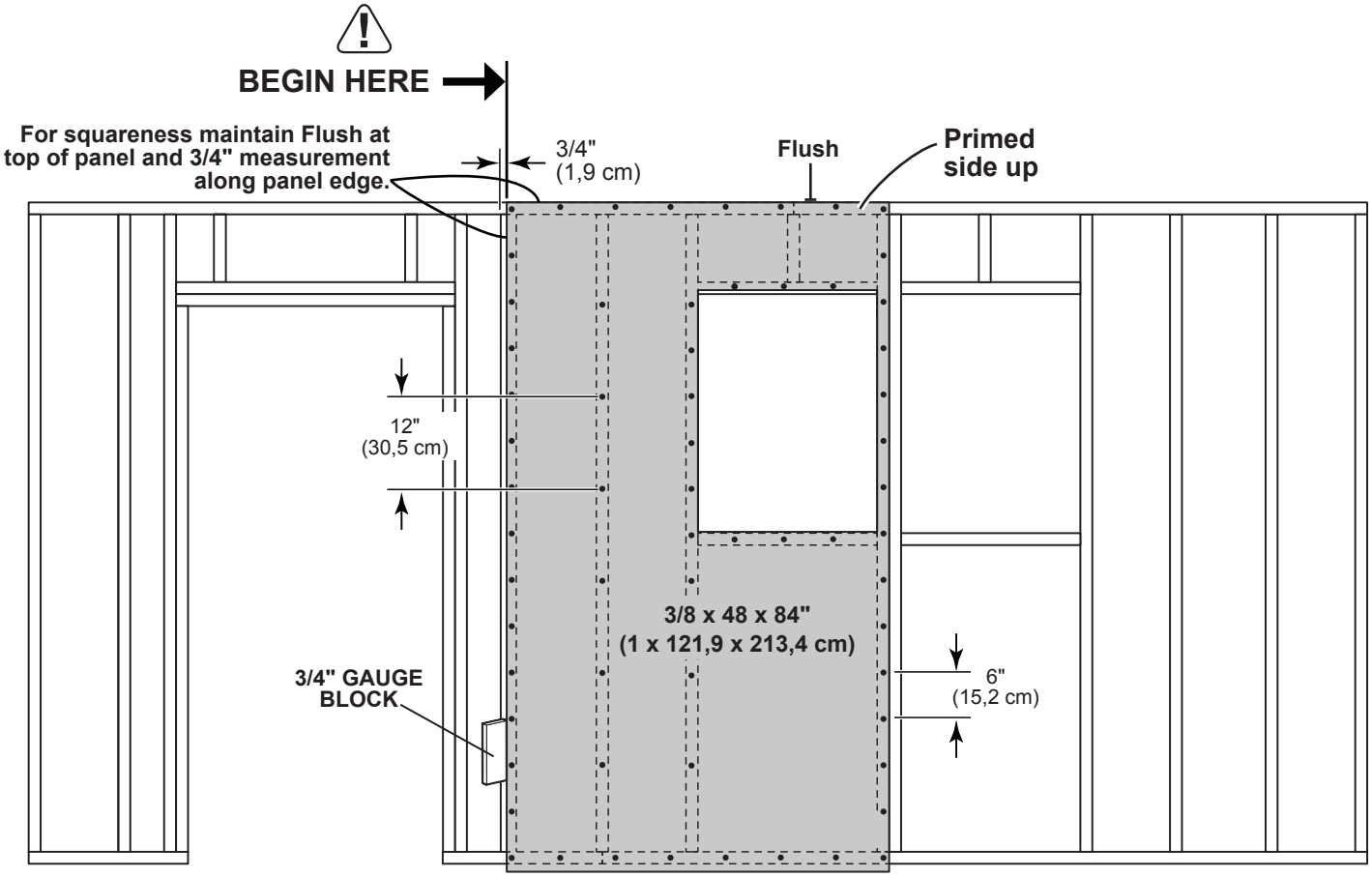

FRONT WALL WITH DOOR LEFT

PARTS REQUIRED:

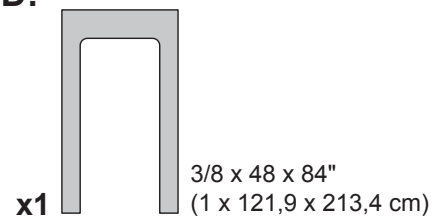

3/4" GAUGE BLOCK

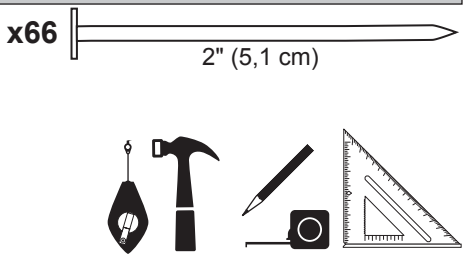

2 Place **48 x 84"** single door panel onto wall frame flush to top of frame with primed side up as shown.
Use the gauge block to mark the 3/4" measurement on the wall stud.
Secure panel with 2" nails 6" apart on edges

For squareness maintain flush and 3/4" measurement along panel edge.

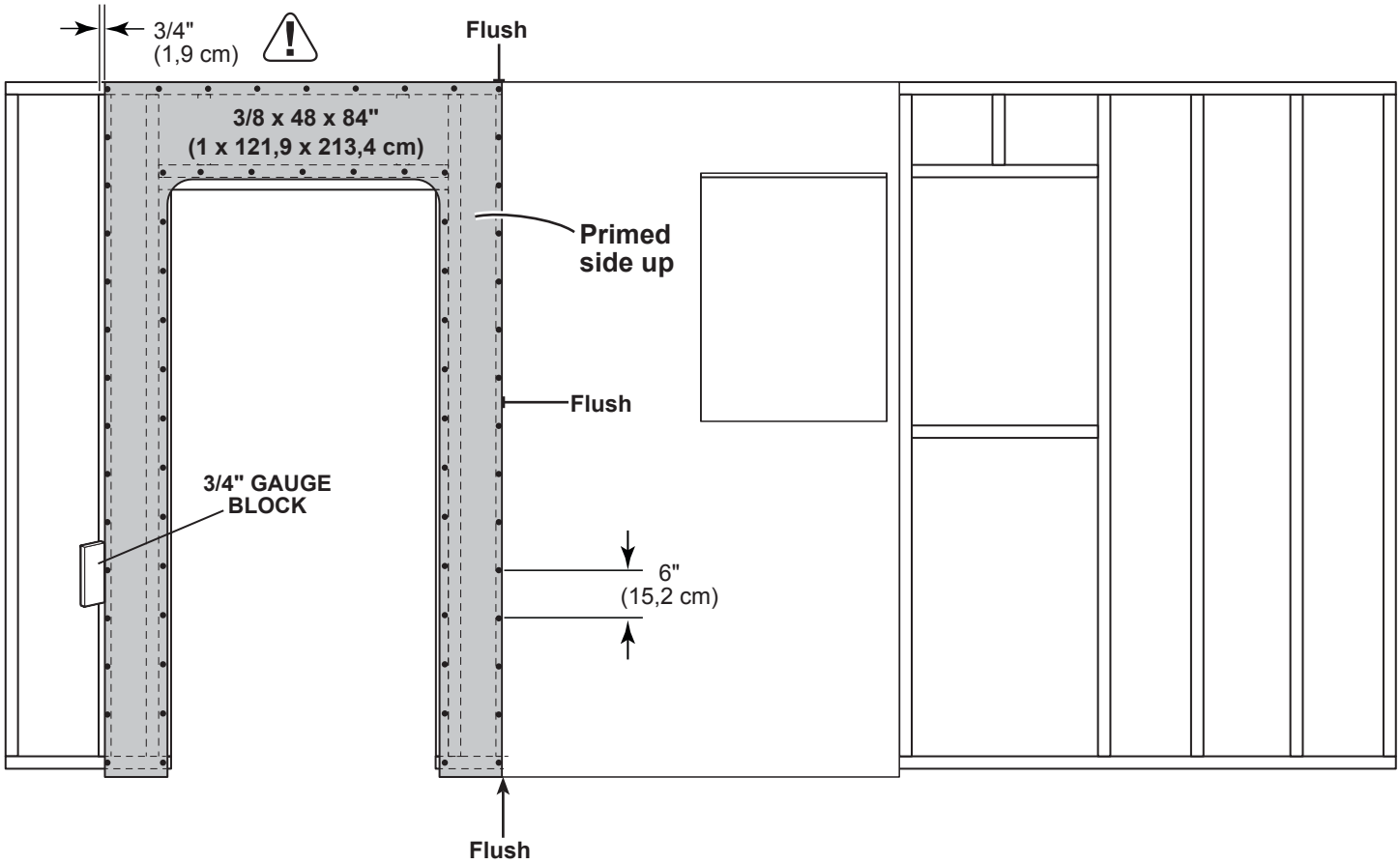

FRONT WALL WITH DOOR LEFT

PARTS REQUIRED:

x2 3/8 x 11-7/8 x 84"
(1 x 30,2 x 213,4 cm)

x1 **ATA Temporary Support**
2 x 4 x 64-1/8" (5,1 x 10,2 x 162,9 cm)

x1 3/8 x 48 x 84"
(1 x 121,9 x 213,4 cm)

x2 3" (7,6 cm)

x127 2" (5,1 cm)

3 Place 2nd **48" x 84"** window panel primed side up onto wall frame, flush to top of frame and flush to installed panel. Use the gauge block to mark the 3/4" measurement on the wall stud. Secure panel with 2" nails 6" apart on edges and 12" apart inside panel.

4 Place **11-7/8" x 84" end panels** primed side up onto wall frame, flush to top of frame and flush to installed panels.
Secure panel with 2" nails 6" apart on edges and 12" apart inside panel.

5 Attach **ATA** temporary support using 3" screws into wall frame as shown.
Hold the 32" (81,3 cm) dimension.

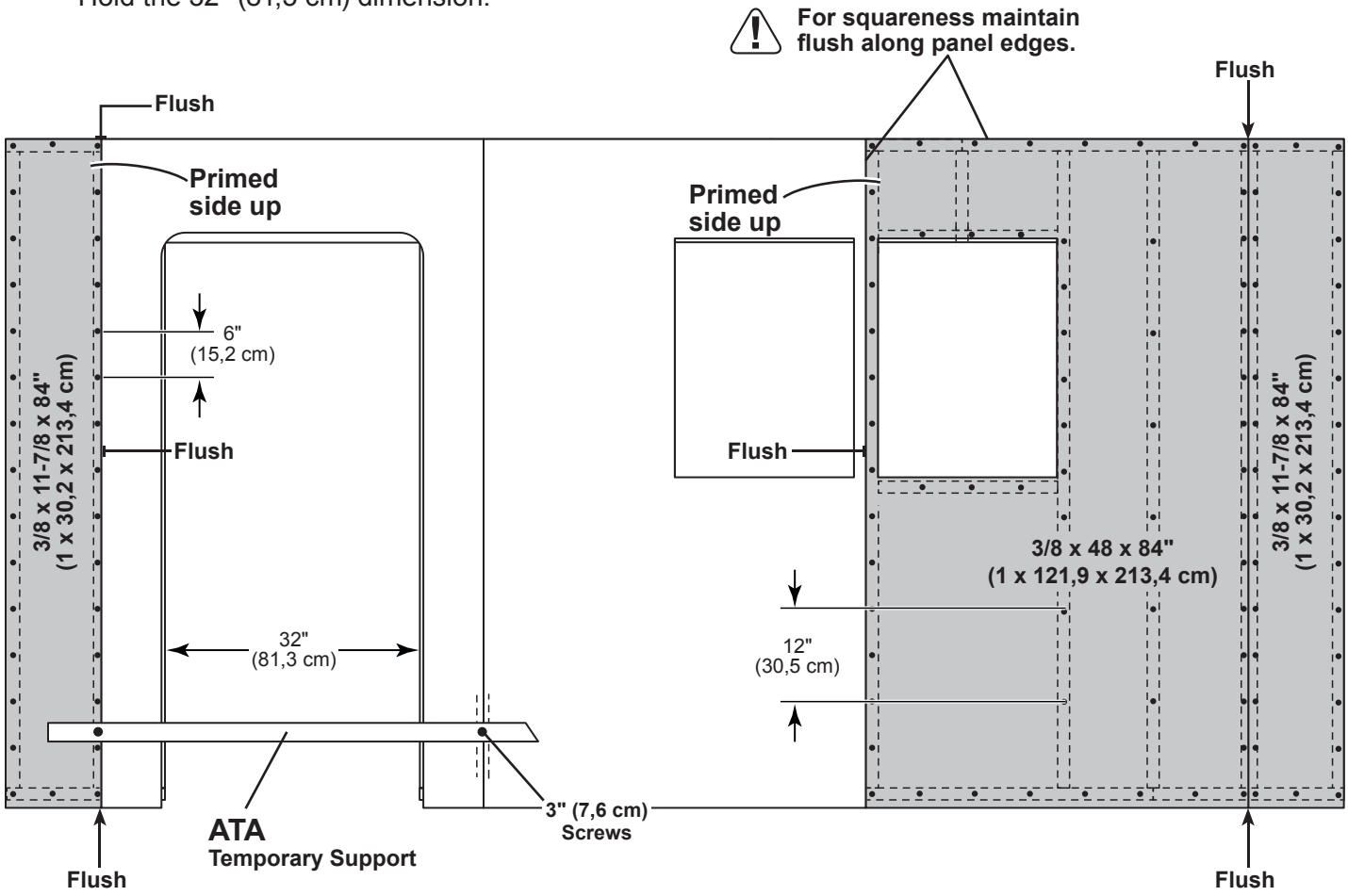

6 Carefully flip the front wall over.

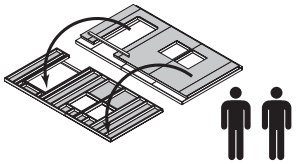

FINISH

You have finished building your front wall.

Go to page 33.

FRONT WALL WITH DOOR RIGHT

PARTS REQUIRED:

x4 AO
2 x 4 x 22-1/2" (5,1 x 10,2 x 57,1 cm)

x4 TK
2 x 4 x 80" (5,1 x 10,2 x 203,2 cm)

x16 3" (7,6 cm)

You will build two window frame assemblies (Fig.A).

HINT:
For easier nailing stand on frame.

BEGIN

1 Orient parts on edge on floor. Measure and mark.

Use two 3" nails at each mark.

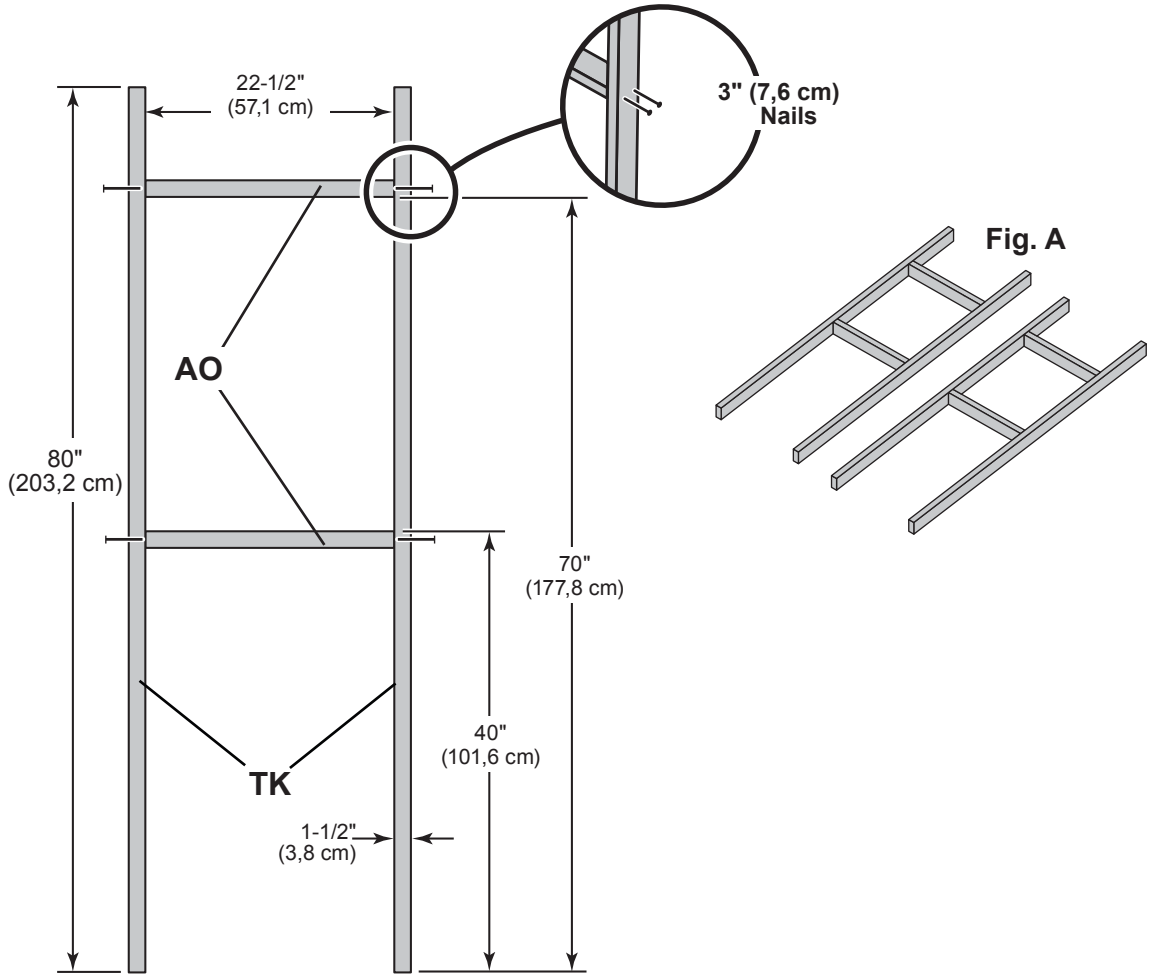

2 Repeat **Step 1** to build second window frame.

FINISH

You have finished your window frame assemblies.

FRONT WALL WITH DOOR RIGHT

PARTS REQUIRED:

x1 QT
2 x 4 x 35" (5,1 x 10,2 x 88,9 cm)

x2 ABA
2 x 4 x 20" (5,1 x 10,2 x 50,8 cm)

x42
3" (7,6 cm)

x1 TM
2 x 4 x 72" (5,1 x 10,2 x 182,9 cm)

x2 CPA
2 x 4 x 8-1/2" (5,1 x 10,2 x 21,6 cm)

x7 TK
2 x 4 x 80" (5,1 x 10,2 x 203,2 cm)

x2 TP
2 x 4 x 96" (5,1 x 10,2 x 243,8 cm)

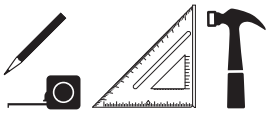

✓BEGIN

1 Orient parts on edge on floor. Measure and mark.
Use two 3" nails at each mark and four 3" nails at seams.

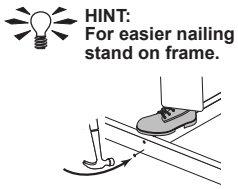

168" (426,7 cm)
156" (396,2 cm)
144" (365,8 cm)
72" (182,9) cm)
96" (243,8 cm)
72" (182,9 cm)
54-1/4" (137,8 cm)
48" (121,9 cm)
24" (61 cm)
17-3/4" (45,1 cm)
TM
TP
1-1/2" (3,8 cm)
3" (7,6 cm) Nails
Two 3" Nails at each location.
CPA
QT
80" (203,2 cm)
TK x7
3" (7,6 cm) Nails
35" (88,9 cm)
TP
TOENAILING
ABA
1-1/2" (3,8 cm)
1-1/2" (3,8 cm)
96" (243,8 cm)
20" (50,8 cm)
ABA

FRONT WALL WITH DOOR RIGHT

PARTS REQUIRED:

x2 **CPA**
2 x 4 x 8-1/2" (5,1 x 10,2 x 21,6 cm)

x1 **QT**
2 x 4 x 35" (5,1 x 10,2 x 88,9 cm)

x2 **YFA**
2 x 4 x 68-1/2" (5,1 x 10,2 x 174 cm)

x2 **TK**
2 x 4 x 80" (5,1 x 10,2 x 203,2 cm)

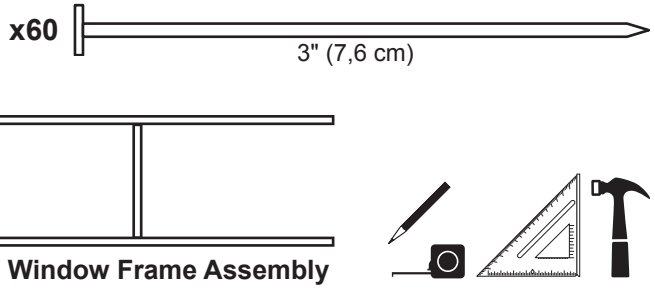

2 Place ***Sub-Assembly*** in frame as shown. Measure and mark. Use two 3" nails at each mark and four 3" nails at seam.

3 Orient parts on edge on floor as shown. Measure and mark.
⚠ ***Install QT first.*** Use two 3" nails at each mark as shown.

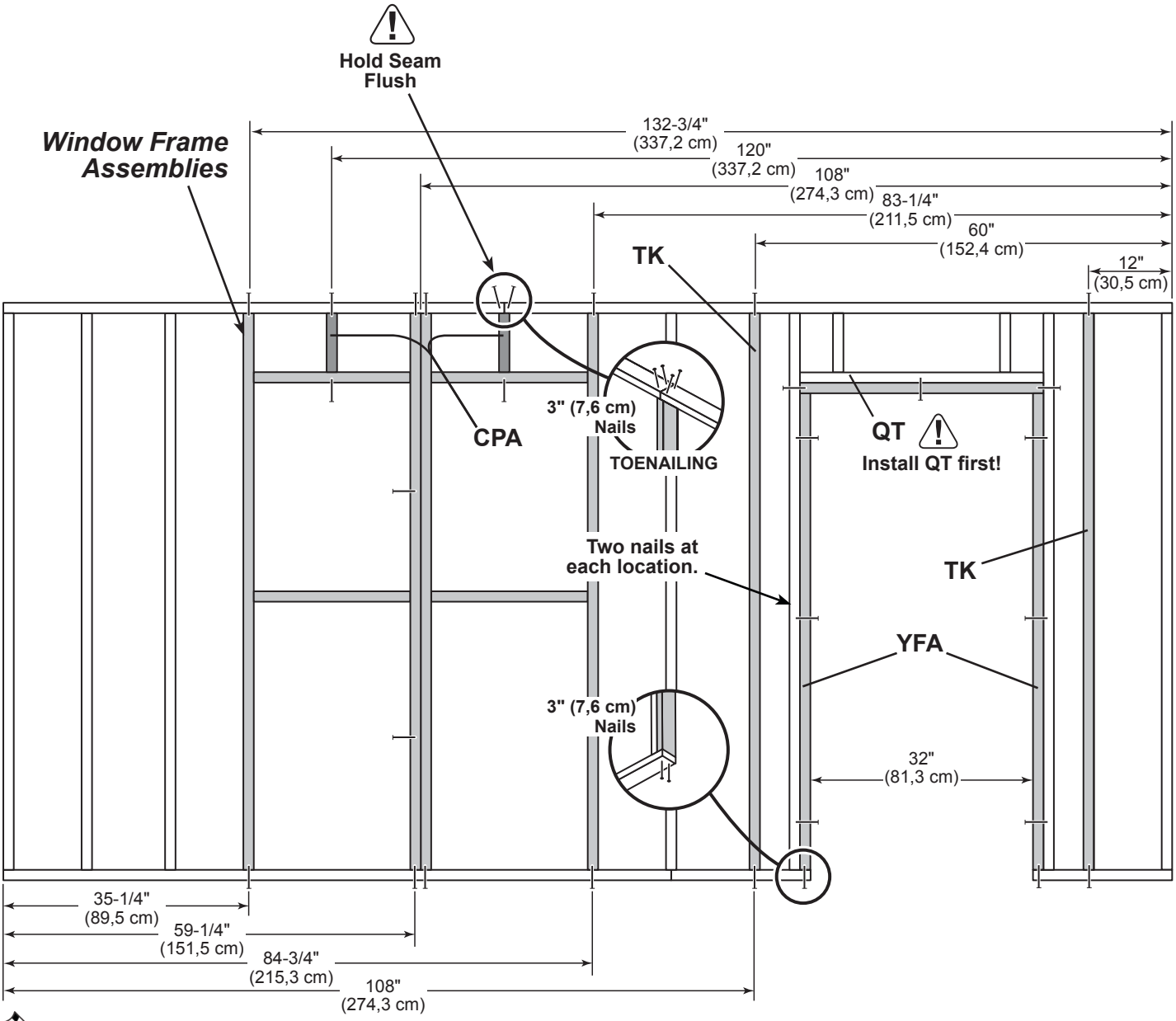

FINISH

You have finished your front wall frame.

FRONT WALL WITH DOOR RIGHT

PARTS REQUIRED:

✓BEGIN

1 Place **48" x 84"** window panel onto wall frame flush to top of frame with primed side up as shown.
Use the gauge block to mark the 3/4" measurement on the wall stud.
Secure panel with 2" nails 6" apart on edges and 12" apart inside panel.

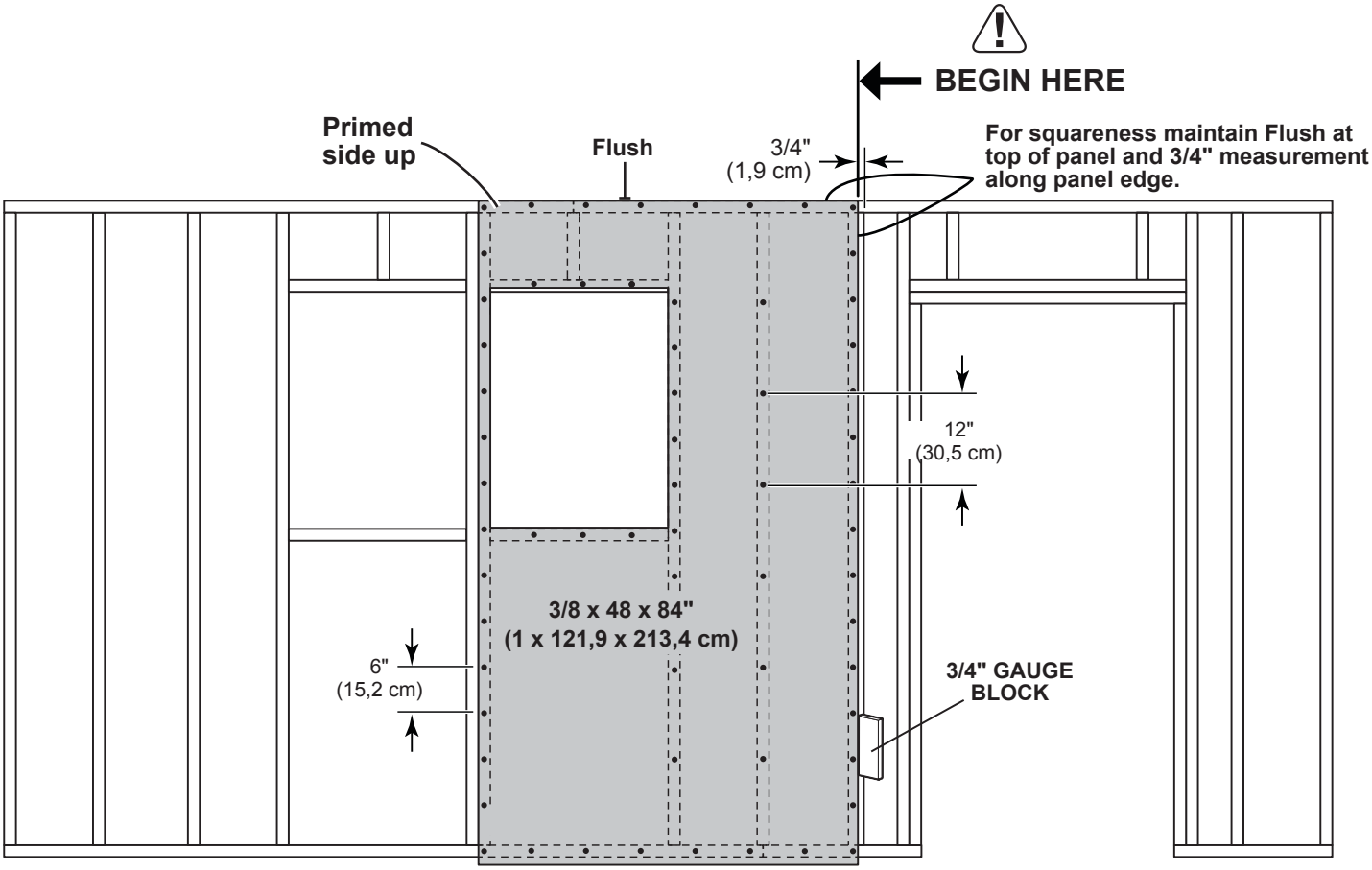

FRONT WALL WITH DOOR RIGHT

PARTS REQUIRED:

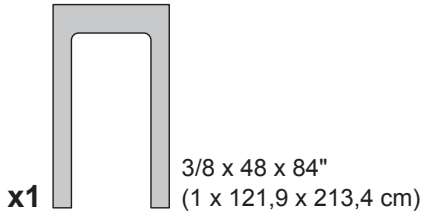

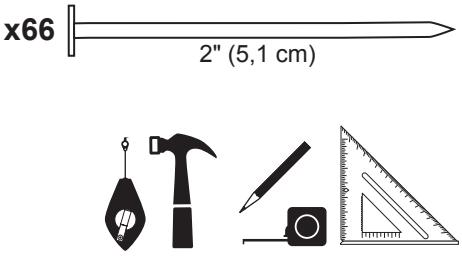

2 Place **48 x 84"** single door panel onto wall frame flush to top of frame with primed side up as shown.
Use the gauge block to mark the 3/4" measurement on the wall stud.
Secure panel with 2" nails 6" apart on edges

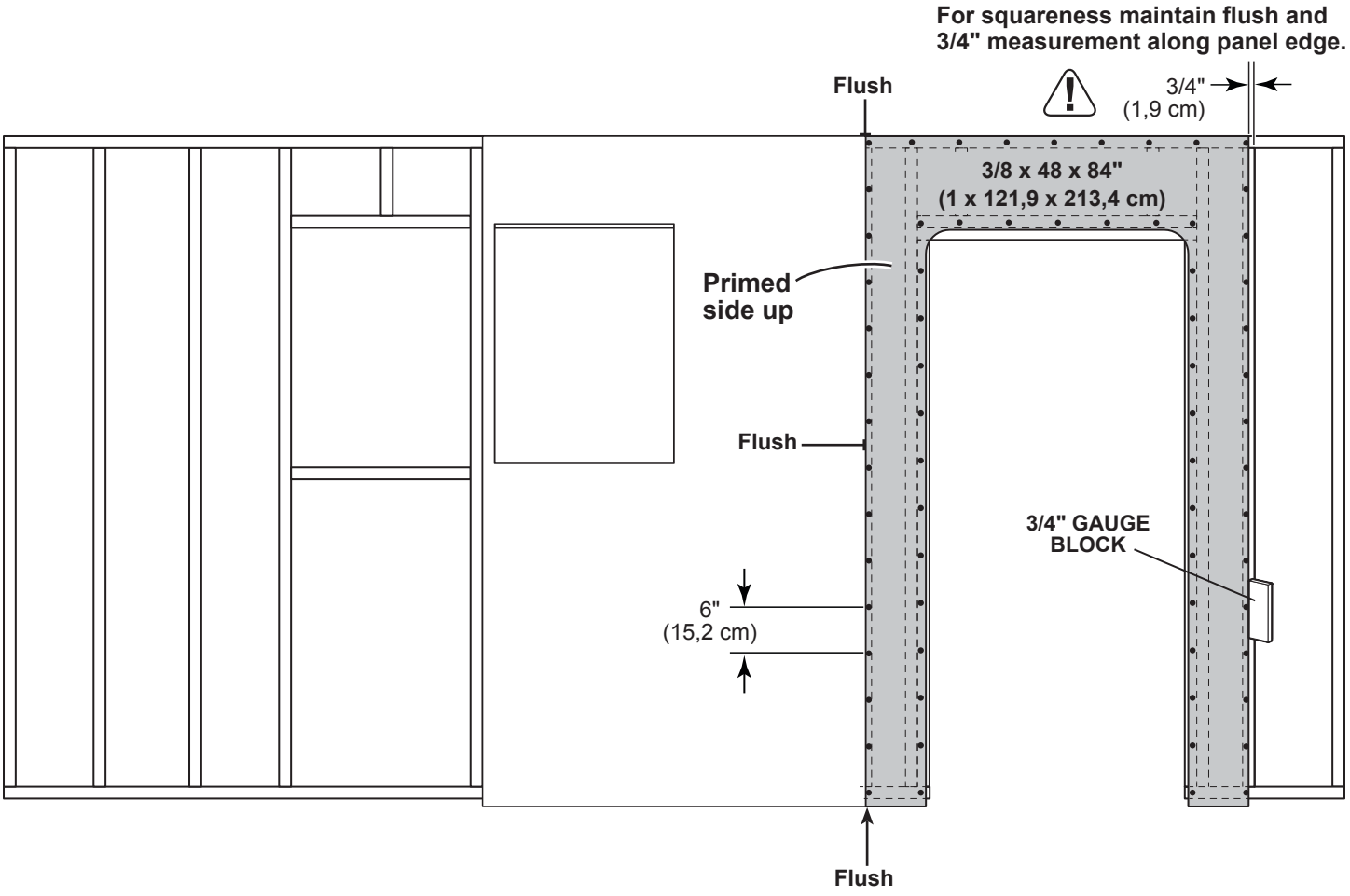

EAVE SIDE WALL WITH DOOR RIGHT

PARTS REQUIRED:

x2 3/8 x 11-7/8 x 84"
(1 x 30,2 x 213,4 cm)

x1 **ATA Temporary Support**
2 x 4 x 64-1/8" (5,1 x 10,2 x 162,9 cm)

x1 3/8 x 48 x 84"
(1 x 121,9 x 213,4 cm)

x127 2" (5,1 cm)

3 Place 2nd **48" x 84"** window panel primed side up onto wall frame, flush to top of frame and flush to installed panel.
Use the gauge block to mark the 3/4" measurement on the wall stud.
Secure panel with 2" nails 6" apart on edges and 12" apart inside panel.

4 Place **11-7/8" x 84" end panels** primed side up onto wall frame, flush to top of frame and flush to installed panels.
Secure panel with 2" nails 6" apart on edges and 12" apart inside panel.

5 Attach **ATA** temporary support using 3" screws into wall frame as shown.
Hold the 32" (81,3 cm) dimension.

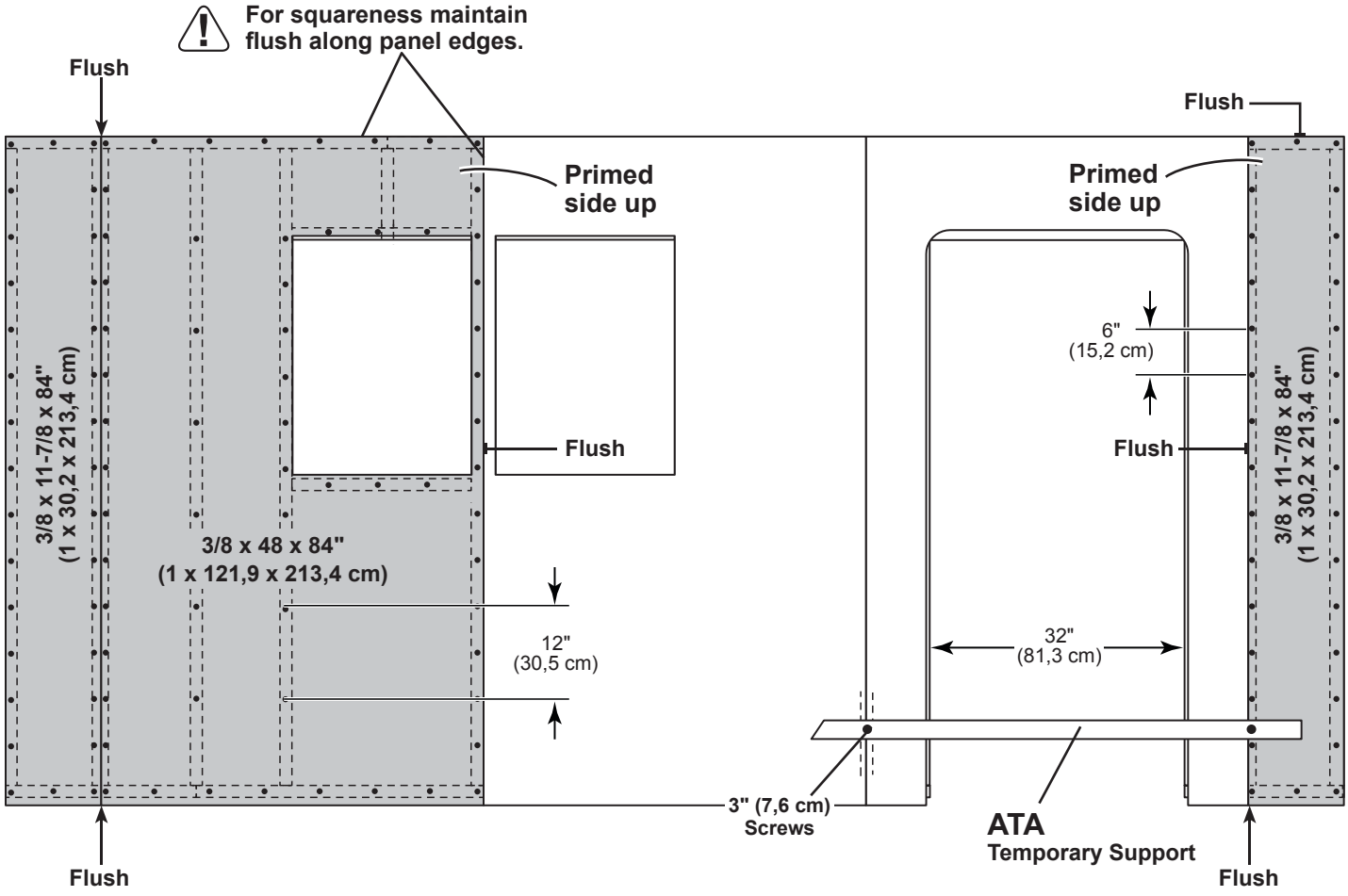

6 Carefully flip the front wall over.

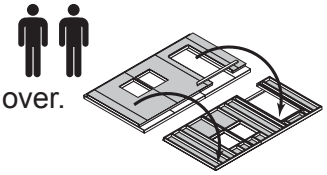

FINISH

You have finished building your front wall.

BACK WALL

PARTS REQUIRED:

x36 — 3" (7,6 cm)

x2	TM	2 x 4 x 72" (5,1 x 10,2 x 182,9 cm)
x8	TK	2 x 4 x 80" (5,1 x 10,2 x 203,2 cm)
x2	TP	2 x 4 x 96" (5,1 x 10,2 x 243,8 cm)

✓BEGIN

1 Orient parts on edge on floor. Measure and mark.

Use two 3" nails at each mark and four 3" nails at seams

HINT: For easier nailing stand on frame.

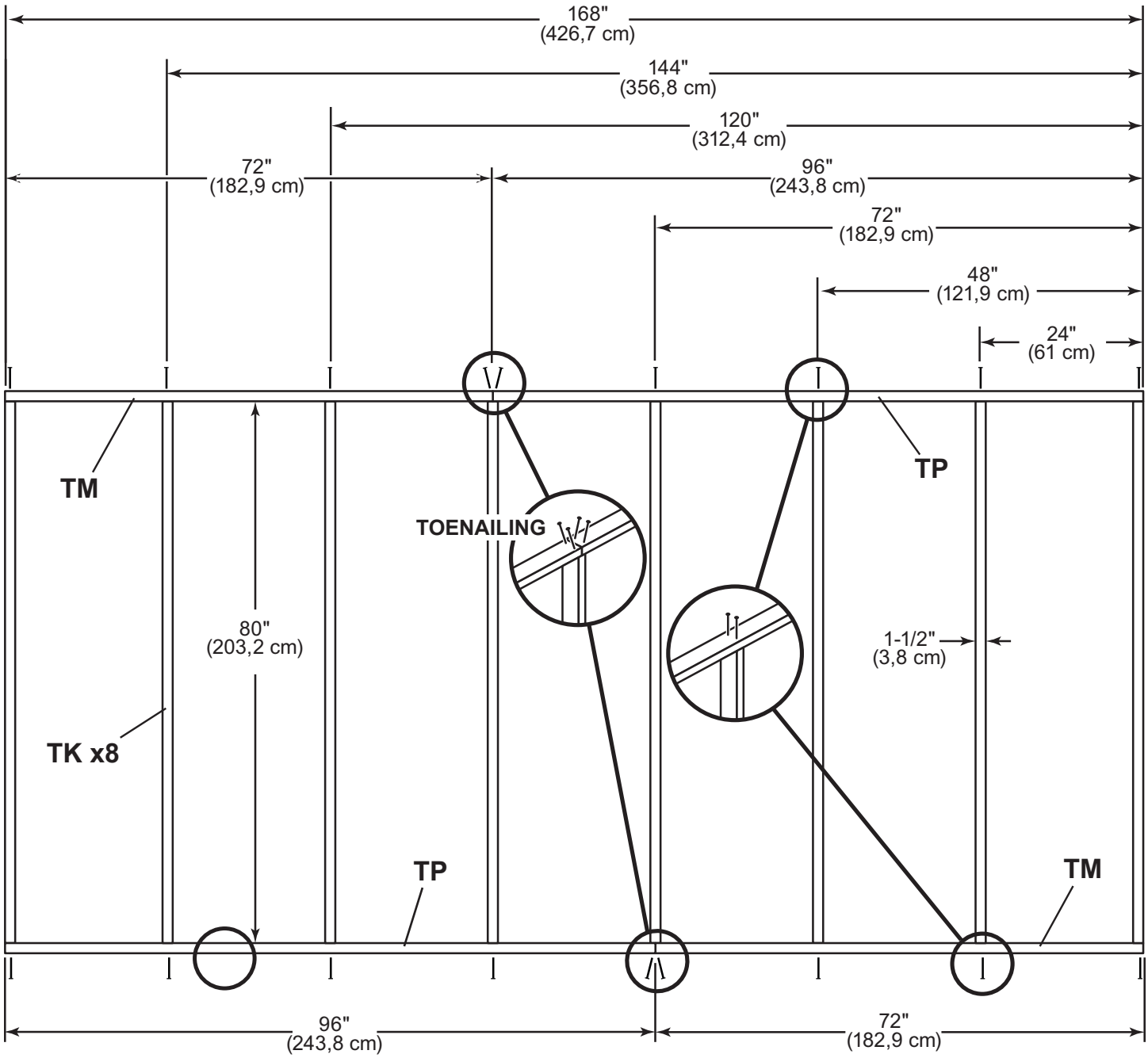

BACK WALL

PARTS REQUIRED:

x50 2" (5,1 cm)

x1 48 x 84" (121,9 x 213,4 cm)

GAA

3/4" GAUGE BLOCK

Ensure your wall frame is square by installing one panel and squaring frame.

2 Place 1st **48 x 84"** panel onto wall frame flush to top of frame with primed side up as shown. Use the gauge block to mark the 3/4" measurement on the wall stud. Secure panel with two 2" nails in the corners **(Fig. A)**.

3 Move to the opposite end. Using the long edge of the panel as a lever move the panel side-to-side until you have a 3/4" measurement on the wall stud. Secure corner with two 2" nails **(Fig. B)**.

Nail the panel using 2" nails 6" apart on edges and 12" apart inside panel.

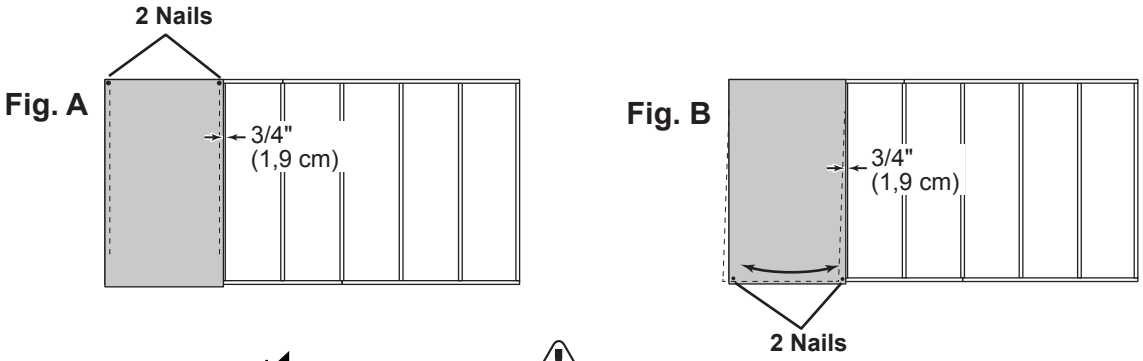

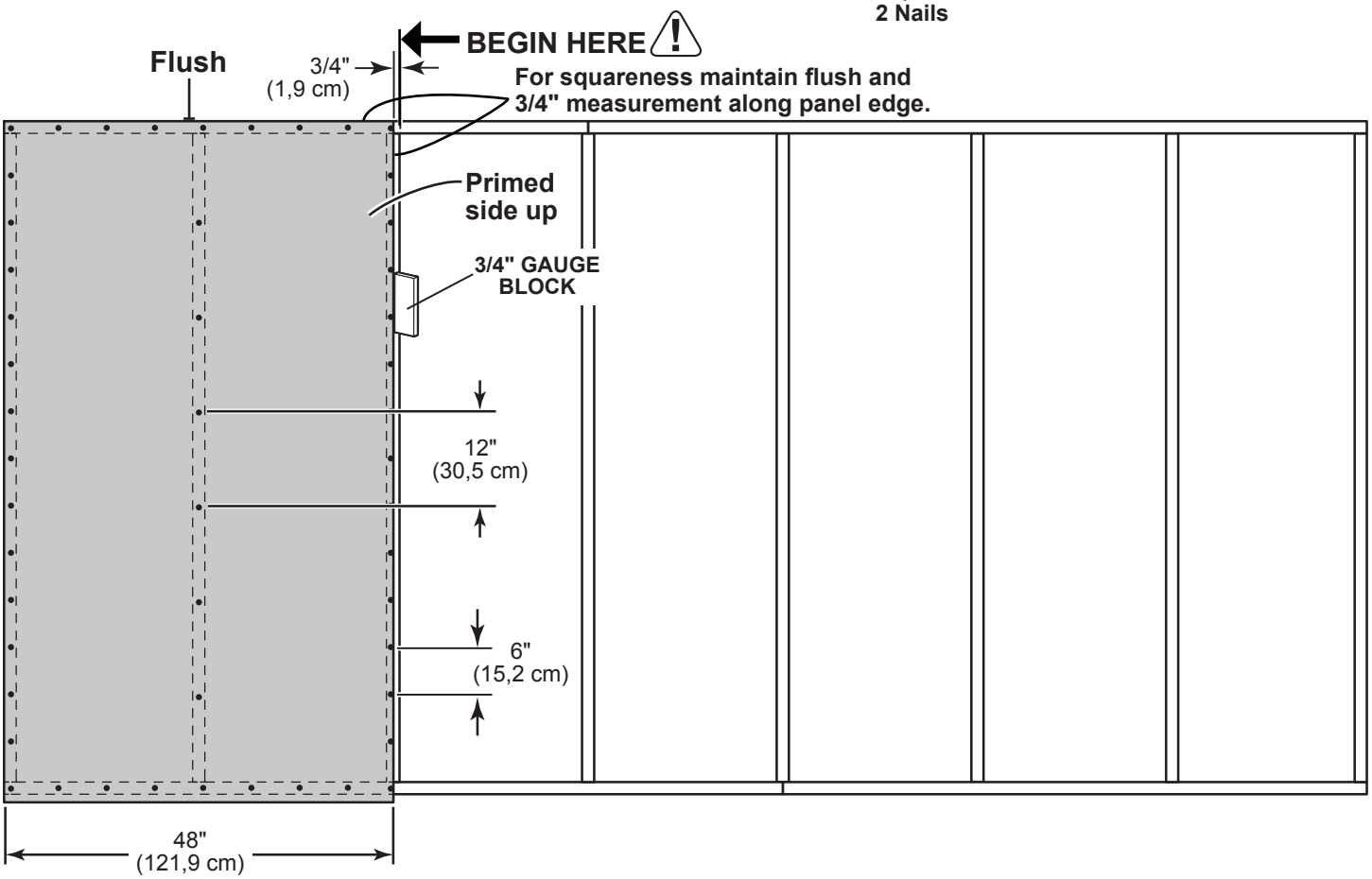

BACK WALL

PARTS REQUIRED:

x136 — 2" (5,1 cm)

x2 — 48 x 84" (121,9 x 213,4 cm)

x1 — 23-7/8 x 84" (60,6 x 213,4 cm)

GAA — 3/4" GAUGE BLOCK

4 Place 2nd **48" x 84"** panel on frame as shown with primed side facing up.

Nail using 2" nails 6" apart on edges and 12" apart inside panel.

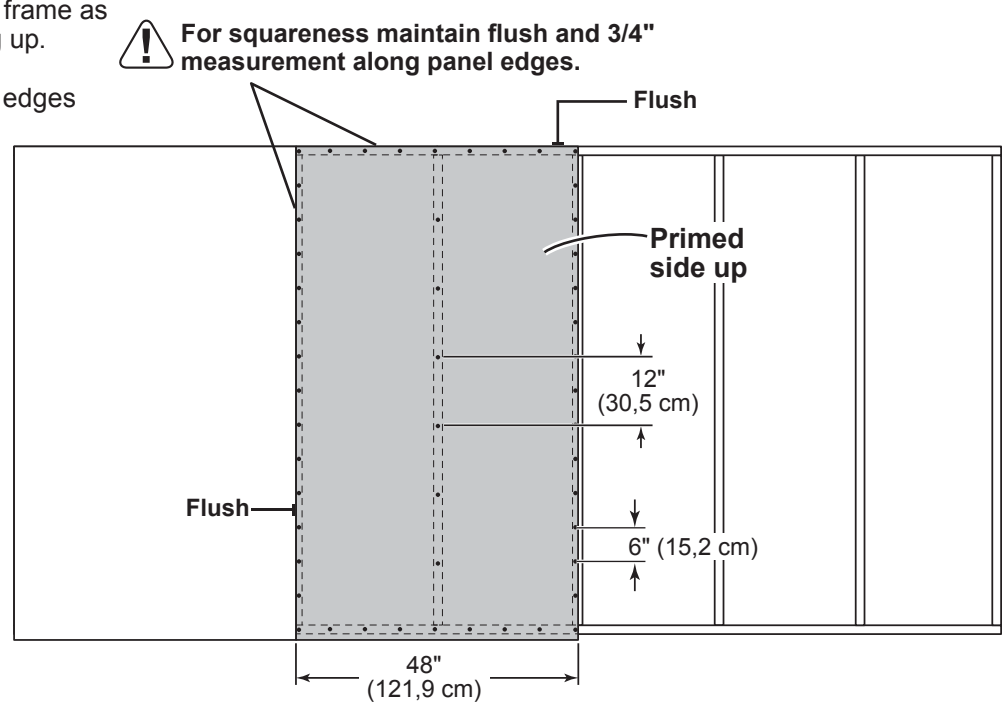

5 Place 3rd **48" x 84"** panel on frame as shown with primed side facing up.
Nail using 2" nails 6" apart on edges and 12" apart inside panel.

6 Place end **23-7/8" x 84"** panel on frame as shown with primed side facing up.
Nail using 2" nails 6" apart on edges.

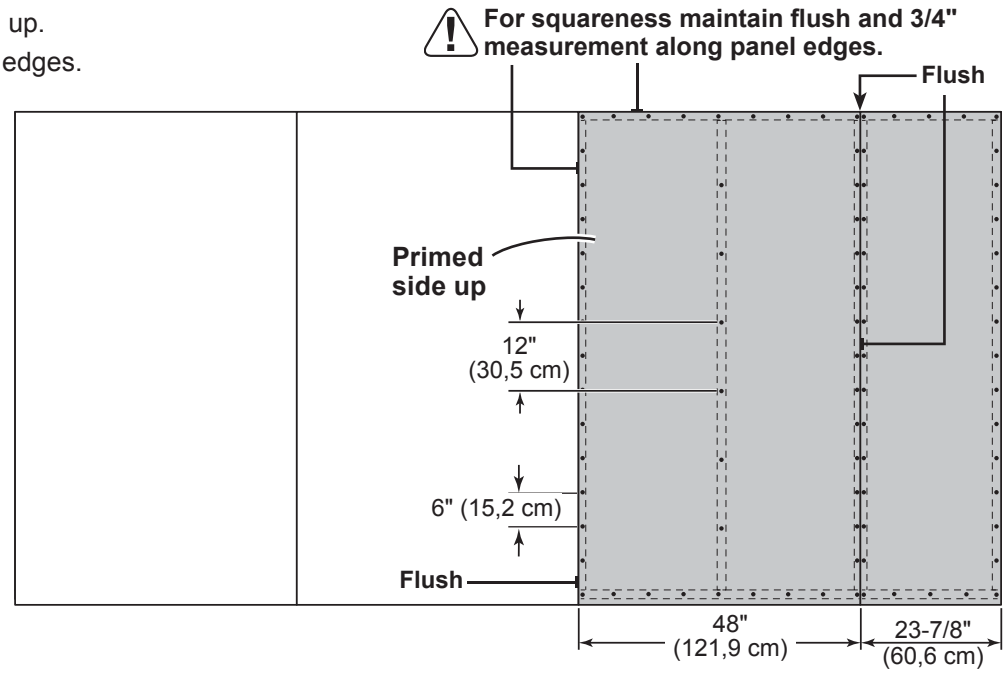

7 Carefully flip the back wall over.

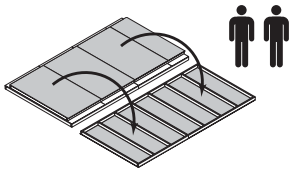

FINISH

You have finished building your back wall.

GABLE END WALL

PARTS REQUIRED:

x1 **TK**
2 x 4 x 80" (5 x 10,2 x 203,2 cm)

x2 **SZ**
2 x 4 x 89" (5 x 10,2 x 226,1 cm)

x2 **PVA** **Temporary support**
2 x 4 x 6"
(5,1 x 10,2 x 15,2 cm)

x2 **DHA** **Temporary support**
19/32 x 5-1/2 x 30-1/8"
(1,5 x 14 x 76,5 cm)

x4
3" (7,6 cm)

✓**BEGIN**

1 Orient parts on floor. **TK** is on flat side **(Fig.A)**.

Support center stud **TK** with temporary supports **DHA** and **PVA** as shown. Measure, mark and square.

Use two 3" nails at each connection.

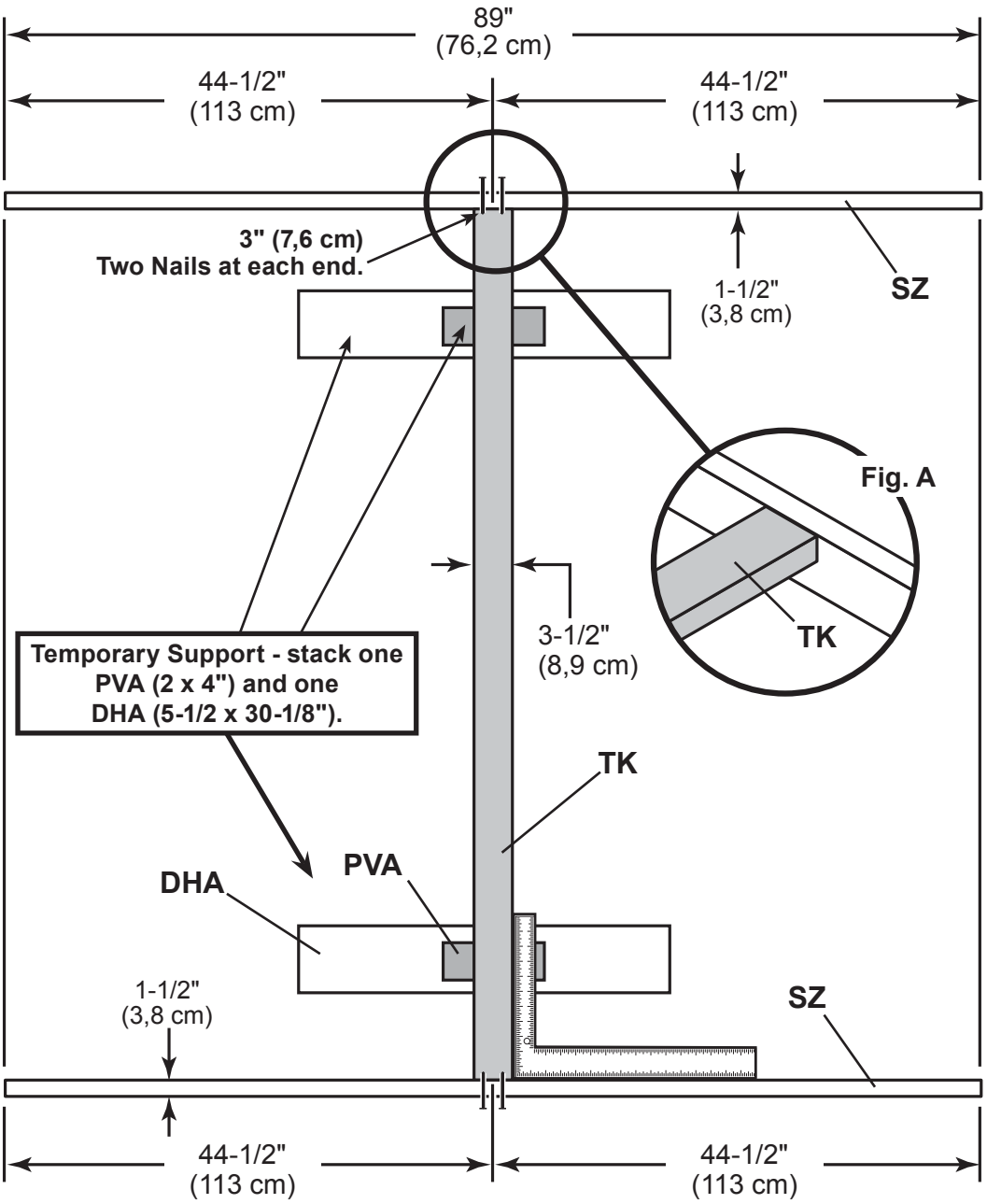

GABLE END WALL

PARTS REQUIRED:

x1

48 x 84"
(121,9 x 213,4 cm)

x13 1-1/2" (3,8 cm)

x16 2" (5,1 cm)

2 Place **48 x 84"** panel with primed side up onto frame flush at top and with a 1-3/4" gap along right side.
Maintain 1-3/4" measurement along edge.

Secure panel to top and bottom plate using 2" nails 6" (15,2 cm) apart along edges.

Secure panel to TK with 1-1/2" nails.

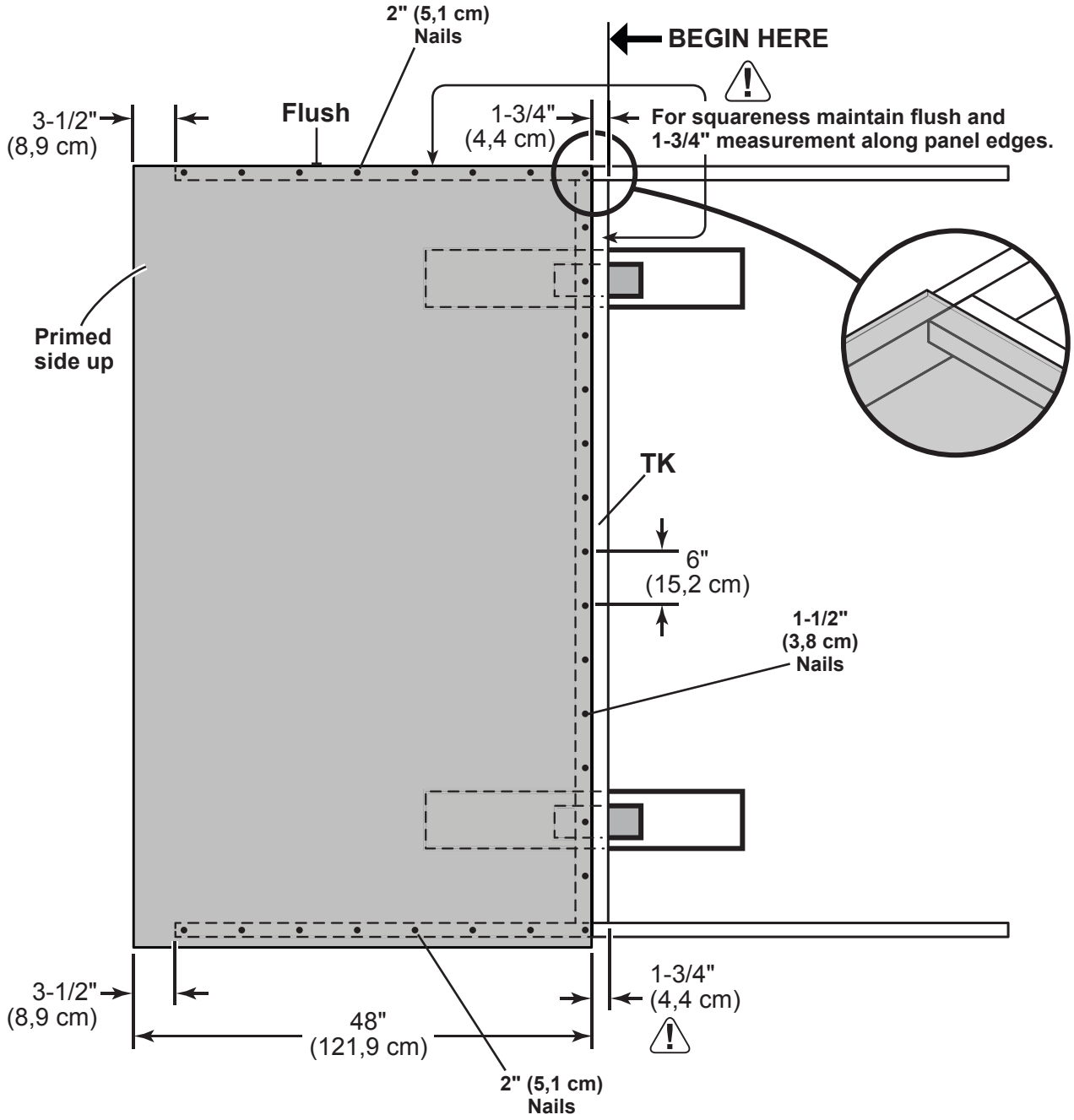

GABLE END WALL

PARTS REQUIRED:

x1 — 48 x 84" (121,9 x 213,4 cm)

x13 — 1-1/2" (3,8 cm)

x16 — 2" (5,1 cm)

3 Place right **48 x 84"** panel flush to left panel with primed side up.

Secure using 2" nails 6" apart on edges.

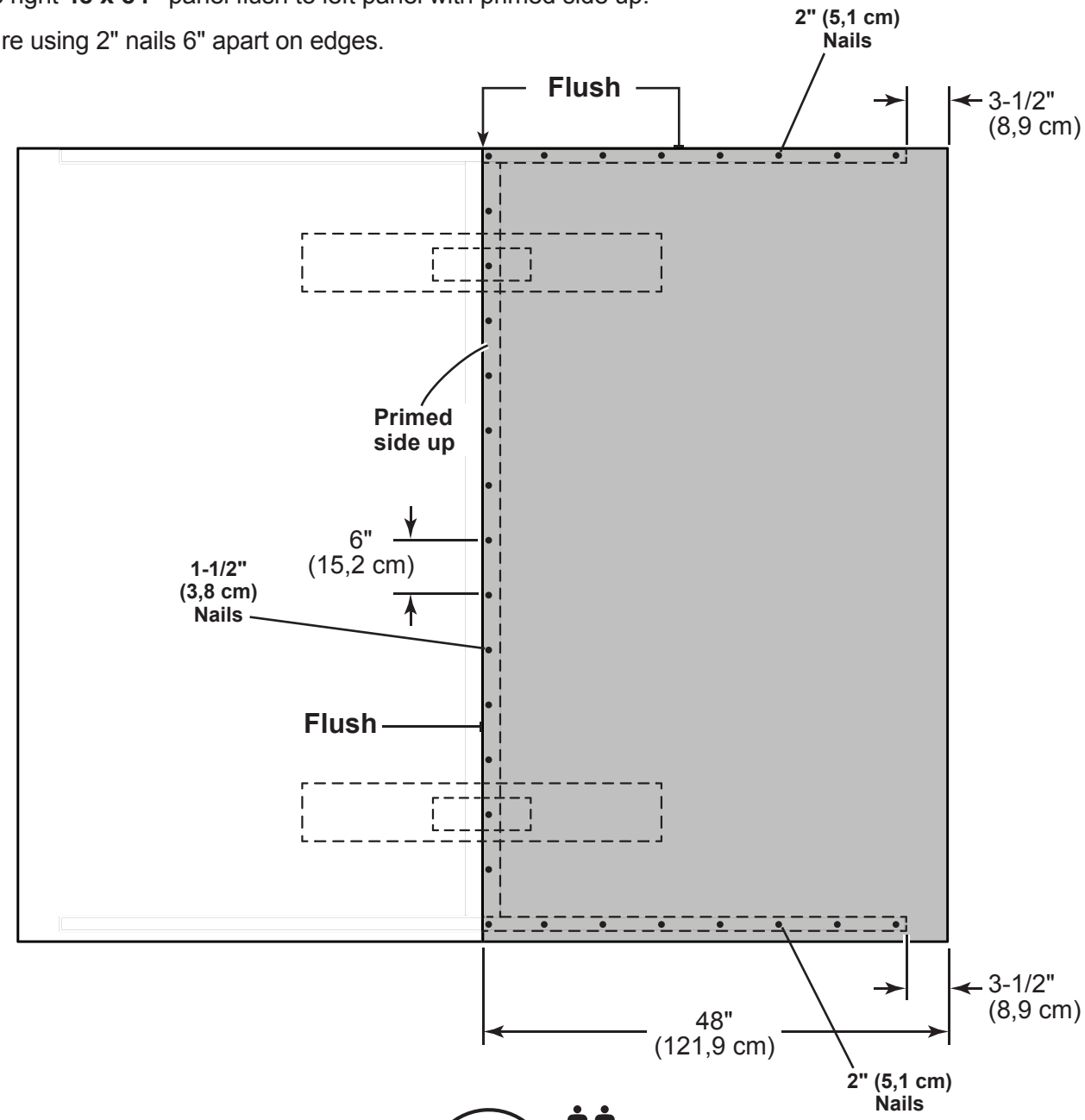

4 Carefully flip the gable wall over.

Remove temporary supports.

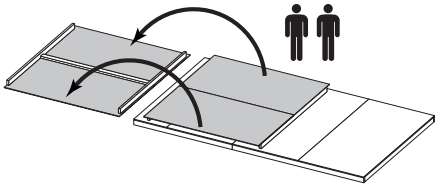

FINISH

You have finished building your gable end wall.

FRONT WALL

PARTS REQUIRED

x1 **OO** **Temporary Support**
1-1/4 x 2-1/2 x 69" (3,2 x 6,3 x 175,3 cm)

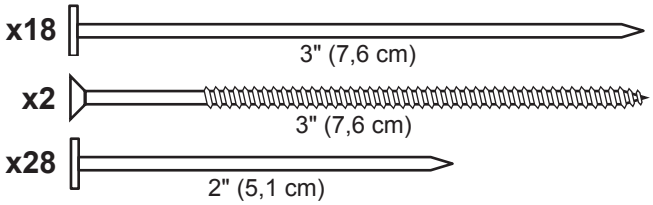

✓**BEGIN**
Stand front wall on floor.

1 Center wall on the 168" (426,7 cm) floor dimension.

Use **OO** as a temporary brace. Secure with two 3" screws.

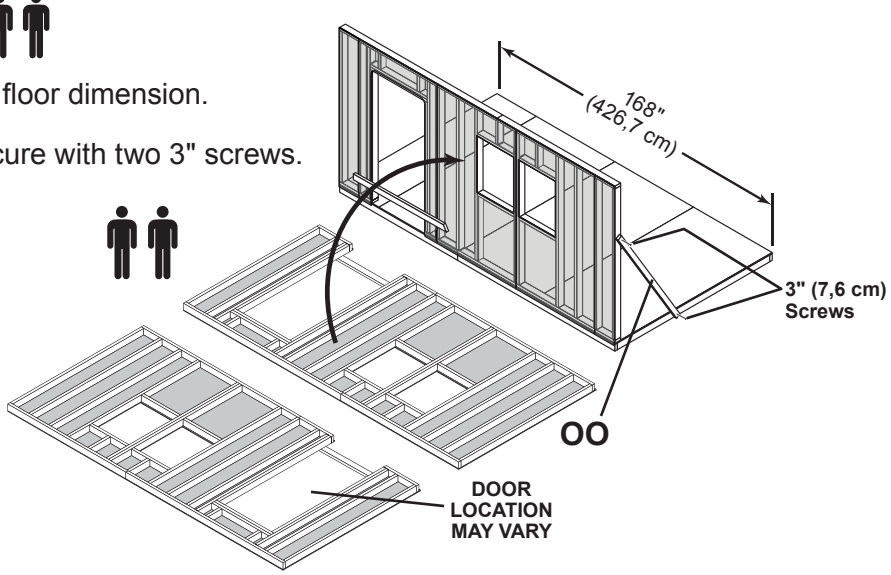

2 First, nail lower edge of panel to floor frame using 2" nails 6" apart.
Angle nail to hit floor frame **(Fig. A)**.

Secure wall bottom plates to floor using 3" nails **(Fig. A)**.

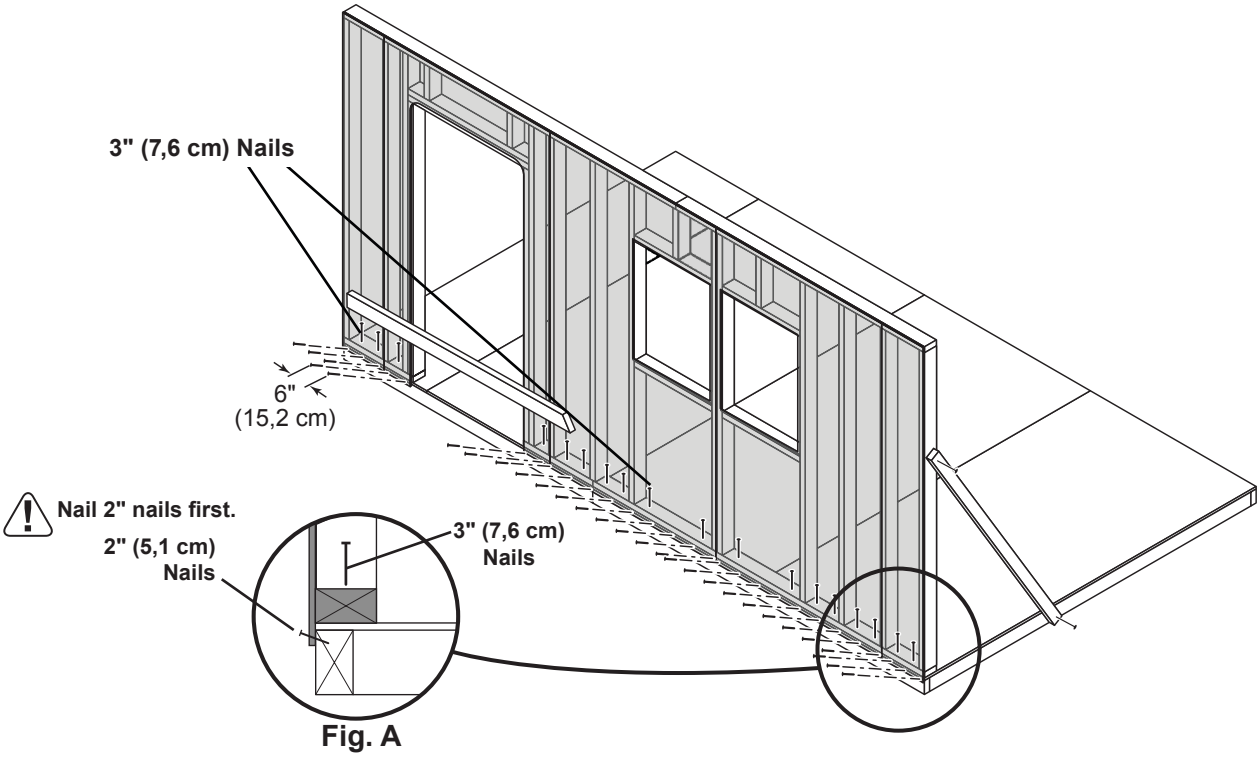

Fig. A

FINISH
You have finished standing your front wall.

GABLE END WALL

PARTS REQUIRED:

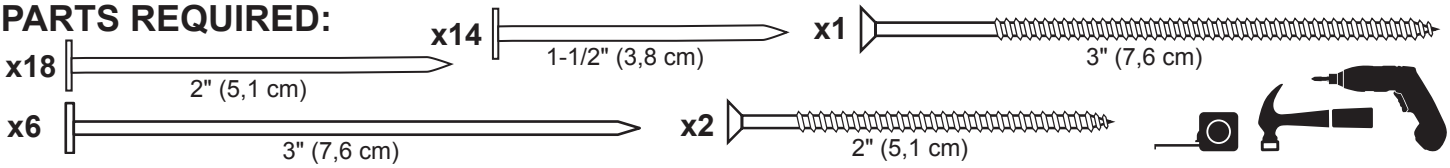

BEGIN
Stand wall on floor.

It is important to secure the gable end wall in the following order:

1 Set gable end wall on floor and secure top of wall using one 2" screw into top plate **(Fig A)**.

ENSURE TOP OF WALL FRAMES ARE FLUSH.

Move to the bottom of gable end wall and secure bottom of wall using one 2" screw into front wall bottom plate **(Fig A)**.

Nail lower edge of panels to floor using 2" nails 6" apart. Angle nail to hit floor frame **(Fig. B)**.

ENSURE GABLE AND FRONT WALL PANELS ARE FLUSH BEFORE SECURING.

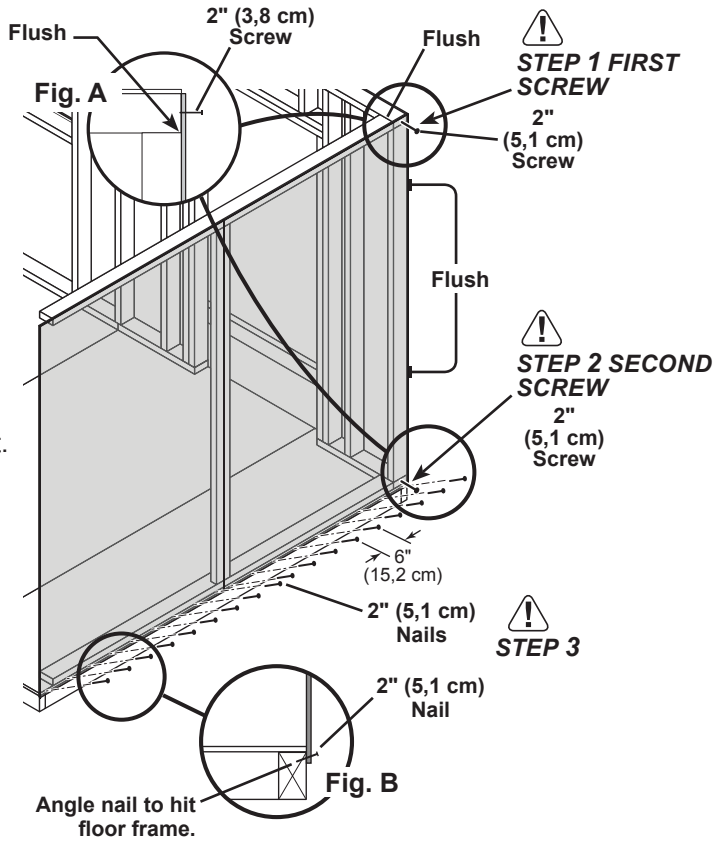

2 Nail gable end wall panel to front wall stud using 1-1/2" nails 6" apart **(Fig. C)**.

Secure gable end wall to floor using 3" nails **(Fig. C)**.

3 Secure gable wall top frame 2 x 4 using one 3" screw toe-screwed into front wall frame at an angle as shown **(Fig. D)**.

FINISH
You have finished standing your gable end wall.

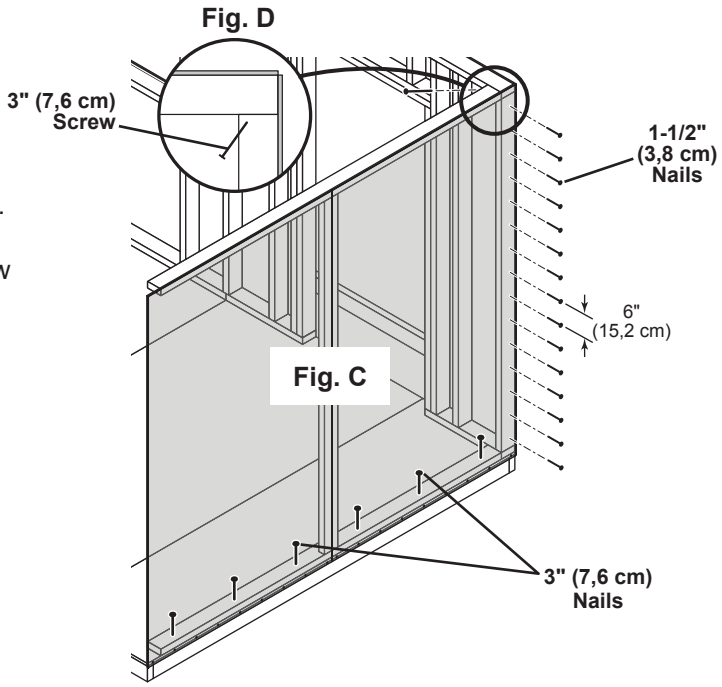

BACK WALL

PARTS REQUIRED: **x2** 2" (5,1 cm) **x1** 3" (7,6 cm) **x14** 1-1/2" (3,8 cm)

✓**BEGIN**
Stand back wall on floor.

1 Center back wall on the 168" (426,7 cm) floor dimension.

Secure top of wall using one 2" screw into top plate **(Fig A)**.

⚠ **BE SURE TOP OF WALL FRAMES ARE FLUSH.** ⚠

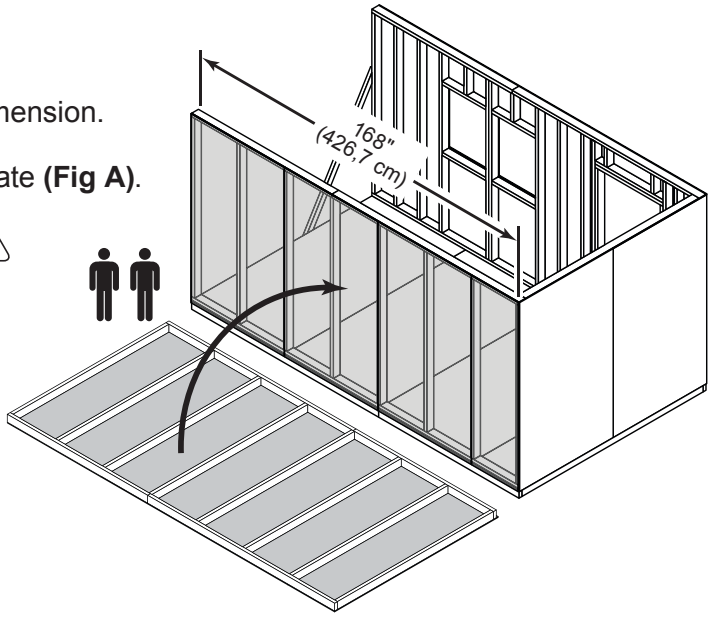

2 Move to the bottom of gable end wall and secure bottom of wall using one 2" screw into back wall bottom plate **(Fig A)**.

Nail gable wall panel to back wall stud using 1-1/2" nails 6" apart **(Fig. B)**.

⚠ **ENSURE GABLE AND BACK WALL PANELS ARE FLUSH BEFORE SECURING.**

Secure gable wall top frame 2 x 4 using one 3" screw toe-screwed into back wall frame at an angle as shown **(Fig. C)**.

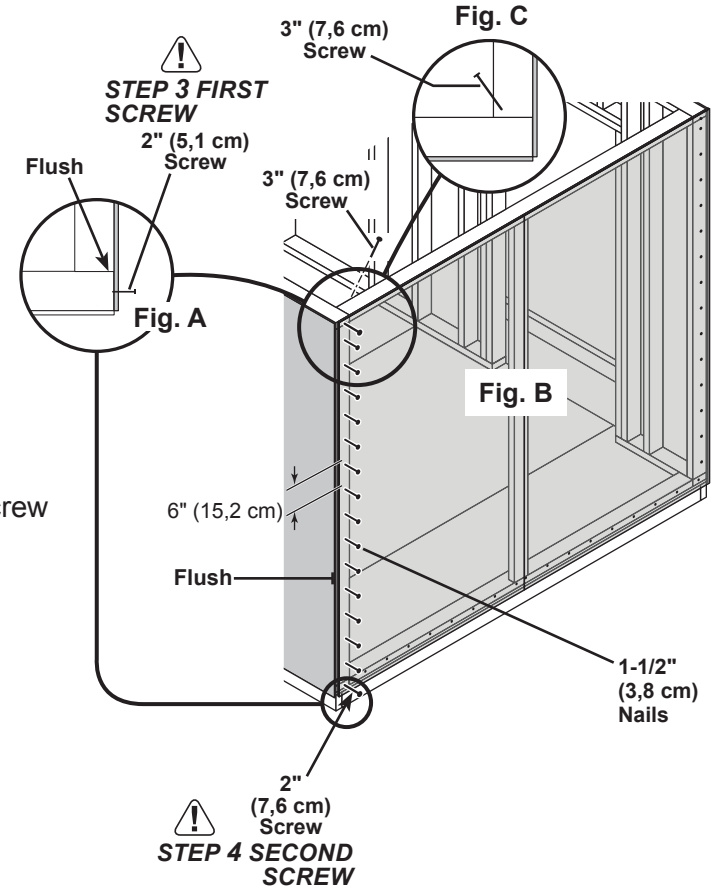

BACK WALL

PARTS REQUIRED:

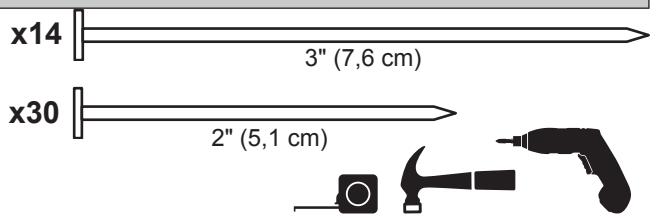

3 Nail lower edge of back wall panels to floor frame using 2" nails 6" apart. Angle nail to hit floor frame **(Fig. D)**.

Secure back wall bottom plates to floor using 3" nails **(Fig. D)**.

Remove temporary supports.

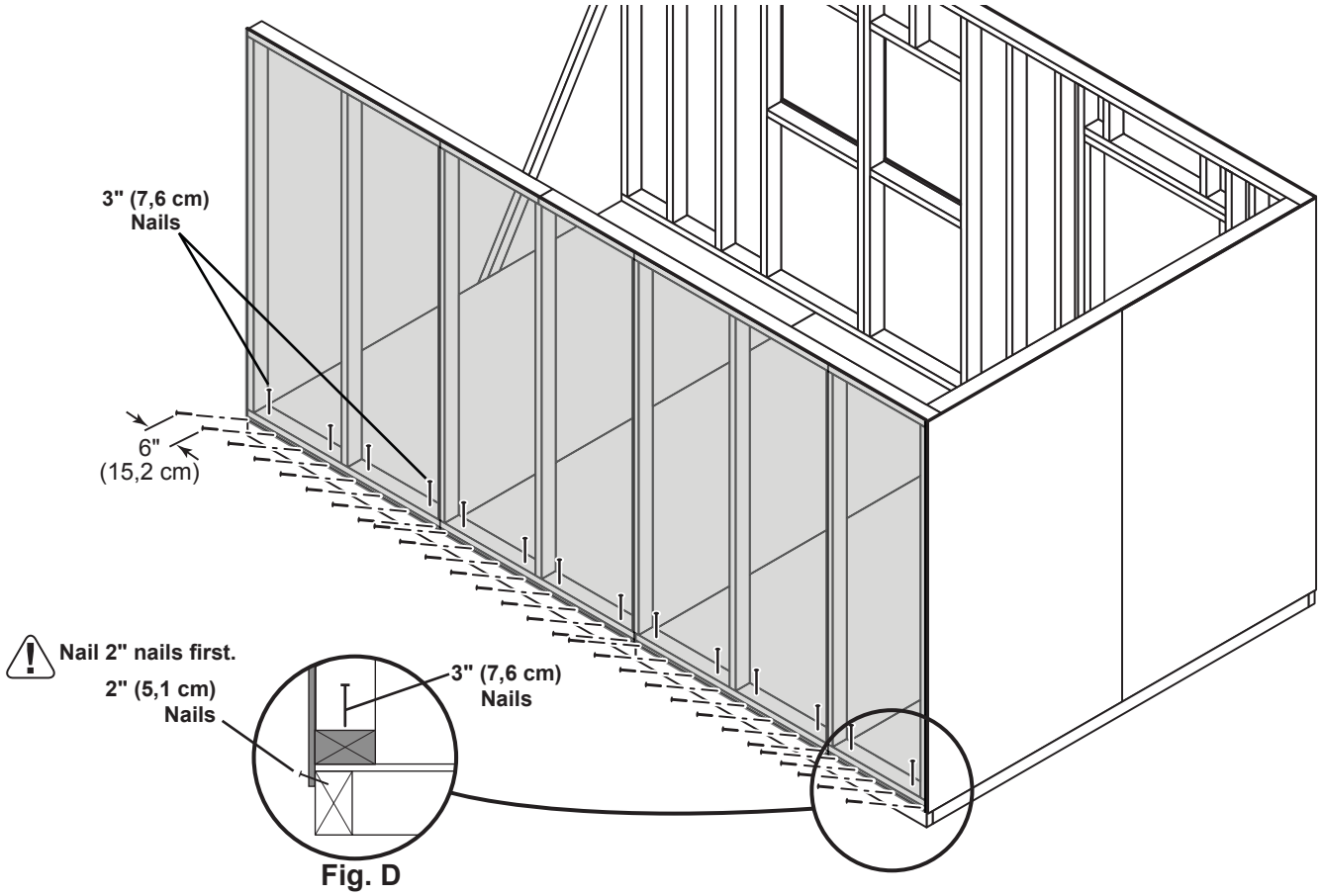

Fig. D

FINISH

You have finished standing your back wall.

GABLE DOOR WALL

PARTS REQUIRED:

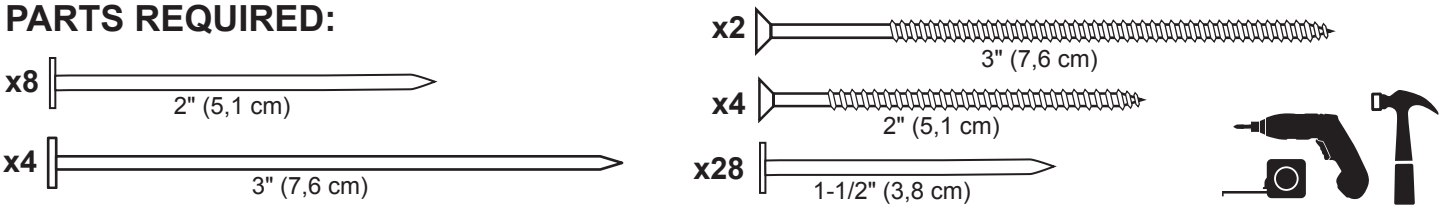

✓BEGIN

Stand gable door wall on floor.

⚠ It is important to secure the front wall in the following order:

1 Set gable door wall on floor and secure using one 2" screw **(Fig A)**.

⚠ **ENSURE TOP WALL FRAMES ARE FLUSH.** ⚠

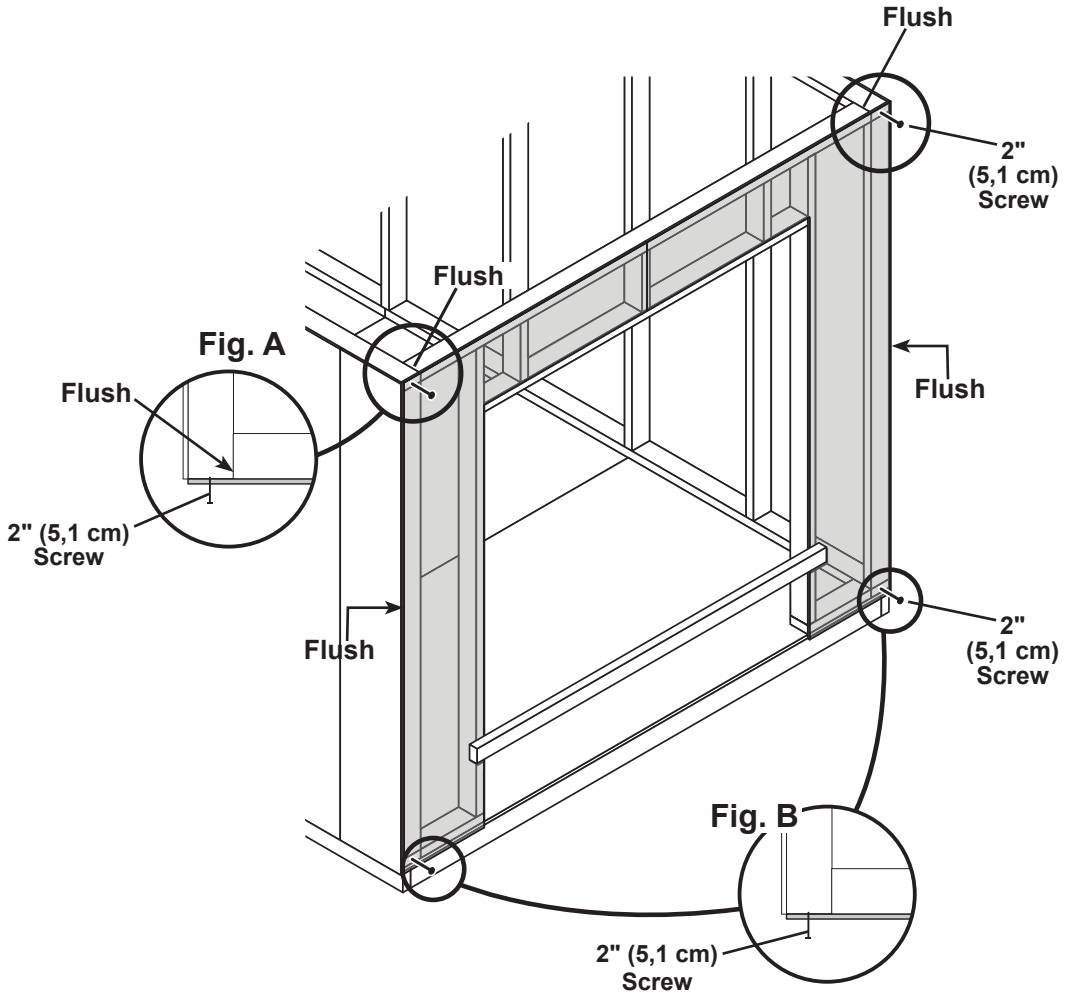

2 Move to the bottom of gable end wall and secure bottom of wall using one 2" screw into front and back wall bottom plates **(Fig B)**.

⚠ **ENSURE WALL PANELS ARE FLUSH BEFORE SECURING.**

GABLE DOOR WALL

PARTS REQUIRED:

3 Nail lower edge of panels to floor using 2" nails 6" apart. Angle nail to hit floor frame **(Fig. C)**.

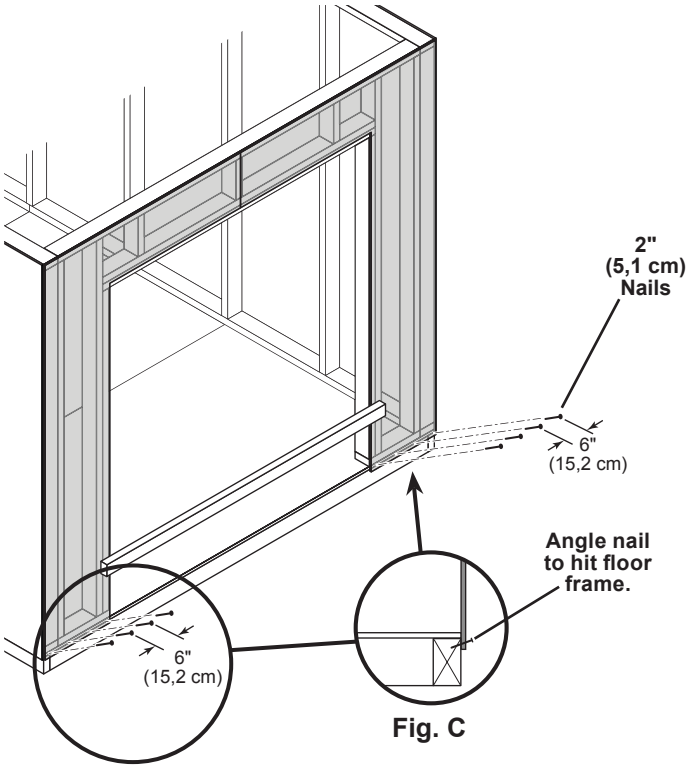

Fig. C

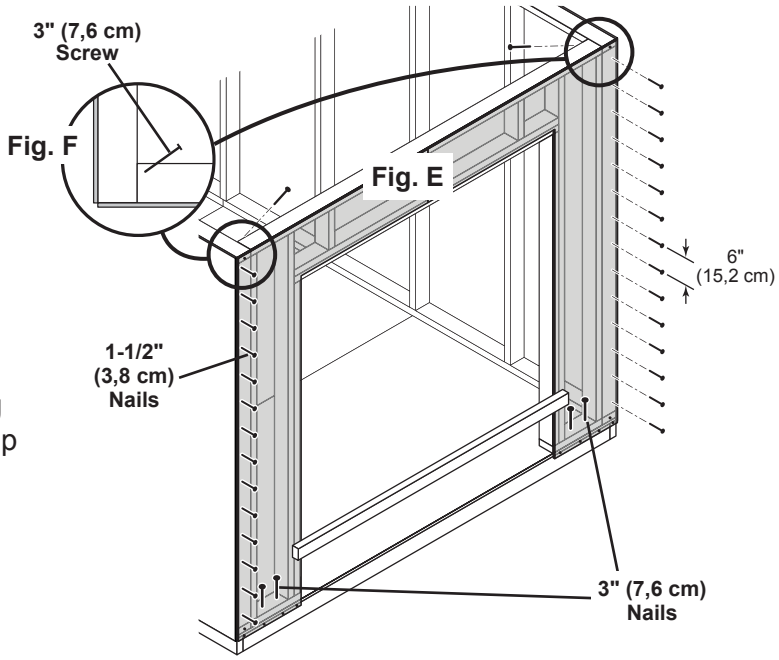

4 Nail gable wall panels to front and back wall studs using 1-1/2" nails 6" apart **(Fig. E)**.

Secure gable wall to floor using 3" nails **(Fig. E)**.

5 Secure gable door wall top frame 2 x 4 using 3" screws toe-screwed at each corner into top wall frames at an angle as shown in **(Fig. F)**.

6 Remove temporary support.

FINISH

You have finished standing your gable door wall.

GABLE UNITS

PARTS REQUIRED:

x2 PVA 2 x 4 x 6" (5,1 x 10,2 x 15,2 cm)

x2 PWA 2 x 4 x 10" (5,1 x 10,2 x 25,4 cm)

TEMPORARY SUPPORT

x2 AO 2 x 4 x 22-1/2" (5,1 x 10,2 x 57,1 cm)

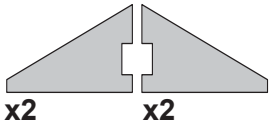

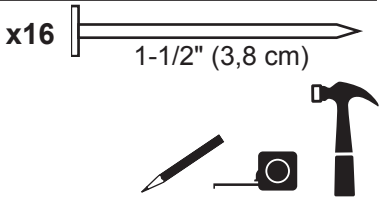

✓BEGIN

1 Orient parts on flat as shown. You will build **TWO** assemblies.

Place LEFT front gable panel as shown and secure using 1-1/2" nails as shown.

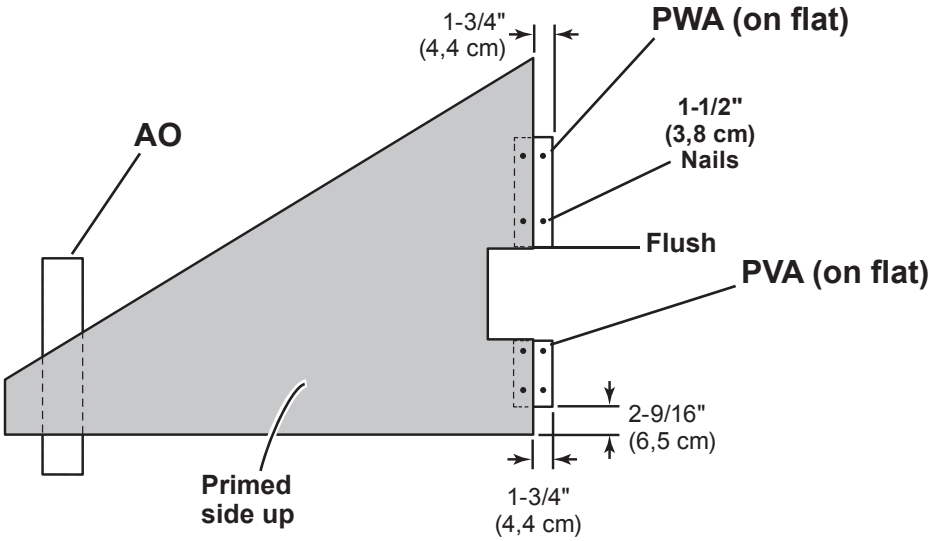

2 Place RIGHT front gable panel flush to left panel. Secure using 1-1/2" nails as shown.

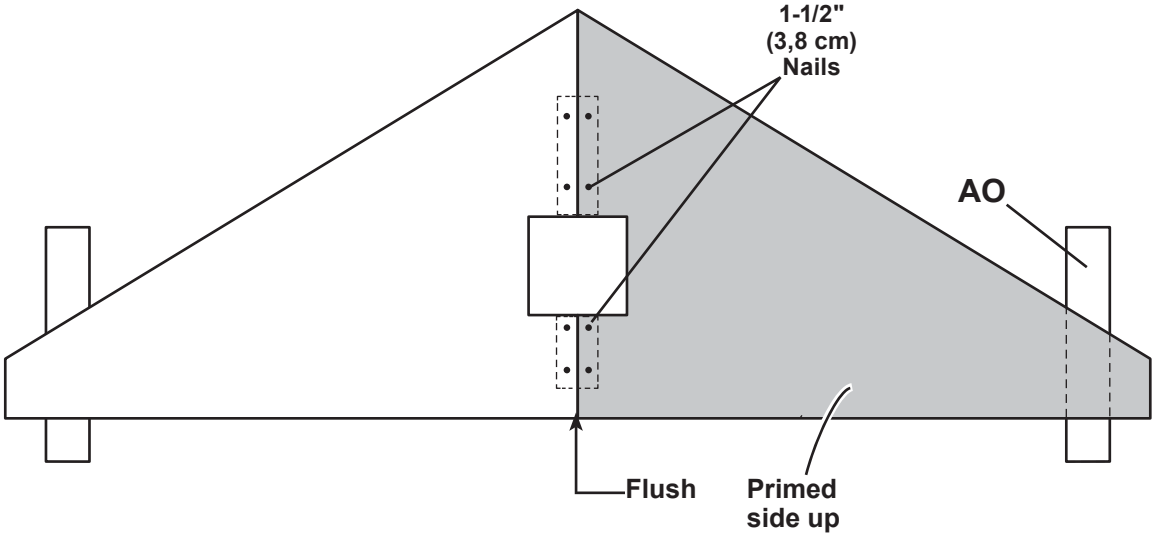

3 Repeat **Steps 1 - 2** to build second gable unit.

FINISH

You have finished assembling your gable units.

GABLE UNITS

PARTS REQUIRED:

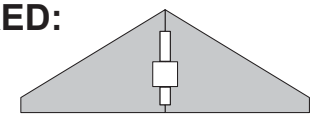

x2 Gable Units

x40 2" (5,1 cm)

x4 3" (7,6 cm)

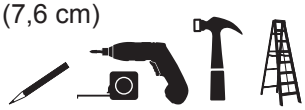

✓BEGIN

1 Install both gable units the same on both gable walls. Measure 2-9/16" down from top plate and mark at each side as shown **(Fig A)**.

⚠ Set gable unit on top plate **SZ**. **BE SURE GABLE UNIT IS CENTERED ON WALL BEFORE NAILING.**

2 First, hold gable unit secure with one 2" nail on each side, then secure with two 2" nails at top of gable panels into end rafter **(Fig. A)**.
Continue nailing lower edge of panels into top plate using 2" nails 6" apart as shown

3 On the inside, secure gable unit with 3" screws toe-screwed into **SZ** at an angle as shown in **(Fig. B)**.

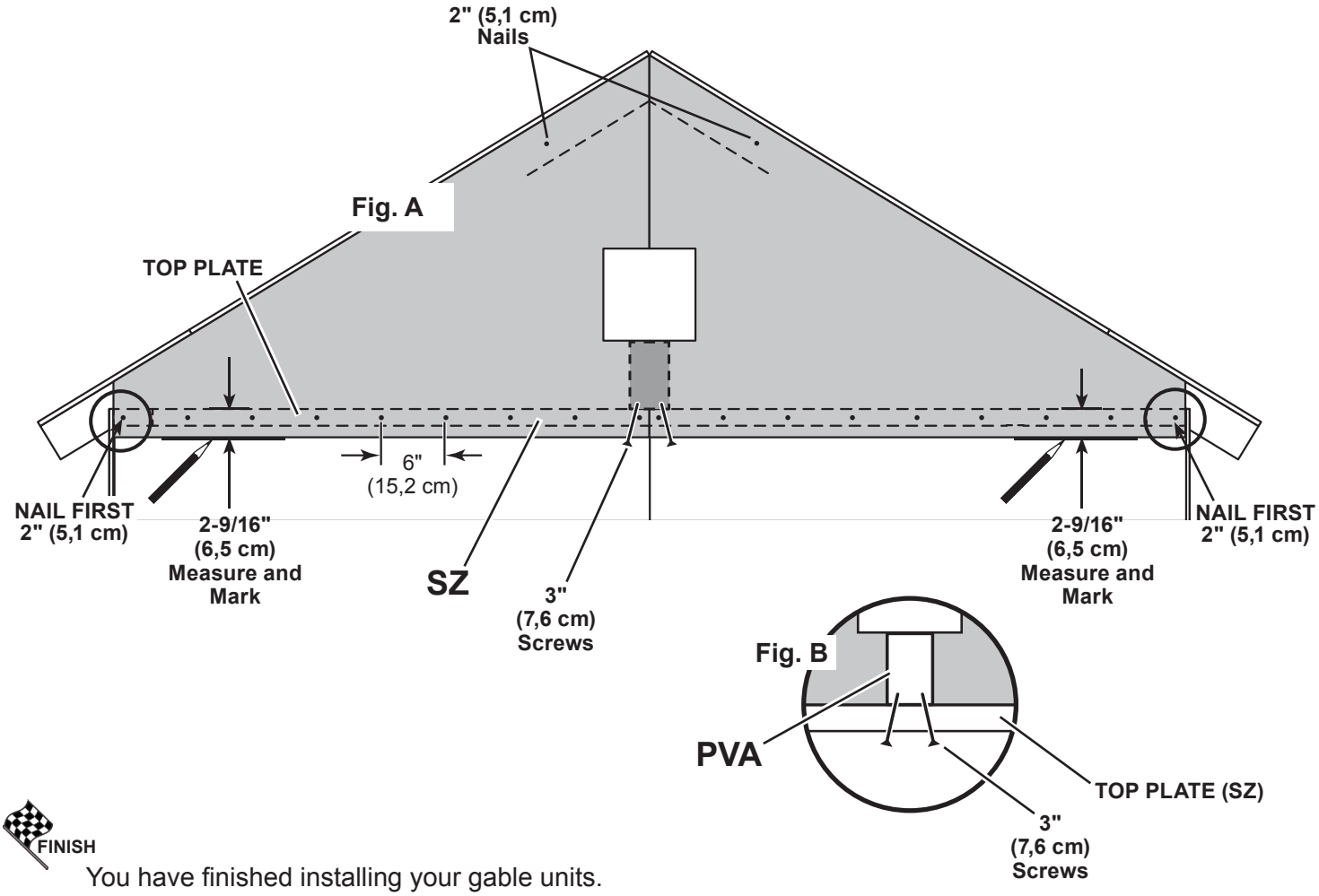

FINISH

You have finished installing your gable units.

LOFT

PARTS REQUIRED:

x1 **PT**
2 x 3 x 96" (5,1 x 7,6 x 243,8 cm)

x1 **TP**
2 x 4 x 96" (5,1 x 10,2 x 243,8 cm)

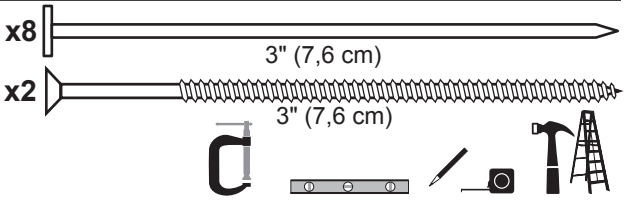

If your front wall has door to LEFT side, see Fig. A.
If your front wall has door to RIGHT side, see next page.

✓BEGIN

1 Measure and mark gable wall corner studs 1/2" down from top plates **(Fig. A)**.

Place and hold top of **PT** on 1/2" marks. Secure **PT** with (6) 3" nails.

2 Measure and mark back wall ***2nd stud*** and over-door crippler 1/2" down from top plates **(Fig. A)**.

Place and hold top of **TP** on 1/2" marks. Secure **TP** with 3" nails and 3" screws into over-door crippler.

Fig. A

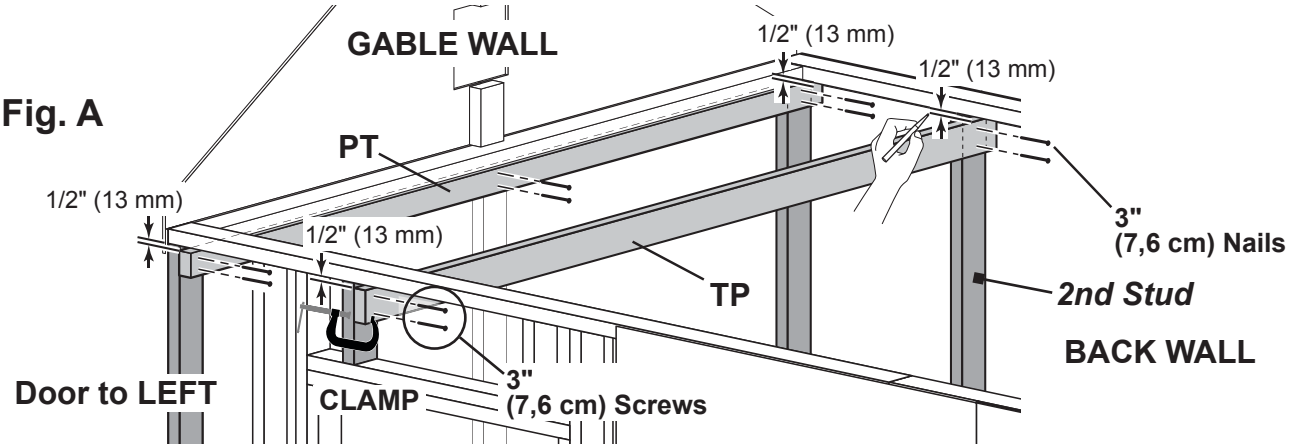

LOFT

PARTS REQUIRED:

x1 **PT**
2 x 3 x 96" (5,1 x 7,6 x 243,8 cm)

x1 **TP**
2 x 4 x 96" (5,1 x 10,2 x 243,8 cm)

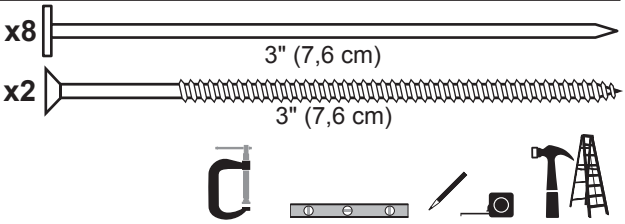

✓BEGIN

1 Measure and mark gable wall corner studs 1/2" down from top plates **(Fig. B)**.

Place and hold top of **PT** on 1/2" marks. Secure **PT** with (6) 3" nails.

2 Measure and mark **TP** 1/2" down from top plates at back wall ***2nd stud***.

Measure and mark **TP** 1/2" down from top plates at front wall ***3rd stud***.

Place and hold top of **TP** on 1/2" marks. Secure **TP** with 3" nails.

Fig. B

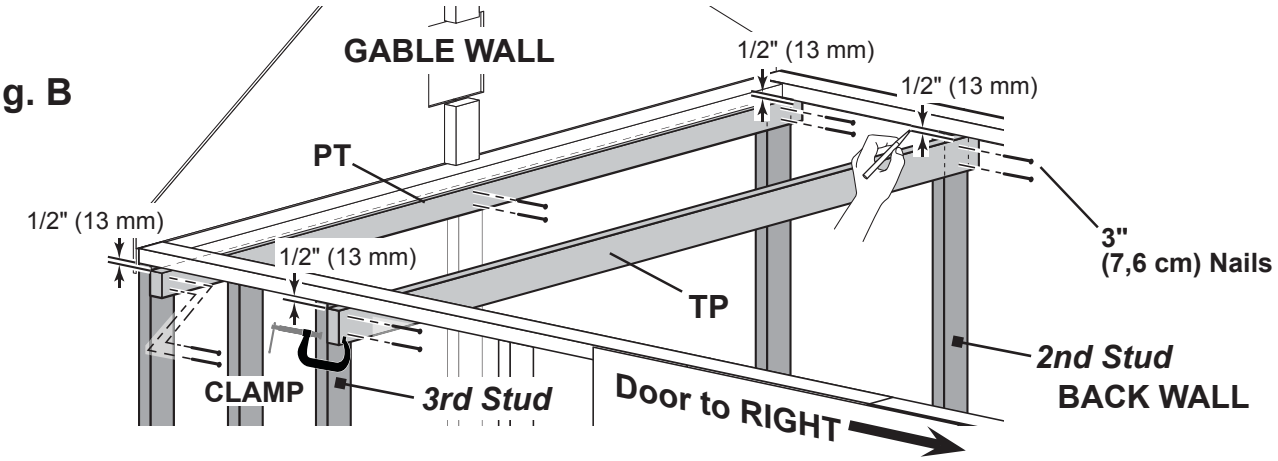

LOFT

PARTS REQUIRED:

x7

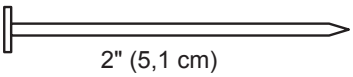

2" (5,1 cm)

x1

7/16 x 26-5/8 x 89" (1,1 x 67,6 x 226,1 cm)

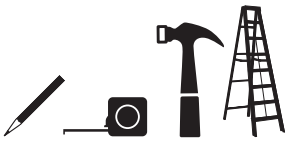

3 Place **7/16" x 26-5/8" x 89"** loft panel centered on loft supports.

Slide panel into gap at gable wall **(Fig. D)**.

Secure to loft frame using 2" nails evenly spaced.

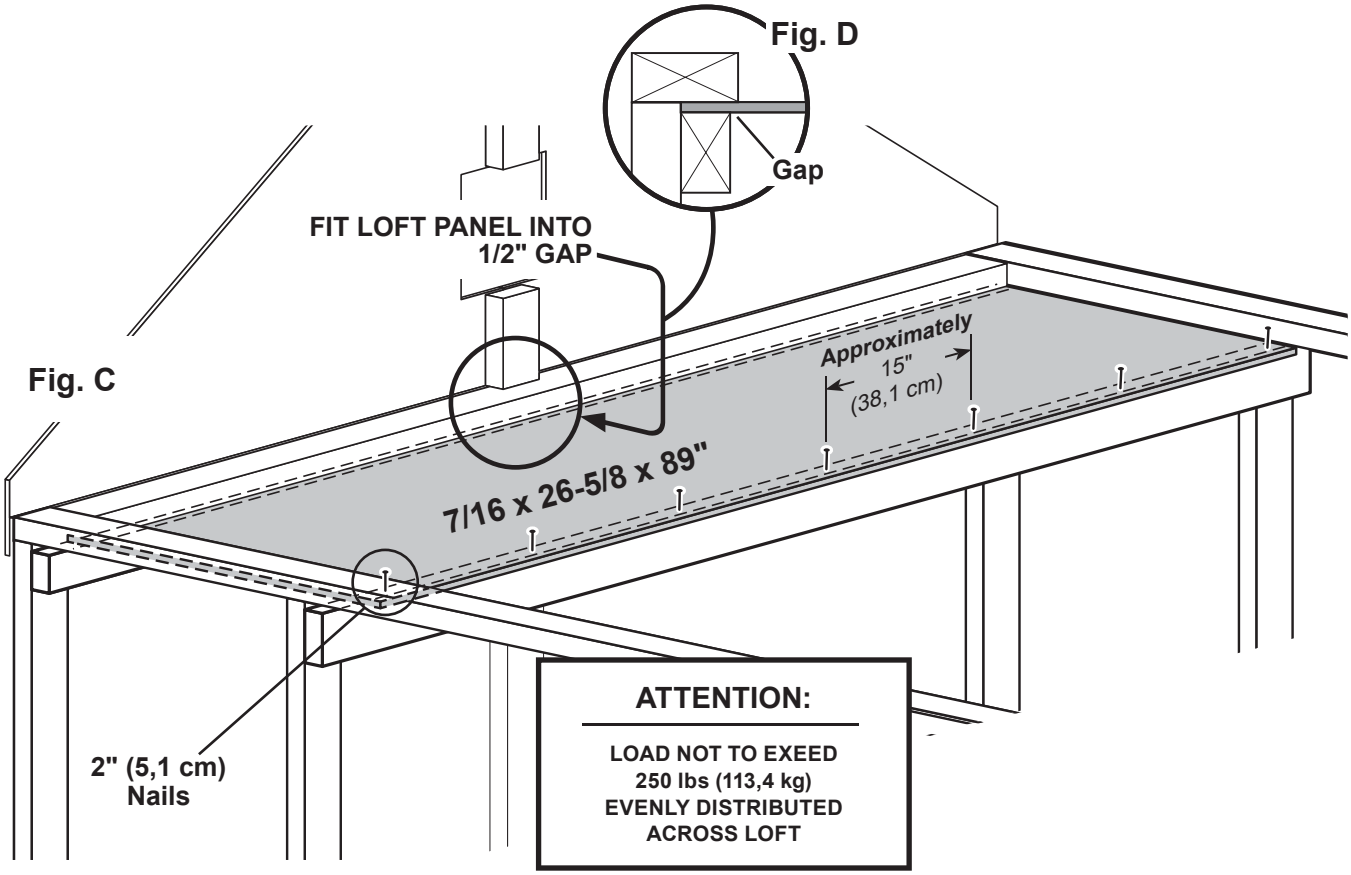

FINISH

You have finished installing your loft.

SHELVES

PARTS REQUIRED:

x2 **AED**
2 x 3 x 21-3/4" (5,1 x 7,6 x 55,2 cm)

x2 **PT**
2 x 3 x 96" (5,1 x 7,6 x 243,8 cm)

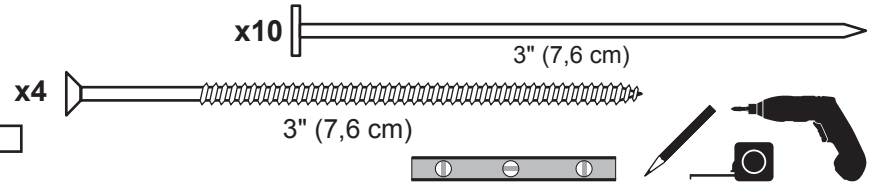

✓**BEGIN**

1 Measure and mark location for **AED (Fig. A, Fig. B)**.

Place loft support ledger boards **AED** between gable wall and eave wall stud with narrow side to wall panel **(Fig. A)**.

Secure each **AED** using (2) 3" screws toe-screwed at an angle at gable wall stud and 3" nails into eave wall stud as shown.

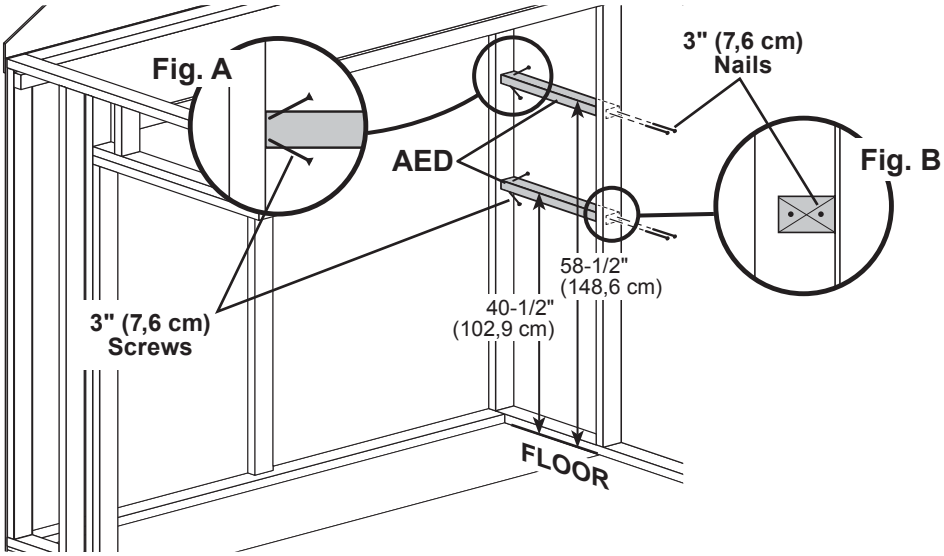

2 Mark locatins for both **PT** shelf supports.

Secure both **PT** using 3" nails as shown.

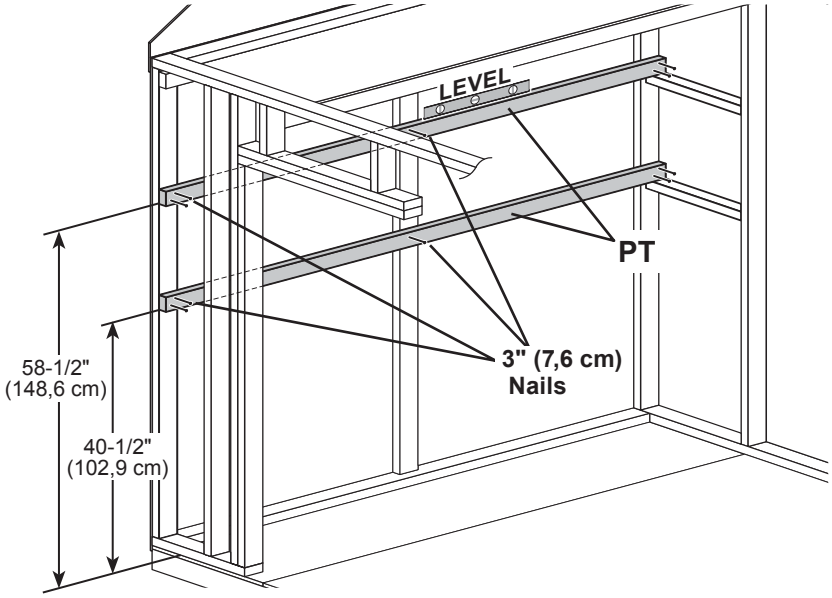

SHELVES

PARTS REQUIRED:

x2 7/16 x 10-1/2 x 89" (1,1 x 26,7 x 226,1 cm)

x2 PT 2 x 3 x 96" (5,1 x 7,6 x 243,8 cm)

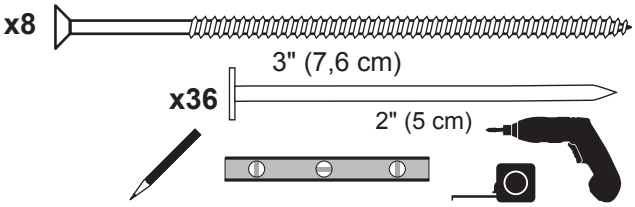

3 Measure and mark both **AED's** at the measurements shown from gable wall studs.
Mark front wall stud at the dimensions shown

Secure **PT's** using 3" screws at locations shown.

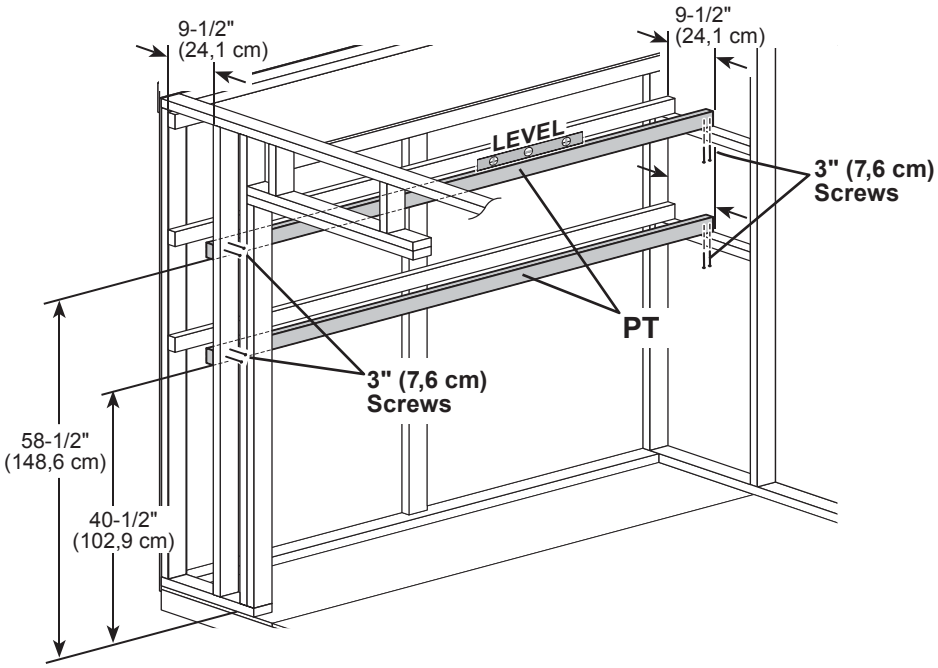

4 Place upper and lower **7/16" x 10-1/2" x 89"** shelf panels centered on **PT** shelf supports.
Ensure panel is flush to gable wall studs.
Secure each shelf with (18) 2" nails spaced evenly.

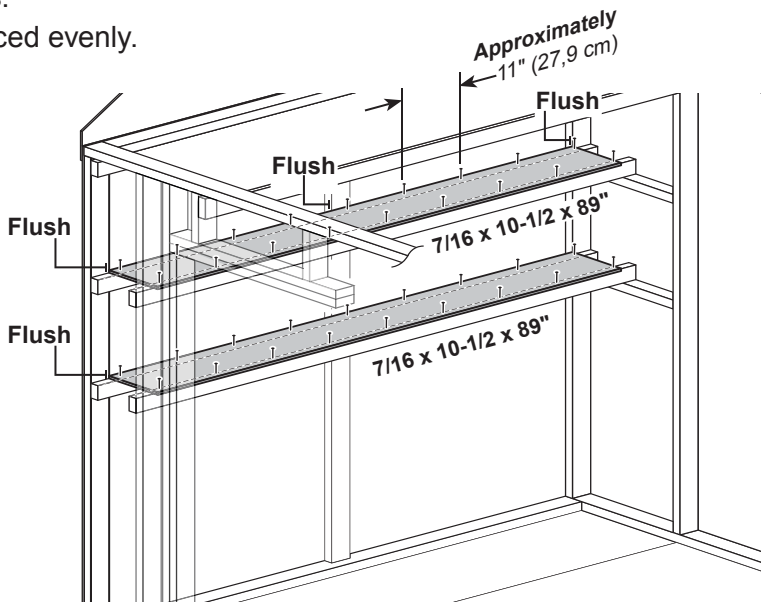

FINISH

You have finished installign your shelves.

RAFTERS

PARTS REQUIRED:

x6

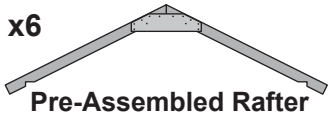

Pre-Assembled Rafter with 2 gussets

x2

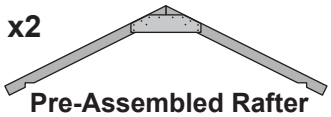

Pre-Assembled Rafter with 1 gusset

x28

3" (7,6 cm)

BEGIN

1 Locate first ***2 gusset rafter*** on top plate, aligned over studs at each side and tight to side wall **(Fig. A, Fig. B)**.

Secure rafter to top plate with two 3" screws above notch **(Fig. B)**.

2 Place remaining ***2 gusset rafters*** on top plate, aligned over studs as shown and secure with 3" screws **(Fig. B)**.

3 Locate and secure both ***1 gusset rafters*** 3/8" over top plate with one 3" screw above notch **(Fig. C)**.
NOTE: Gussets face inside of shed.

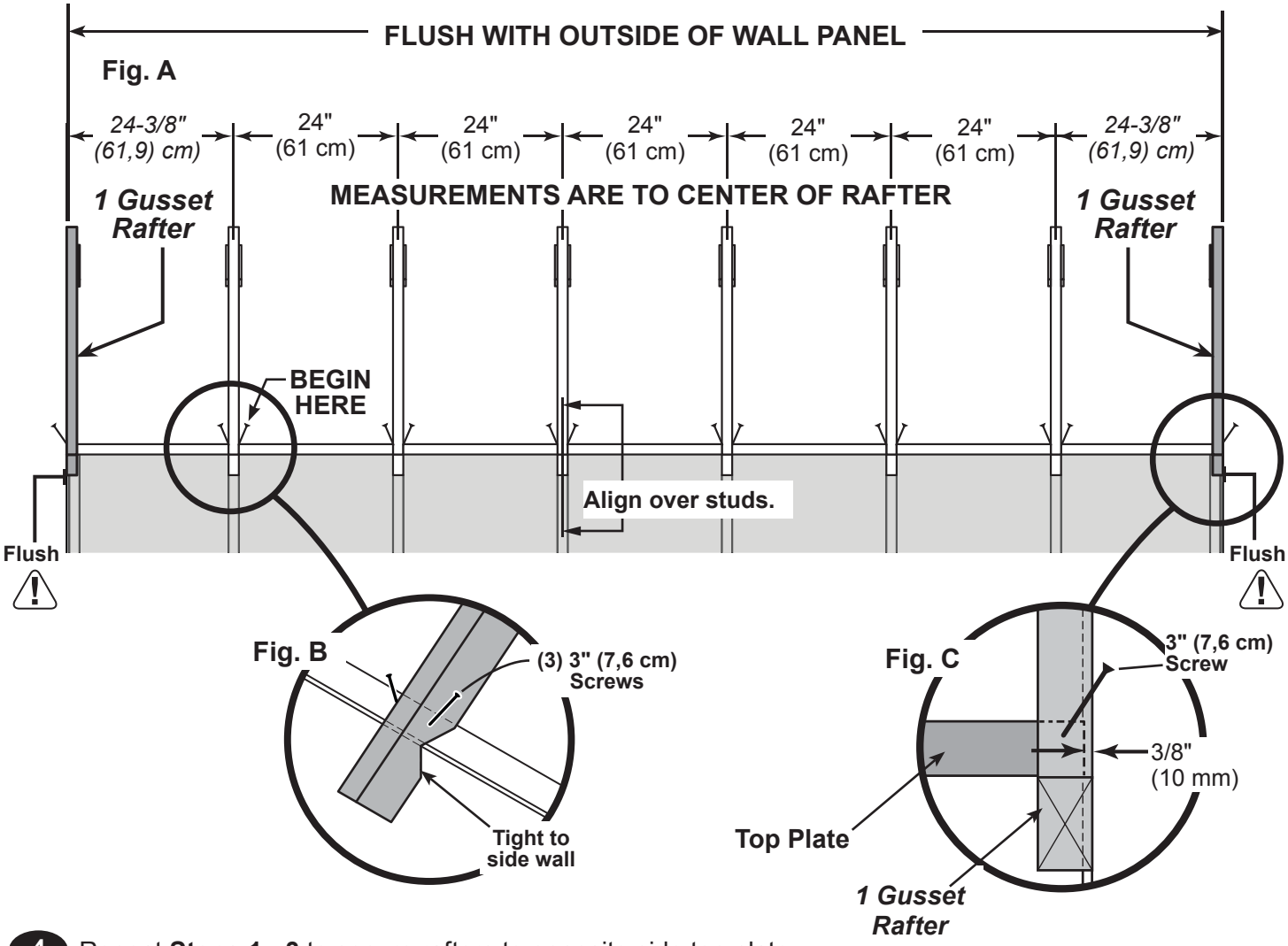

4 Repeat **Steps 1 - 3** to secure rafters to opposite side top plate.

FINISH

You have finished installing your rafters.

ROOF PANELS

PARTS REQUIRED:

x2 7/16 x 15-7/8 x 23-7/8" (1,1 x 40,3 x 60,6 cm)

x2 7/16 x 15-7/8 x 48" (1,1 x 40,3 x 121,9 cm)

x2 7/16 x 15-7/8 x 96" (1,1 x 40,3 x 243,8 cm)

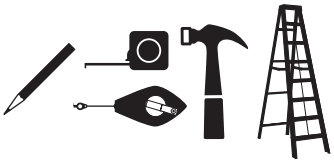

GAA 3/4" GAUGE BLOCK

x174 2" (5,1 cm)

x2 7/16 x 48 x 96" (1,1 x 121,9 x 243,8 cm)

x2 7/16 x 48 x 71-7/8" (1,1 x 121,9 x 182,6 cm)

Roof panels may cause serious injury until securely fastened.

✓BEGIN

1 Attach the **15-7/8" x 48"** panel with the rough side up (painted-grid lines side) with a 3/4" (1,9 cm) measurement on the rafter **(Fig A)**. The panel is flush at the gable end overhang **(Fig. B)**, and the panel is 1/2" from the end rafter **(Fig. C)**.

Secure panel with two 2" (5,1 cm) nails in the corners.

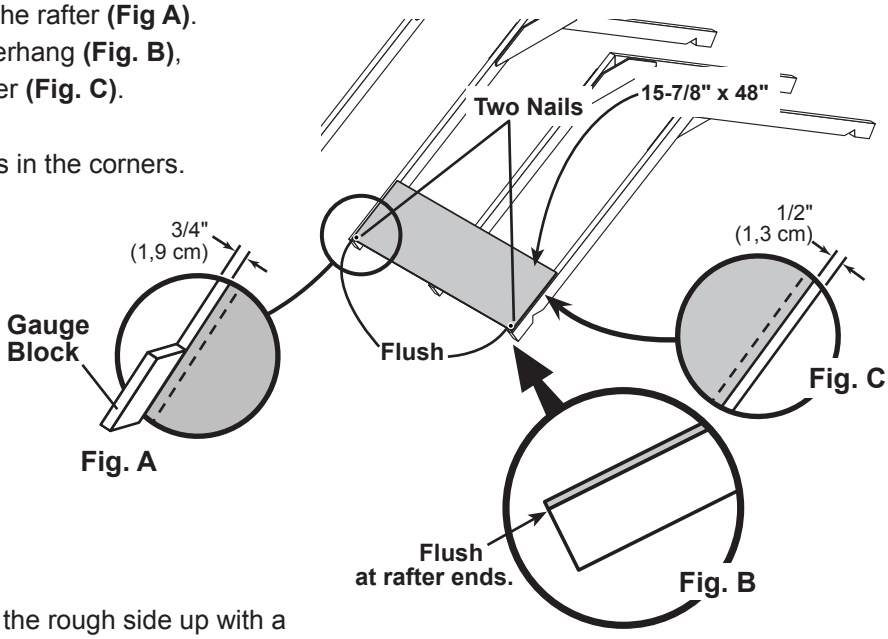

2 Attach a **15-7/8" x 96"** roof panel with the rough side up with a 3/4" (1,9 cm) measurement on the rafter **(Fig A)** and flush with the installed panel **(Fig. C)**.

Secure panel with two 2" (5,1 cm) nails in the corners.

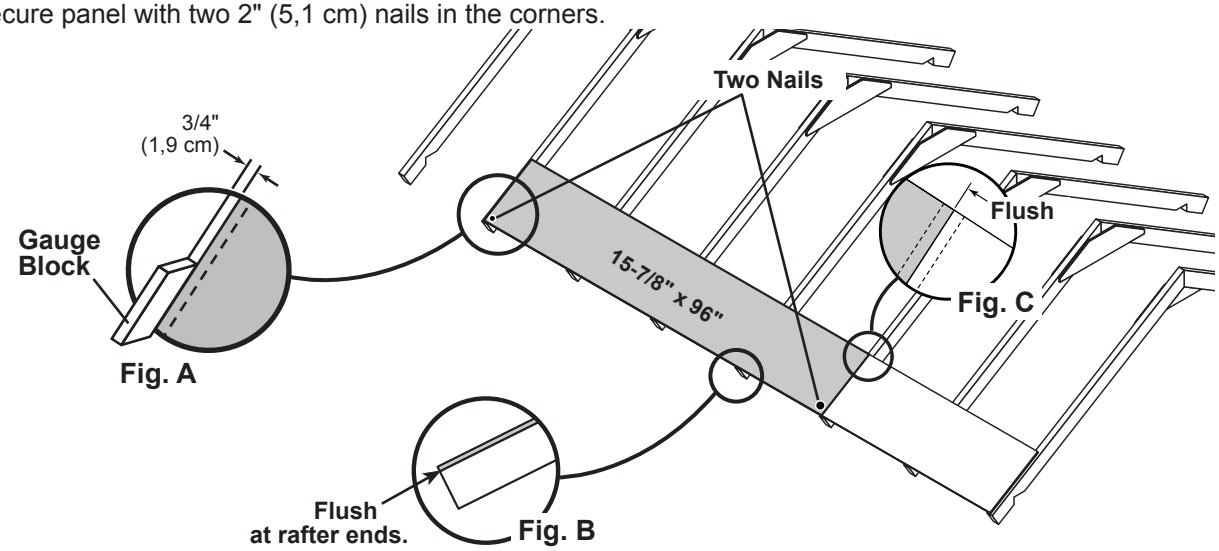

ROOF PANELS

PARTS REQUIRED:

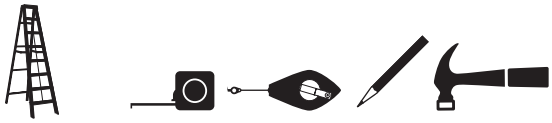

3 Attach a **15-7/8" x 23-7/8"** panel with the rough side up (painted-grid lines side), flush with the installed **15-7/8" x 96"** panel **(Fig A)**.
The panel is flush at the gable end overhang **(Fig. B)**,
and the panel is 1/2" from outside of the end rafter **(Fig. C)**.

Secure panel with two 2" (5,1 cm) nails in the corners.

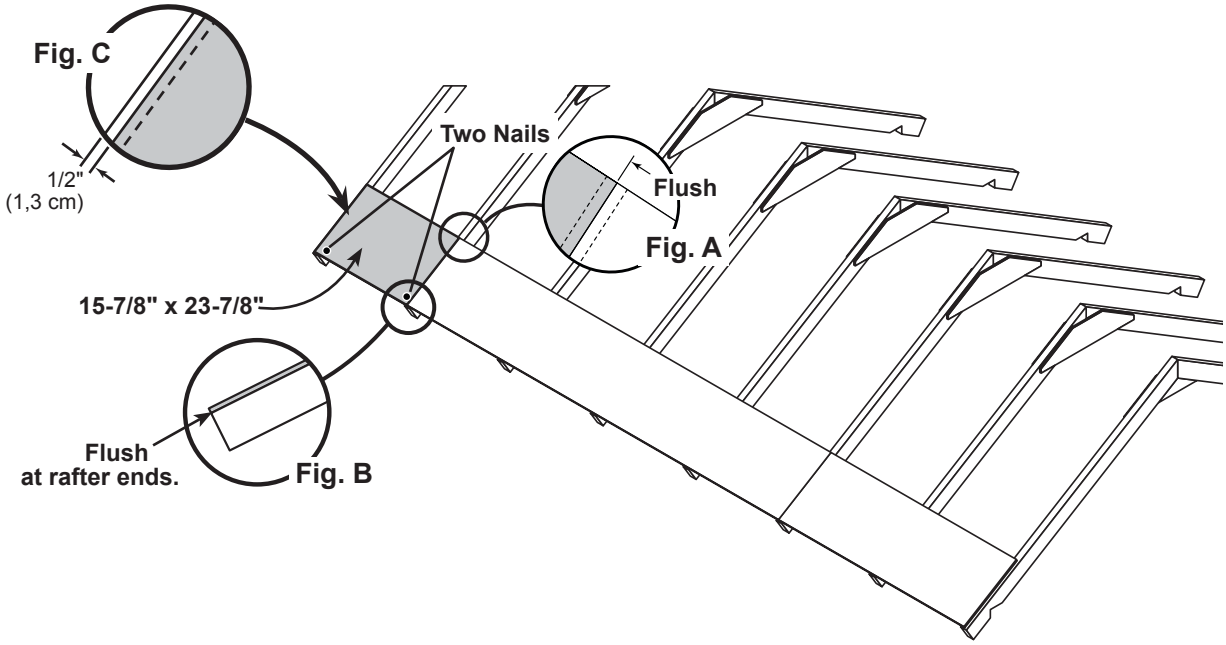

4 Secure the roof panels using 2" nails 6" apart on edges and 12" apart inside panel.

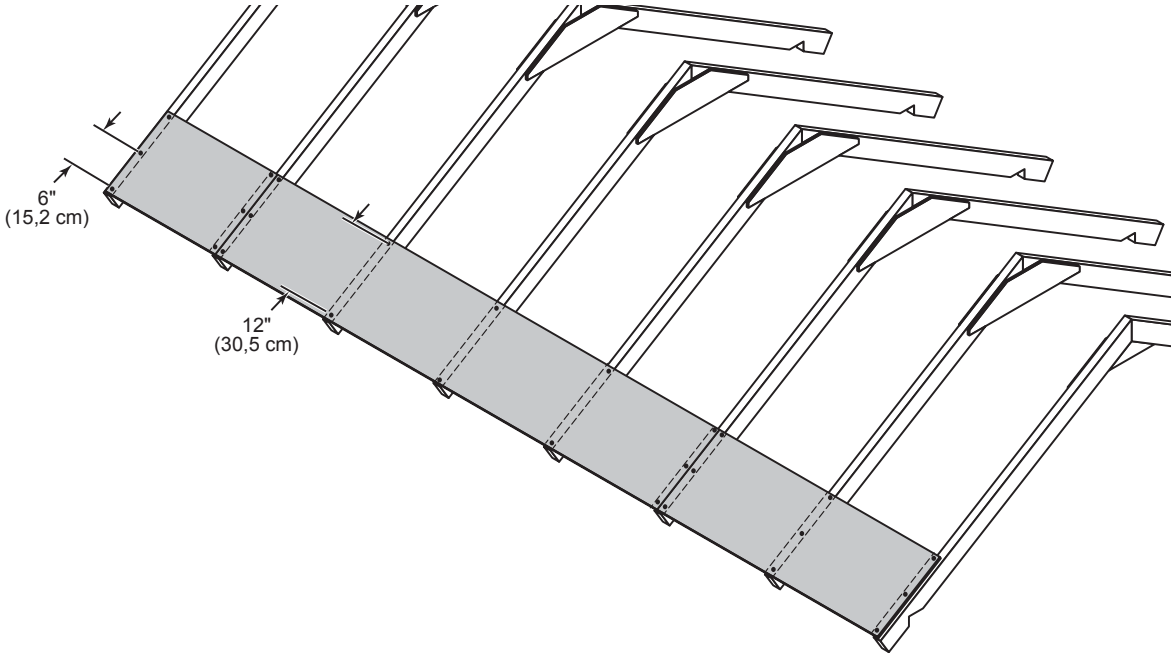

ROOF PANELS

PARTS REQUIRED:

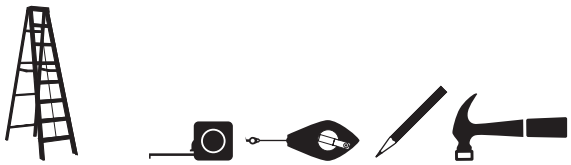

5 Place a **48" x 96"** upper roof panel with the rough side up and flush to lower panels.

Ensure 1/2" gap at gable end rafter **(Fig. B)** and 3/4" measurement on the rafter **(Fig. A)**.

Secure the lower edge of roof panel using two 2" nails in corners as shown.

Move up to the top of the panel and keep spacing between the center of the rafters **(Fig. C)**.

Secure with one 2" nail into each rafter **(Fig. C)**.

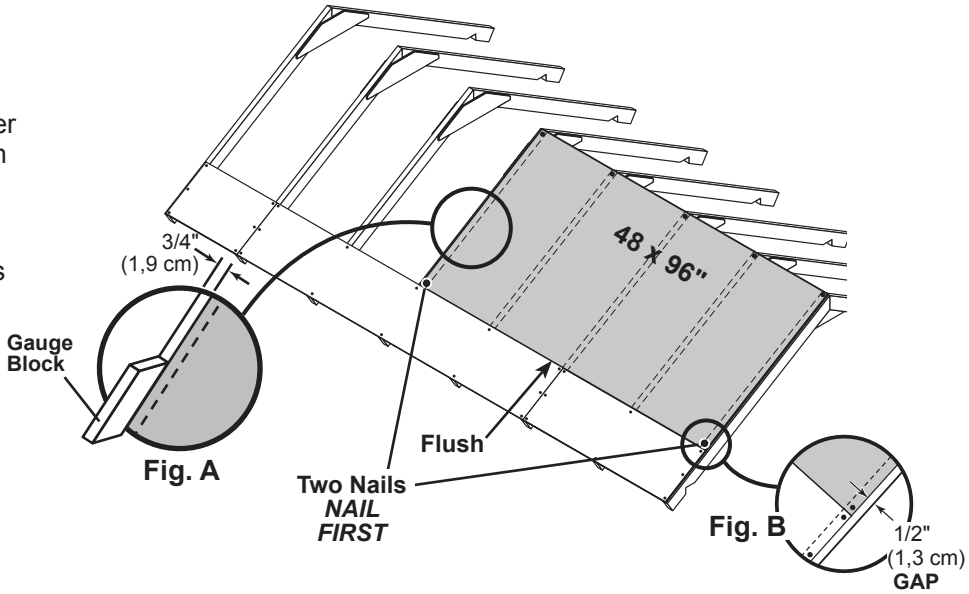

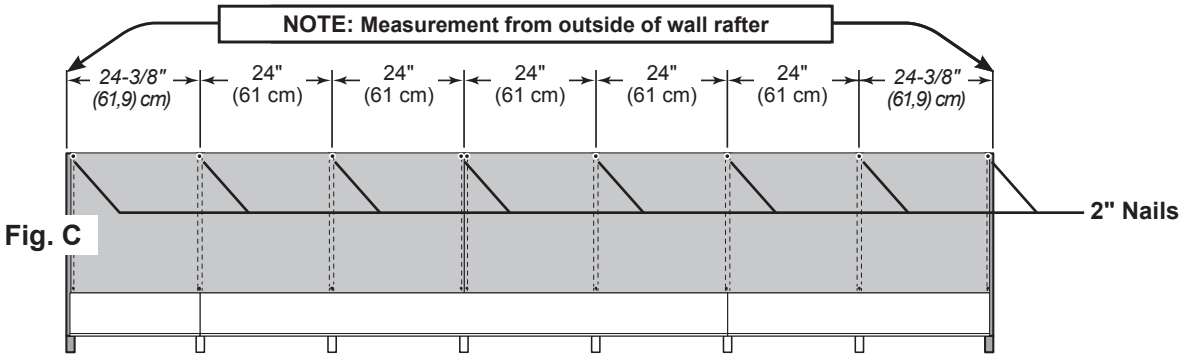

6 Place a **48" x 71-7/8"** upper roof panel, rough side up and flush with the installed **48" x 96"** panel **(Fig. D)**.

Ensure 1/2" gap at gable end rafter **(Fig. E)**.

Secure the lower edge of roof panel using two 2" nails in corners as shown.

Move up to the top of the panel and keep spacing between the center of the rafters **(Fig. C)**.

Secure with one 2" nail into each rafter **(Fig. C)**.

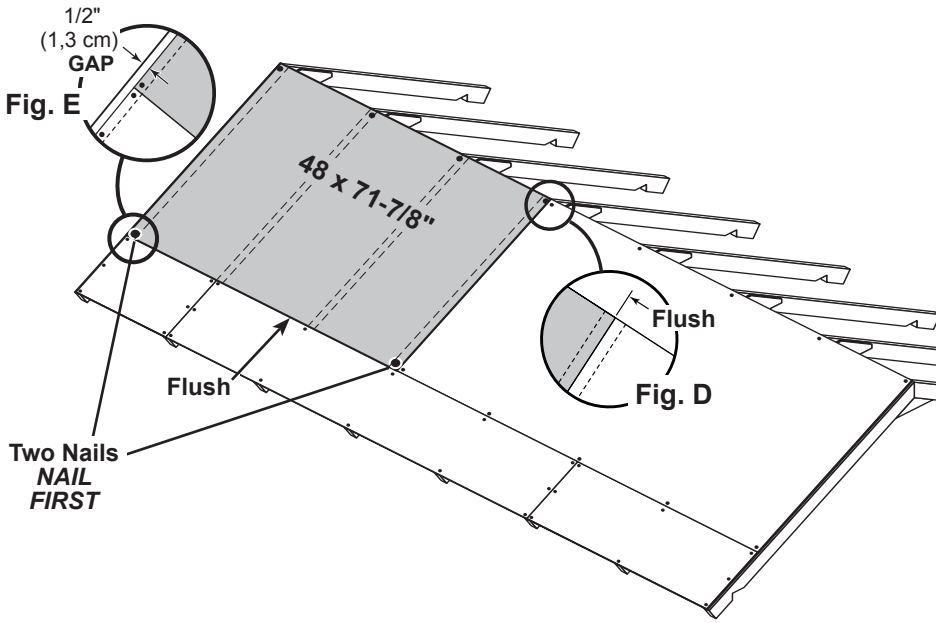

ROOF PANELS

PARTS REQUIRED:

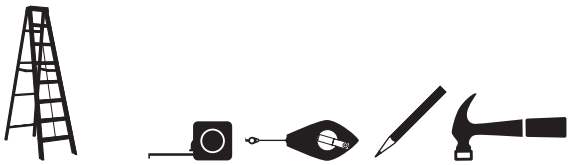

7 Nail the roof panels using 2" nails 6" apart on edges and 12" apart inside panel.

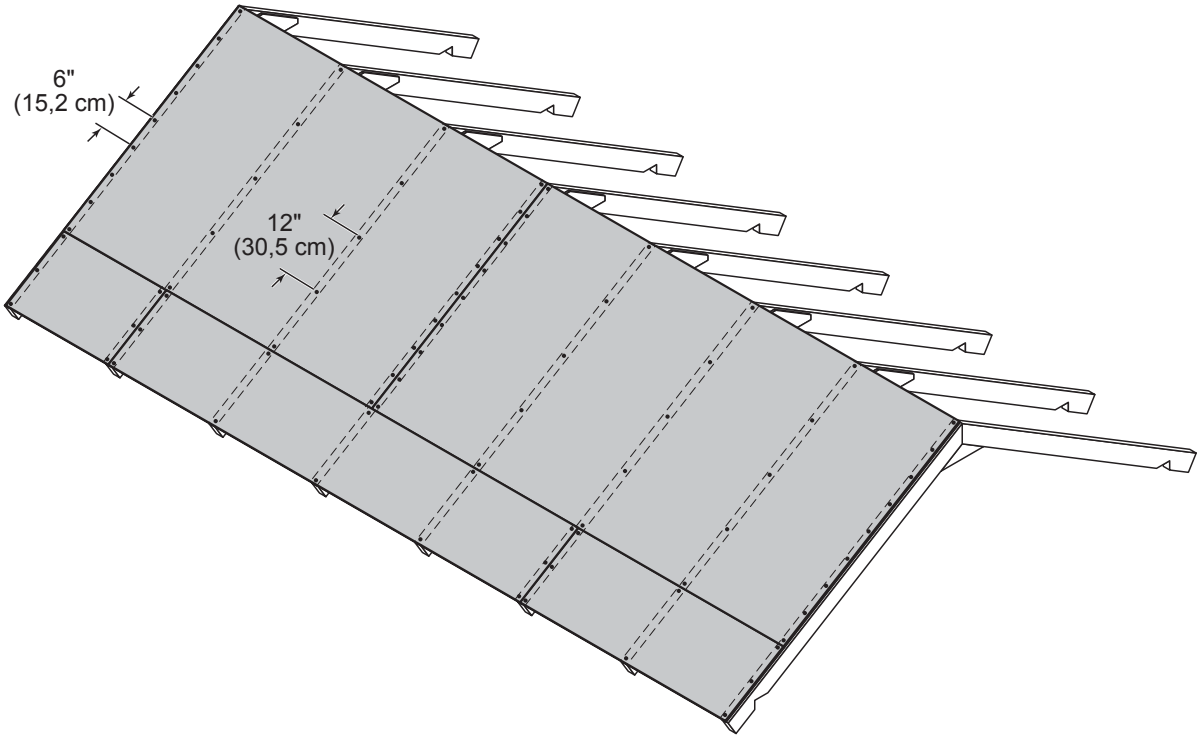

8 Repeat process to attach roof panels on the opposite side.

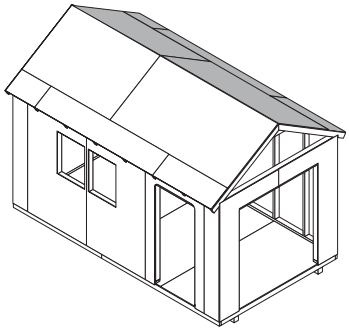

FINISH

You have finished installing your roof panels.

GABLE TRIM

PARTS REQUIRED:

x4 ATA
2 x 4 x 64-1/8" (5,1 x 10,2 x 162,9 cm)

x2 LEFT
3/8 x 4-3/4 x 64-1/8" (1 x 12,1 x 162,9 cm)

x2 RIGHT
3/8 x 4-3/4 x 64-1/8" (1 x 12,1 x 162,9 cm)

x24
1-1/2" (3,8 cm)

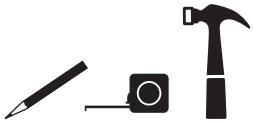

You will build two LEFT and two RIGHT gable trim units.

✓BEGIN

1 Orient parts on floor. Line up **3/8" x 4-3/4" x 64-1/8"** trim primed side down on top of **ATA**. Trim is flush with **ATA** at end and along edges as shown **(Fig. A)**.

Secure with 1-1/2" nails spaced evenly (approximately 12" (30,5 cm).

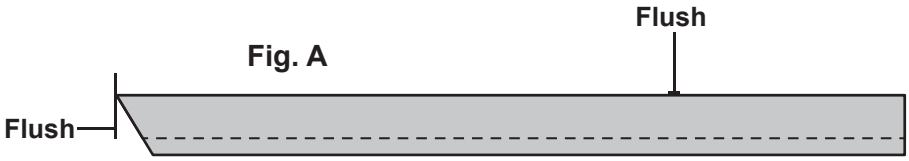

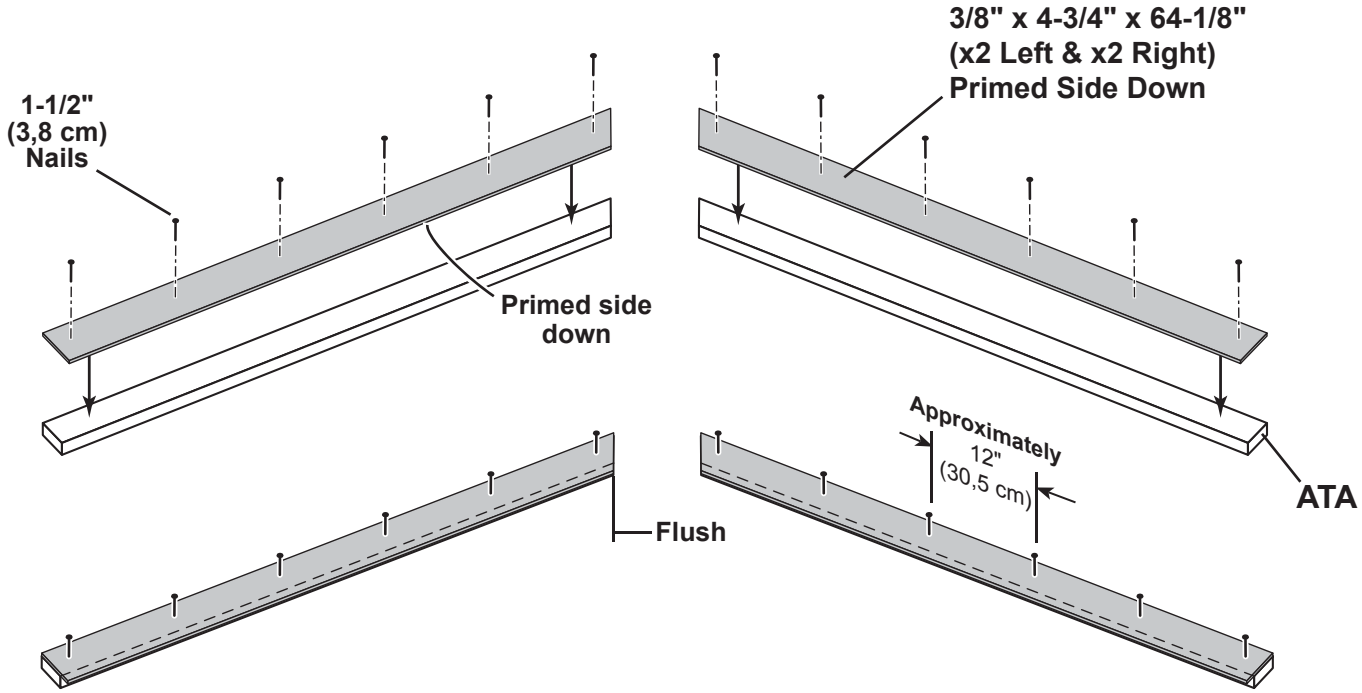

FINISH

You have finished your gable trim units.

GABLE TRIM

PARTS REQUIRED:

x2 RIGHT gable trim unit

x2 LEFT gable trim unit

x16 3" (7,6 cm)

BEGIN

1 Line up **RIGHT gable trim unit** flush to gable panel center seam and flush with roof sheathing **(Fig. A, Fig. B)**.

Secure with 3" screws into end rafter and spaced evenly (approximately 24" (61 cm).

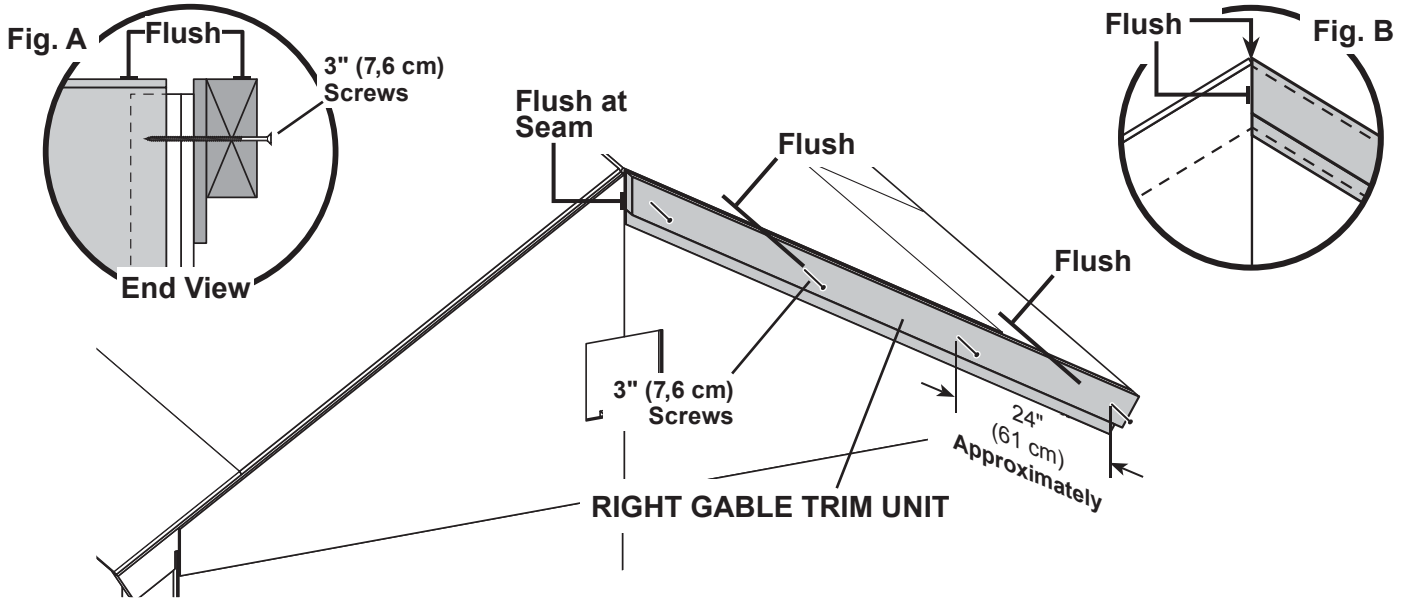

2 Line up **LEFT gable trim unit** flush to **RIGHT gable trim unit** and flush with roof sheathing **(Fig. A, Fig. B)**. Check gable trim units are flush at peak.

Secure with 3" screws into end rafter and spaced evenly (approximately 24" (61 cm).

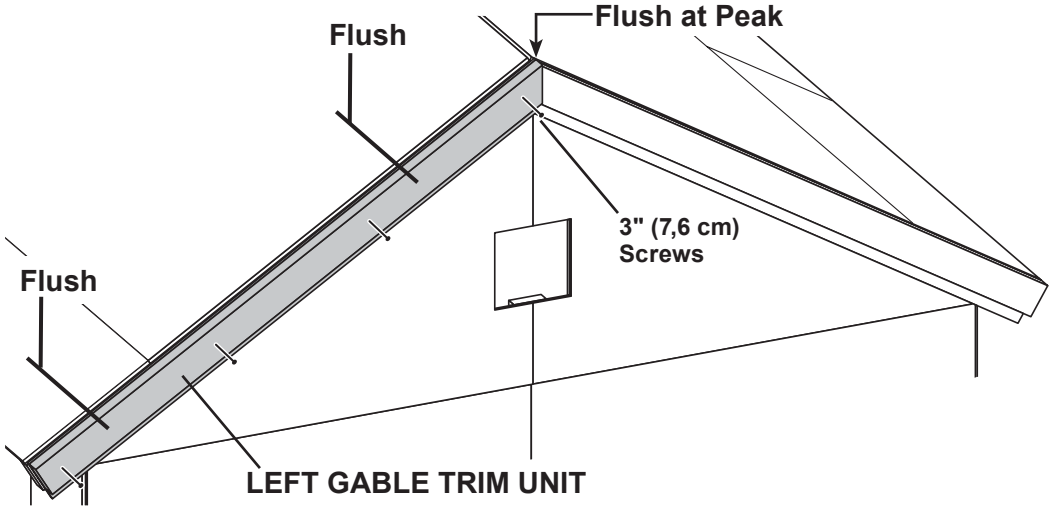

3 Repeat **Steps 1 - 2** for opposite side.

FINISH

You have finished installing your gable trim units.

GABLE TRIM

PARTS REQUIRED:

x4 3/8 x 4-3/4 x 54-5/8" (1 x 12,1 x 138,7 cm)

x2 Keystone 3/8 x 10 x 17" (1 x 25,4 x 43,2 cm)

x48 2" (5,1 cm)

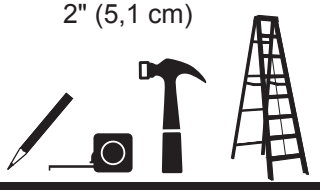

✓BEGIN

1. Line up (10" x 17") **Keystone** flush to gable unit peak and flush with roof sheathing **(Fig. A)**.

   Secure with 2" finish nails into gable unit in pattern shown.

2. Place fascia **4-3/4" x 54-5/8"** flush to **Keystone** and flush with roof sheathing **(Fig. B)**.

   Secure with 2" finish nails into gable unit and spaced evenly (approximately 18" (46 cm).

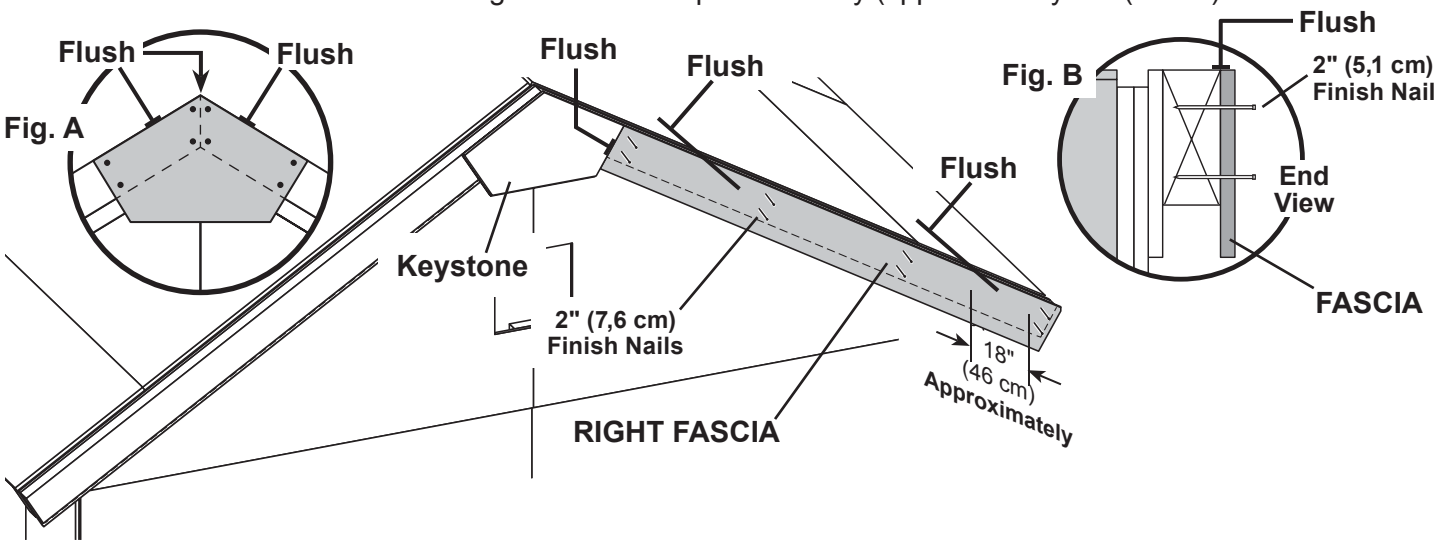

3. Place **LEFT fascia** flush to **Keystone** and flush with roof sheathing **(Fig. B)**.

   Secure with 2" finish nails into gable unit and spaced evenly (approximately 18" (20,3 cm).

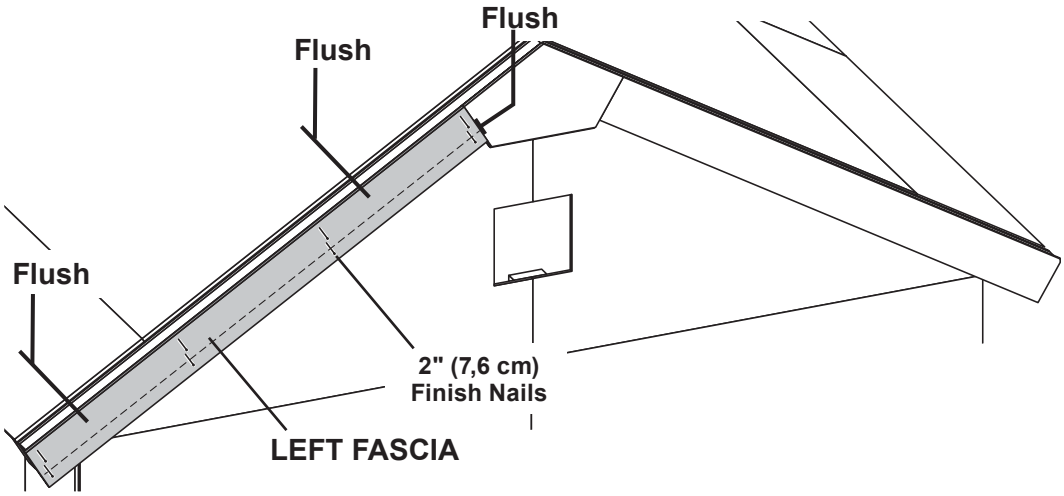

4. Repeat **Steps 1 - 3** for opposite side.

FINISH

You have finished installing your gable fascia and keystone.

EAVE SIDE SOFFITS

PARTS REQUIRED: **x2** **AO** 2 x 4 x 22-1/2" (5,1 x 10,2 x 57,1 cm) **x36** 2" (5,1 cm)

x2 3/8 x 4-7/8 x 73-1/2" (1 x 12,4 x 186,7 cm)

x4 3" (7,6 cm)

x2 3/8 x 4-7/8 x 96" (1 x 12,4 x 243,8 cm)

Ensure soffit boards are flush at rafter ends (Fig. B) and flush at seam.

BEGIN

1 Place eave nailer **AO** between two center rafters as shown.

Keep **AO** flush to the outside edge of rafter **(Fig. A, Fig. B)**.

Pre-drill a 1/8" hole through center rafters into **AO** to avoid splitting rafter. Secure with 3" screws **(Fig. A)**.

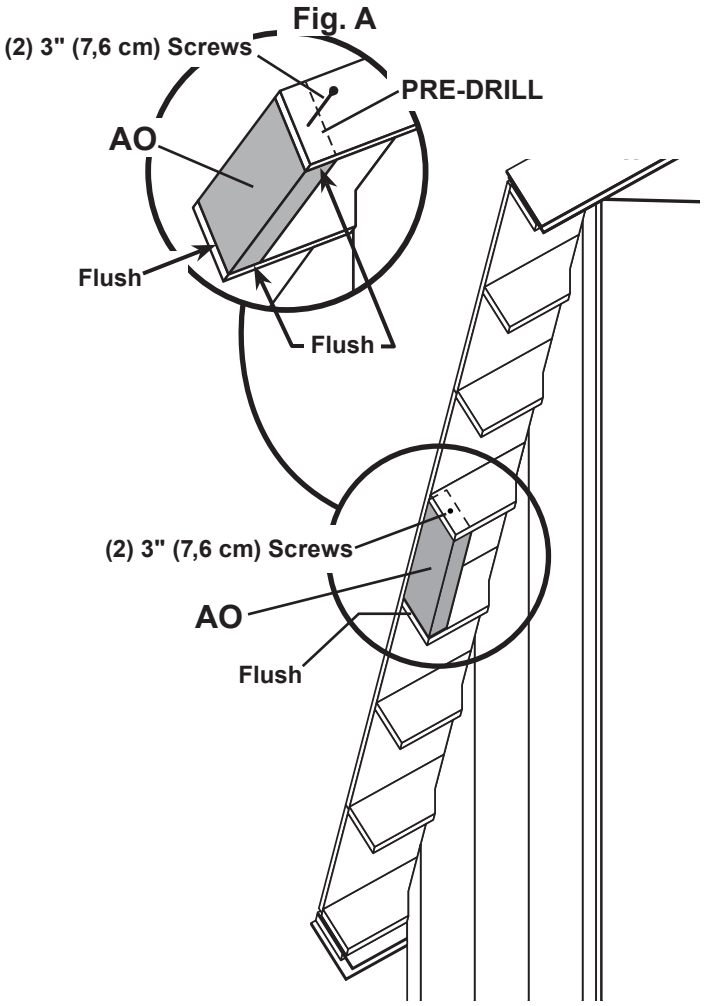

EAVE SIDE SOFFITS

PARTS REQUIRED:

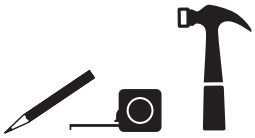

2 Place **96"** soffit board primed side down, flush to gable trim unit and rafter ends **(Fig B)**. Secure using 2" finish nails, two in each rafter and two into edge of **AO** as shown.

3 Position **73-1/2"** soffit board primed side down flush to gable trim unit and rafter ends **(Fig B)**. Secure using 2" finish nails, two in each rafter.

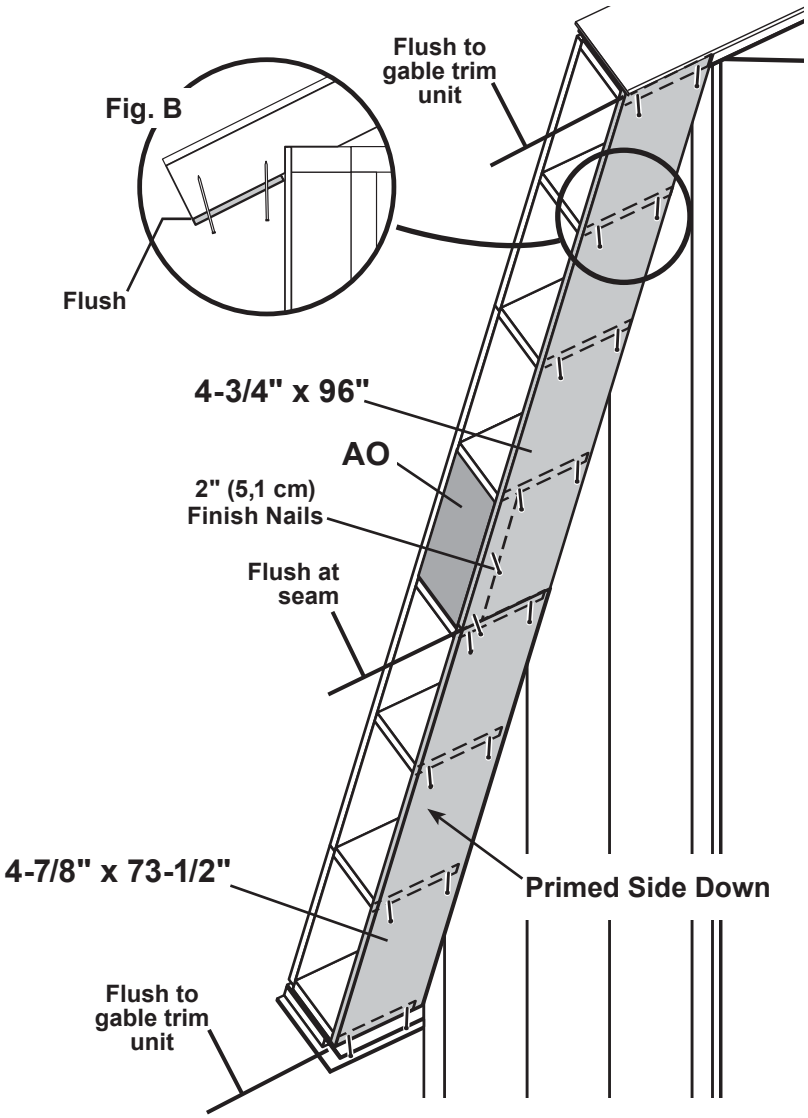

4 Repeat **Steps 1 - 3** to attach eave nailer and soffit boards on the opposite side.

FINISH

You have finished installing your eave nailer and soffit boards.

EAVE SIDE FASCIA

PARTS REQUIRED:

x36 2" (5,1 cm)

x2 3/8 x 4-3/4 x 77-1/4" (1 x 12,1 x 196,2 cm)

x2 3/8 x 4-3/4 x 96" (1 x 12,1 x 243,8 cm)

BEGIN

1. Place **77-1/4"** soffit board primed side down, flush to gable trim unit and roof sheathing **(Fig A)**. Secure using 2" finish nails, two in each rafter and two into face of **AO** as shown.

2. Place **96"** soffit board primed side down, flush to gable trim unit and roof sheathing **(Fig A)**. Secure using 2" finish nails, two in each rafter and two into face of **AO** as shown.

3. Repeat **Steps 1 - 2** to attach eave nailer and soffit boards on the opposite side.

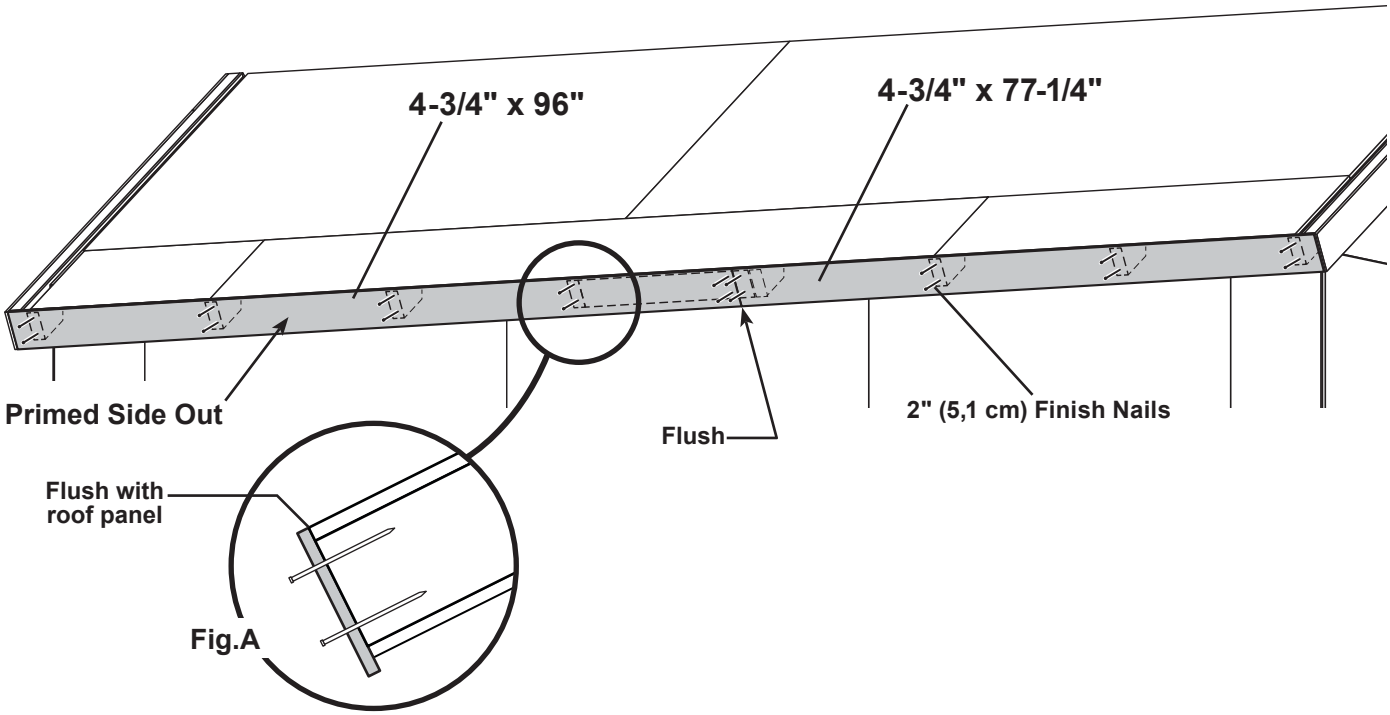

FINISH

You have finished installing your eave side fascia.

DOUBLE DOORS - GABLE WALL

PARTS REQUIRED:

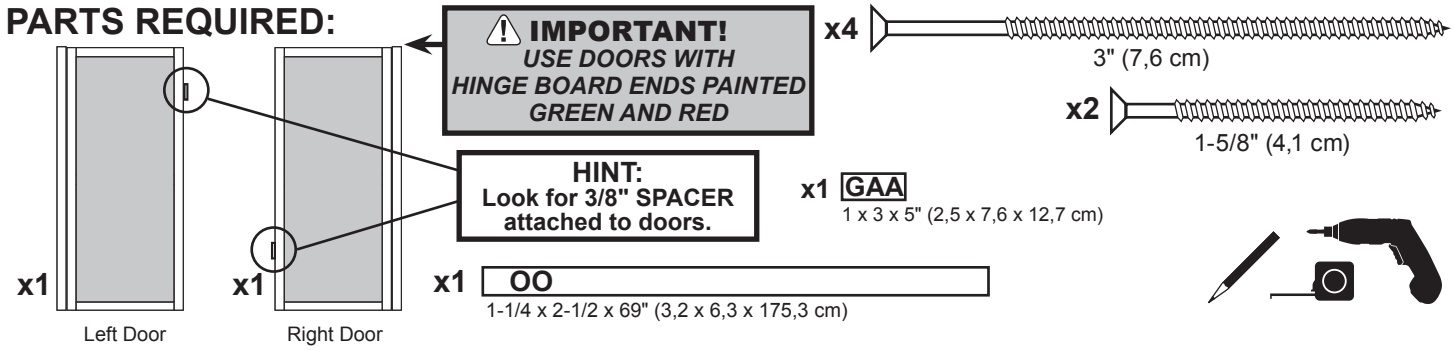

✓BEGIN

1. Orient parts as shown on flat surface. ⚠ **3/8" offset is to top. Look for red (right) and green (left) on hinge board.**
2. Attach temporary support **OO** with 3" screws in middle and at ends as shown. Tighten securely.
3. Attach temporary support **GAA** with two 1-5/8" screws as shown. Tighten securely.

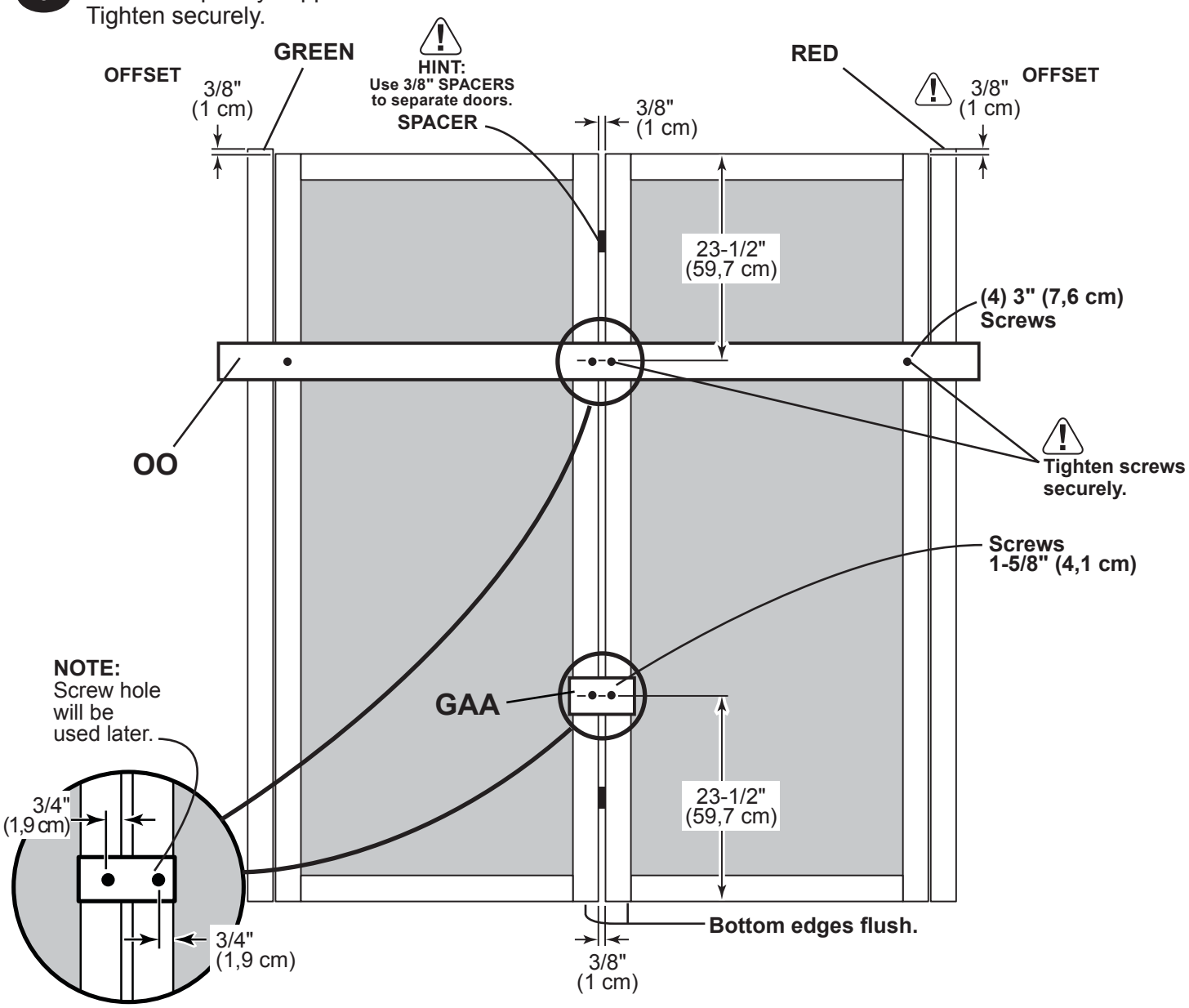

DOUBLE DOORS - GABLE WALL

PARTS REQUIRED:

x12 3" (7,6 cm)

x1 OO
1-1/4 x 2-1/2 x 69" (3,2 x 6,3 x 175,3 cm)

4 Attach temporary support **OO** as a ledger board flush under wall panels for doors to rest on, using two 3" screws **(Fig. A)**.

Center doors on panel seam as shown **(Fig. B)**.

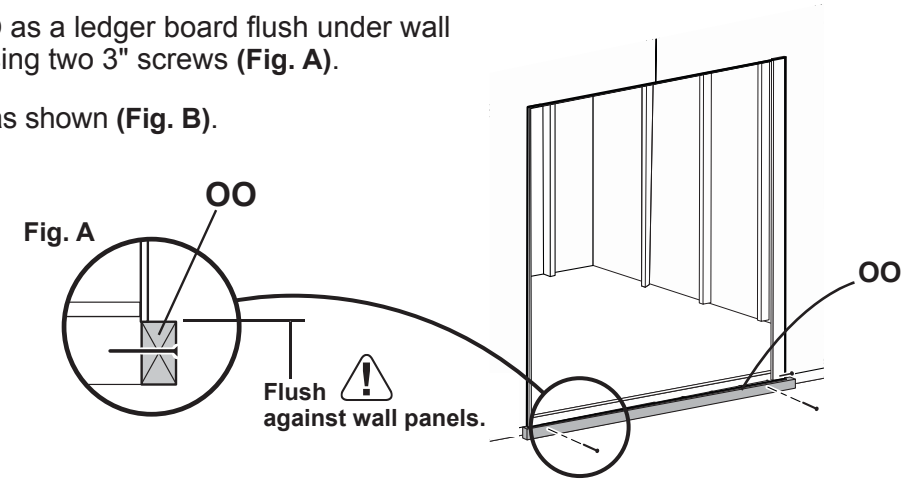

5 Screw hinge boards into wall supports and floor using ten 3" screws as shown.
Make sure screws go into framing and floor (Fig. C, D).

Remove temporary supports and check doors open properly.

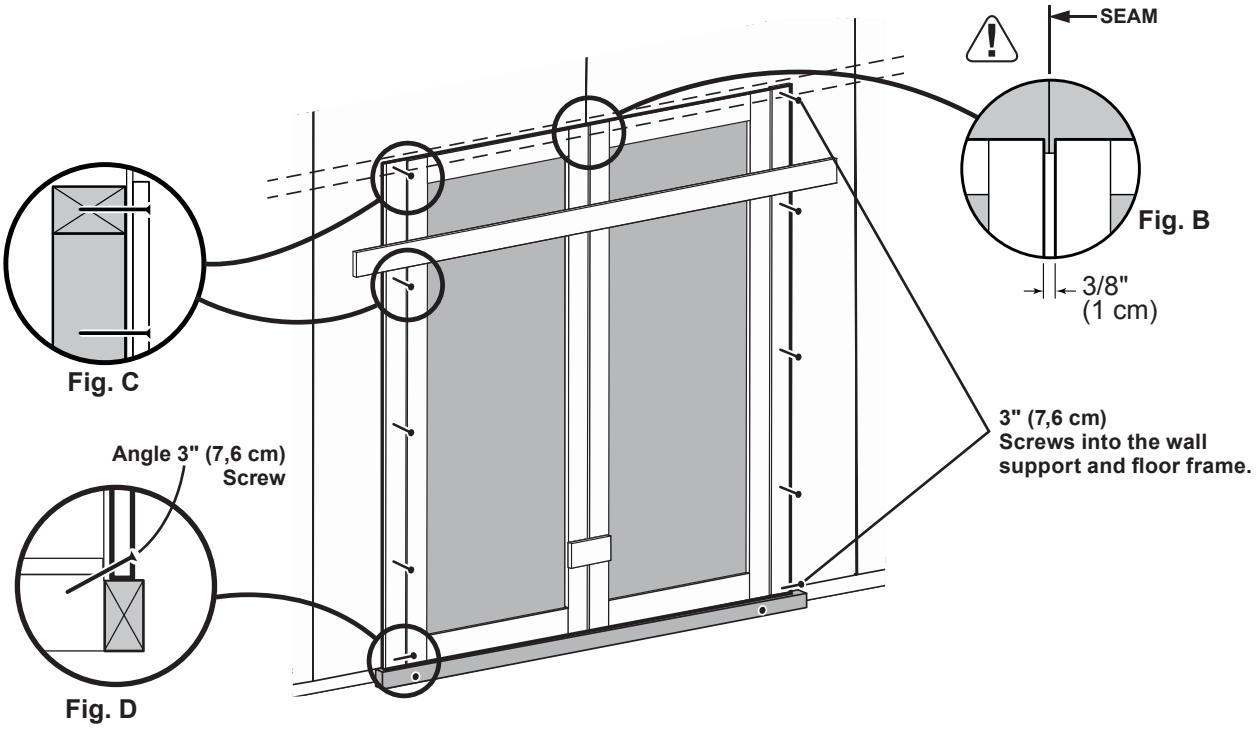

FINISH

You have finished installing your double doors.

DOUBLE DOORS - GABLE WALL

PARTS REQUIRED:

x54 3/4" (1,9 cm)

x1 DGR
19/32 x 2-1/2 x 70-7/8" (1,5 x 6,3 x 180 cm)

x2 DGL
19/32 x 2-1/2 x 70-7/8" (1,5 x 6,3 x 180 cm)

BEGIN

1. Secure door trim from inside using 3/4" screws as shown **(Fig. A)**.

   Attach **DGL** and **DGR** with 3/4" screws from ***inside of doors*** **(Fig. B)**.

2. Reinforce the door trim using 3/4" screws through door panel into trim **(Fig. A)**. Locate screws as shown **(Fig. B)**. Use two screws at seams.

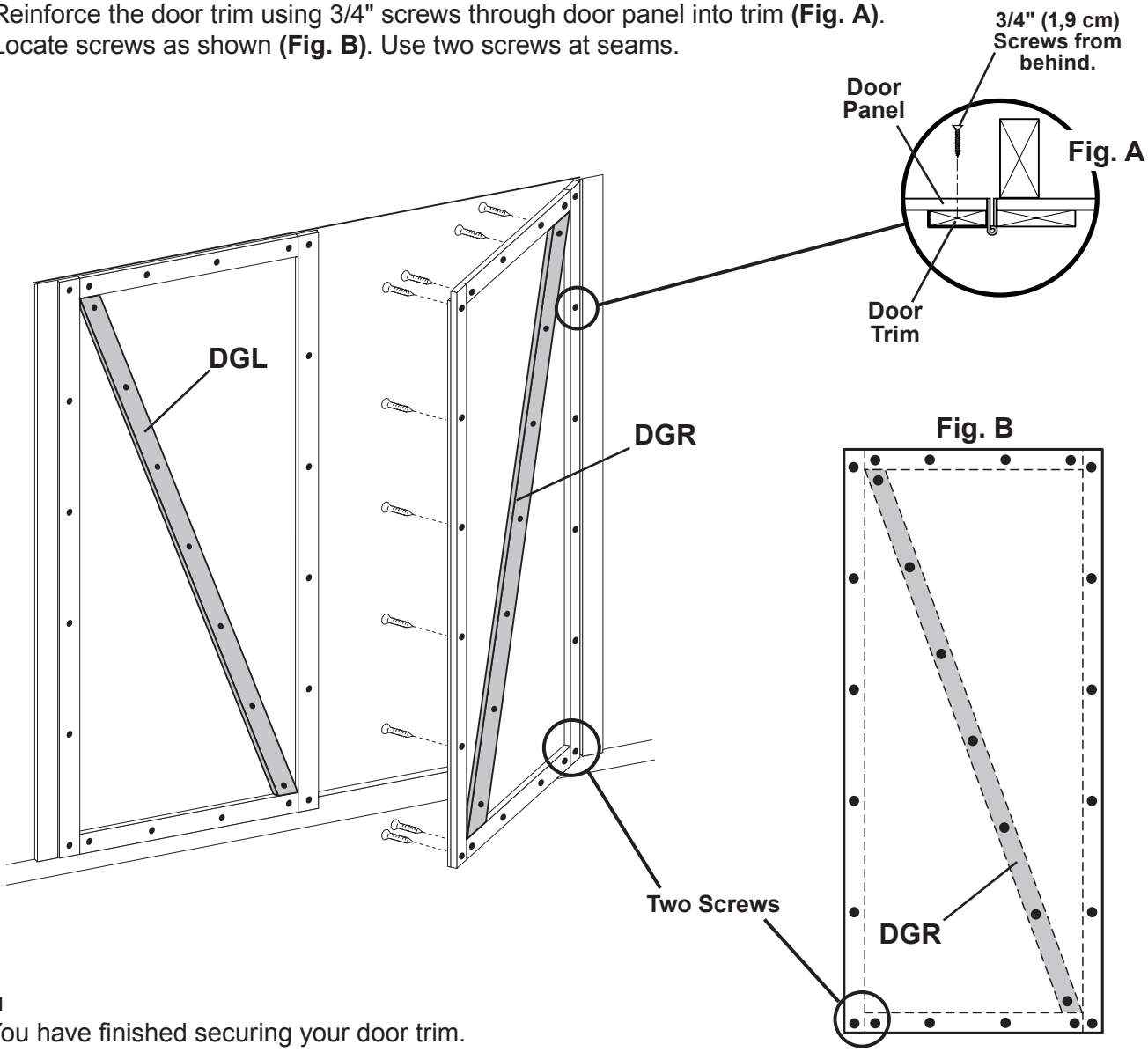

FINISH

You have finished securing your door trim.

DOUBLE DOOR STIFFENERS - GABLE WALL

PARTS REQUIRED:

x12 2" (5,1 cm)

x2 **OO**
1-1/4 x 2-1/2 x 69" (3,2 x 6,3 x 175,3 cm)

BEGIN

1. Center **OO** vertically on the left door in the door opening flush with the edge of door **(Fig. A)**. Secure using (6) 2" screws through outside trim into **OO (Fig. B)**

2. Repeat **Step 1** to install **OO** on right door.

FINISH

You have finished installing your door stiffeners.

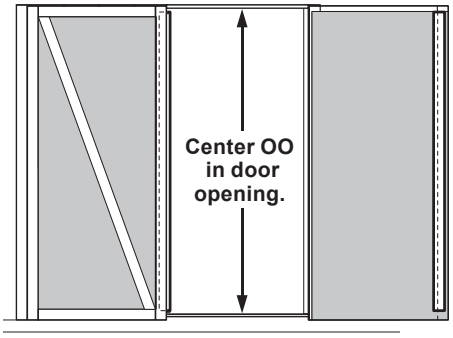

Fig. A

IT IS IMPORTANT TO HOLD THESE DIMENSIONS

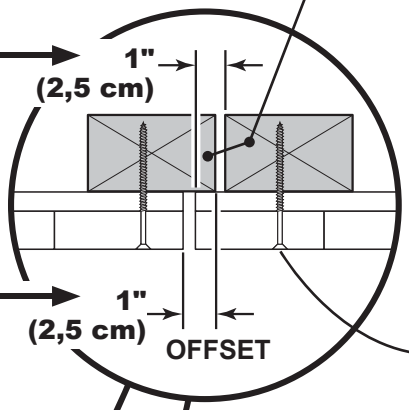

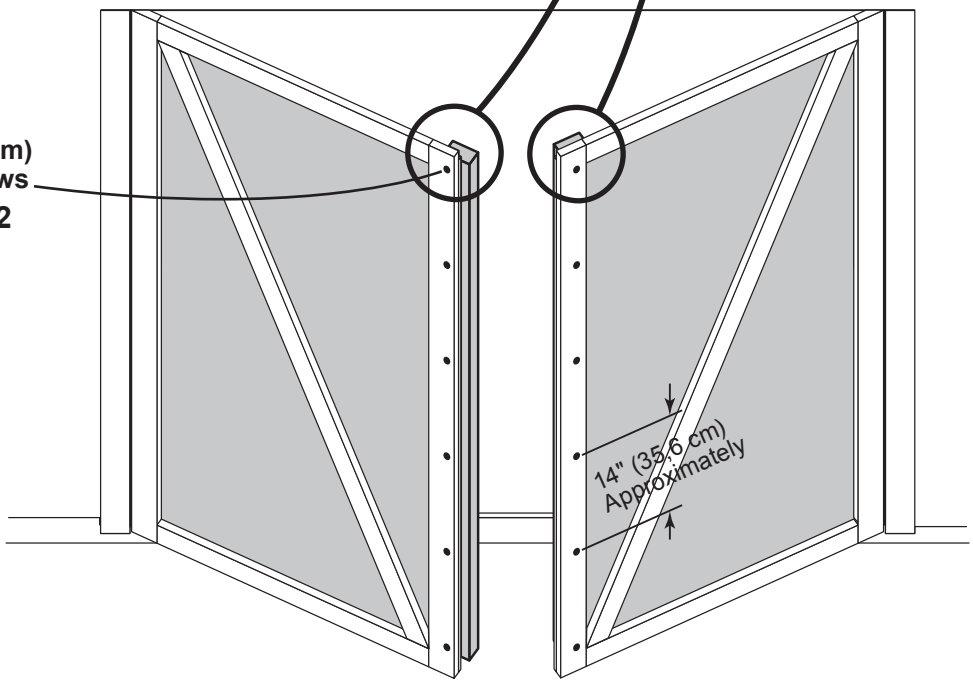

DOUBLE DOOR HARDWARE

PARTS REQUIRED:

BEGIN

1 Measure and mark location of hole on outside of right door as shown **(Fig. A)**.
Pre-drill pilot hole with 1/4" dril.

Pre-drill through hole with 1/2" drill.

Keep drilled hole square to trim to avoid breaking edge of door stiffeners.

Fig. A

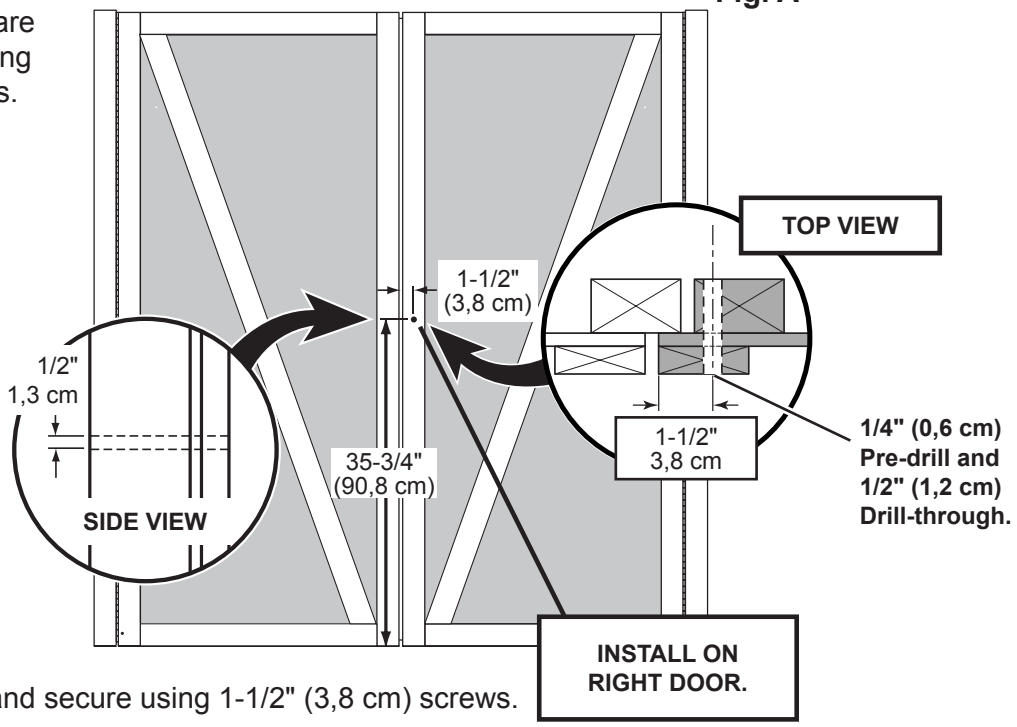

2 Insert handle in hole and secure using 1-1/2" (3,8 cm) screws.

Attach inside handle and secure with set screw as shown.

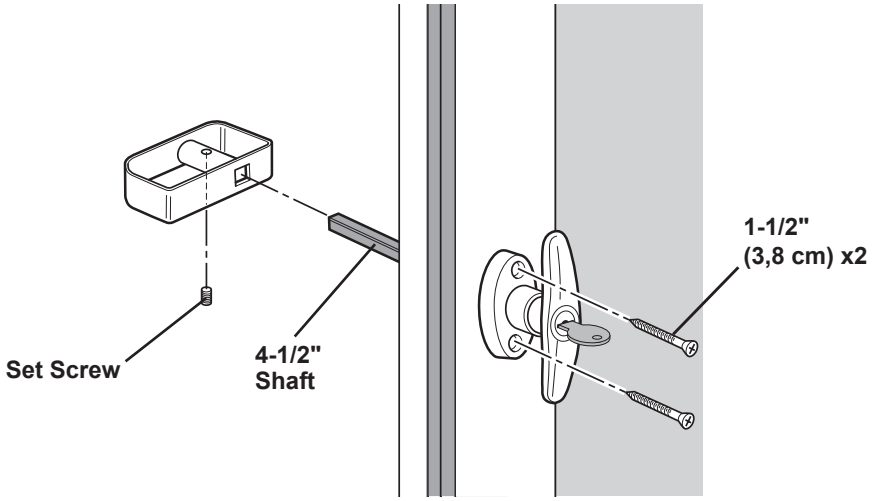

FINISH

You have finished installing your T-handle.

DOUBLE DOOR HARDWARE

PARTS REQUIRED:

x2

x8

1" (2,5 cm)

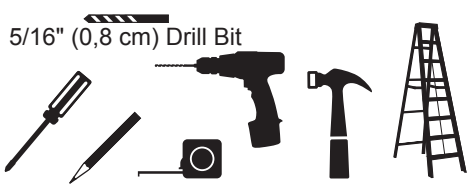

BEGIN

1. Place top bolt onto **OO** in open position with bolt ends 3/8" (1 cm) down from frame. Bolt is open when loop is contacting base **(Fig A)**.

   Mark and pre-drill holes for screws.

2. Install bolt with screws supplied and drill 5/16" (0,8 cm) hole deep enough for bolt to slide into.

3. Place bottom bolt onto **OO** in open position with bolt ends 1/2" (1,3 cm) up from floor. Bolt is open when loop is contacting base **(Fig B)**.

   Mark and pre-drill holes for screws.

4. Install bolt with screws supplied and drill 5/16" (0,8 cm) hole deep enough for bolt to slide into.

HINT: With door closed extend bolt and tap with hammer to leave a mark in wood for drilling.

FINISH

You have finished installing your Spring-Bolts.

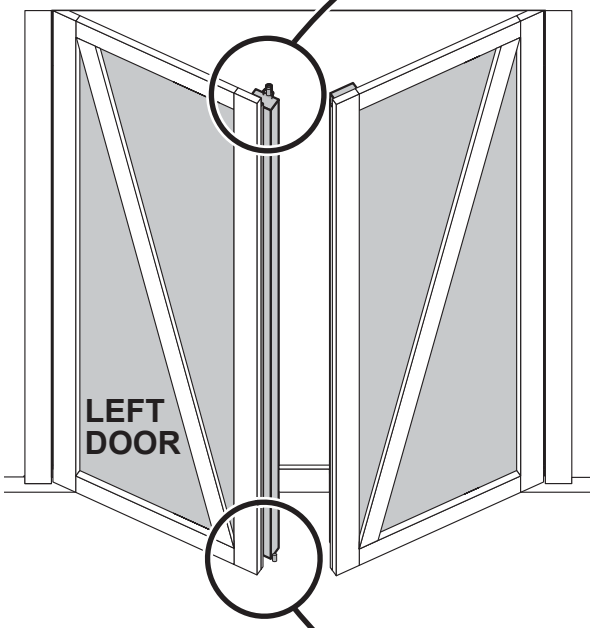

Fig. A

LOCATE AND PRE-DRILL HOLES TO AVOID SPLITTING WOOD

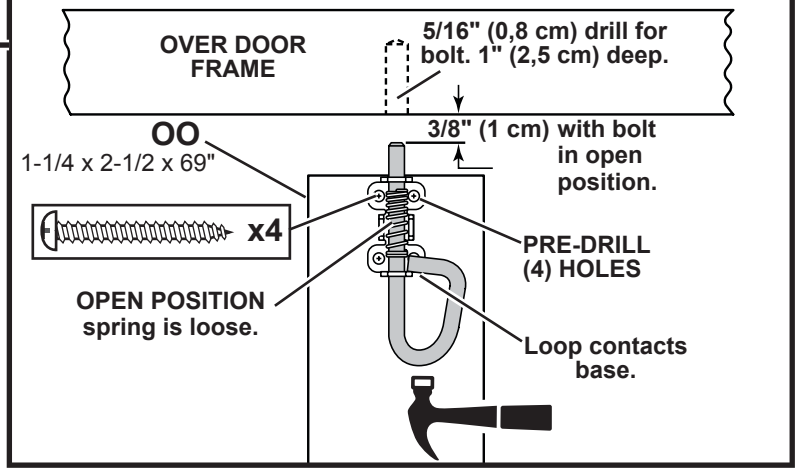

Fig. B

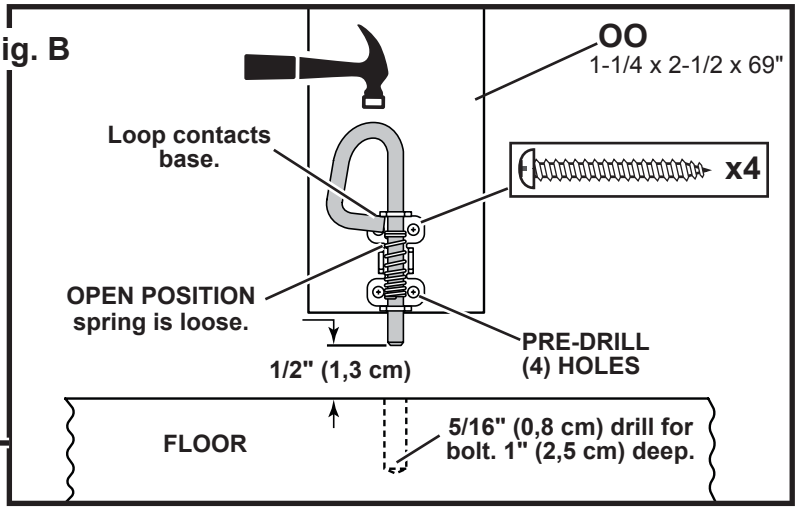

SINGLE DOOR - FRONT WALL

PARTS REQUIRED:

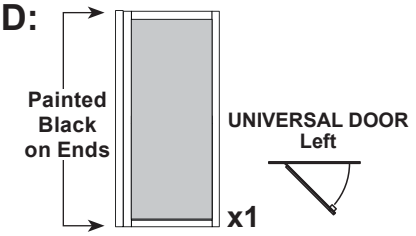

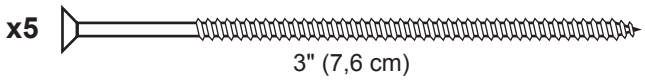

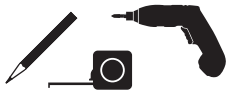

Refer to Page 20 for right hand swing single door note.

✓BEGIN

1 Install single door with black-painted hinge board.

Center door in wall panel opening.
Hold door in position and keep level.

2 Measure Gap **(Fig. B)** between door trim and wall panel as shown.
Hold door in position and keep level.
⚠ ***Hinge-board must overhang wall panel at measurement shown*** **(Fig. C)**.
Bottom of door trim is even with wall panel as shown.

3 Screw hinge board into wall supports and floor using five 3" screws as shown.
⚠ **Make sure screws go into framing and floor (Fig. D, Fig. E)**.

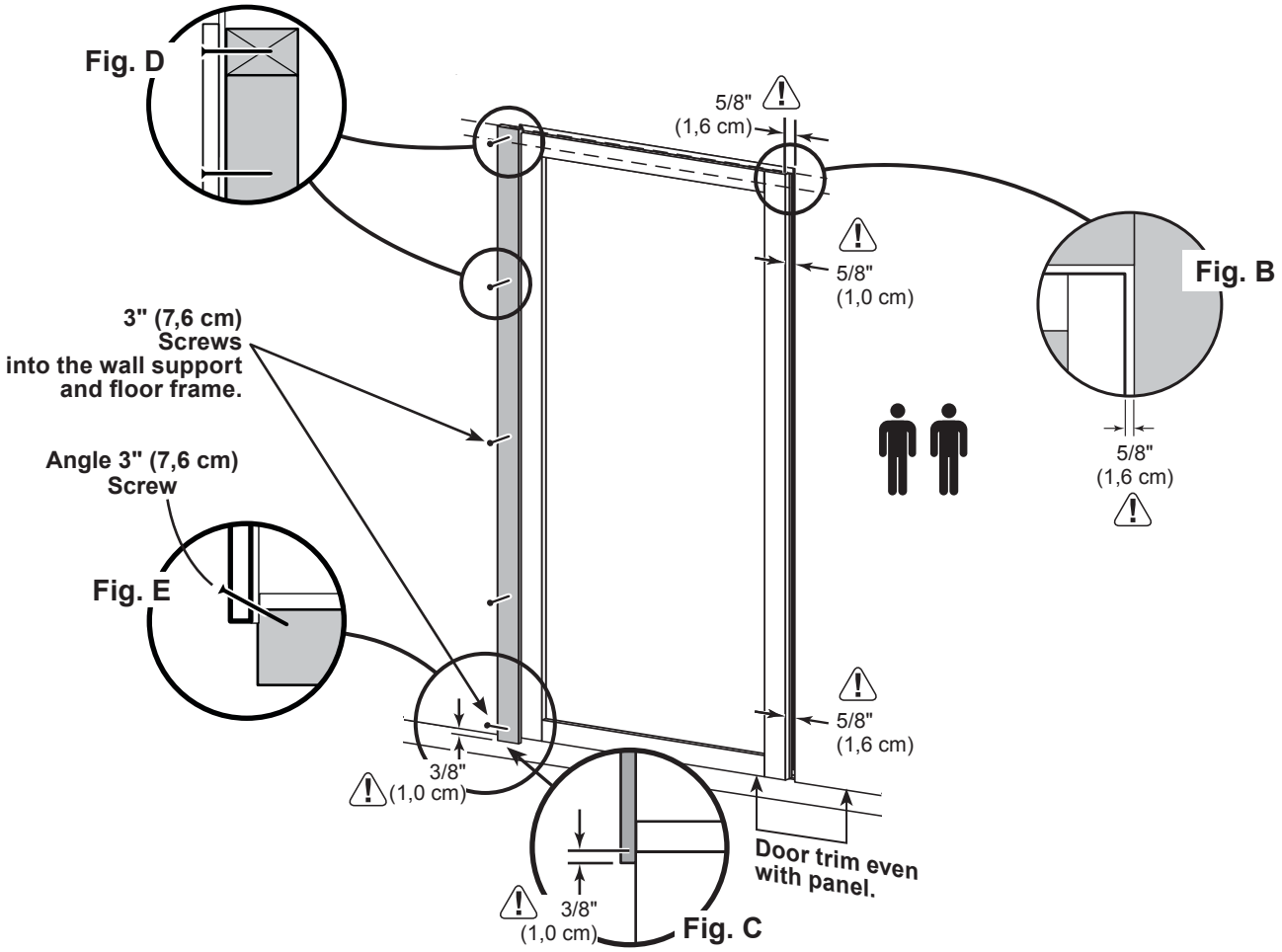

FINISH

You have finished installing your single door.

SINGLE DOOR TRIM - FRONT WALL

PARTS REQUIRED:

x1 **DGL**
19/32 x 2-1/2 x 70-7/8" (1,5 x 6,3 x 180 cm)

x27 3/4" (1,9 cm)

✓ **BEGIN**

1 Secure door trim from inside using 3/4" screws as shown **(Fig. A)**.

2 Attach **DGL** with 3/4" screws from inside of door. **(Fig. B)**.

3 Reinforce the door trim using 3/4" screws through door panel into trim **(Fig. A)**.
Locate screws as shown in **Fig. B**. Use two screws at seams.

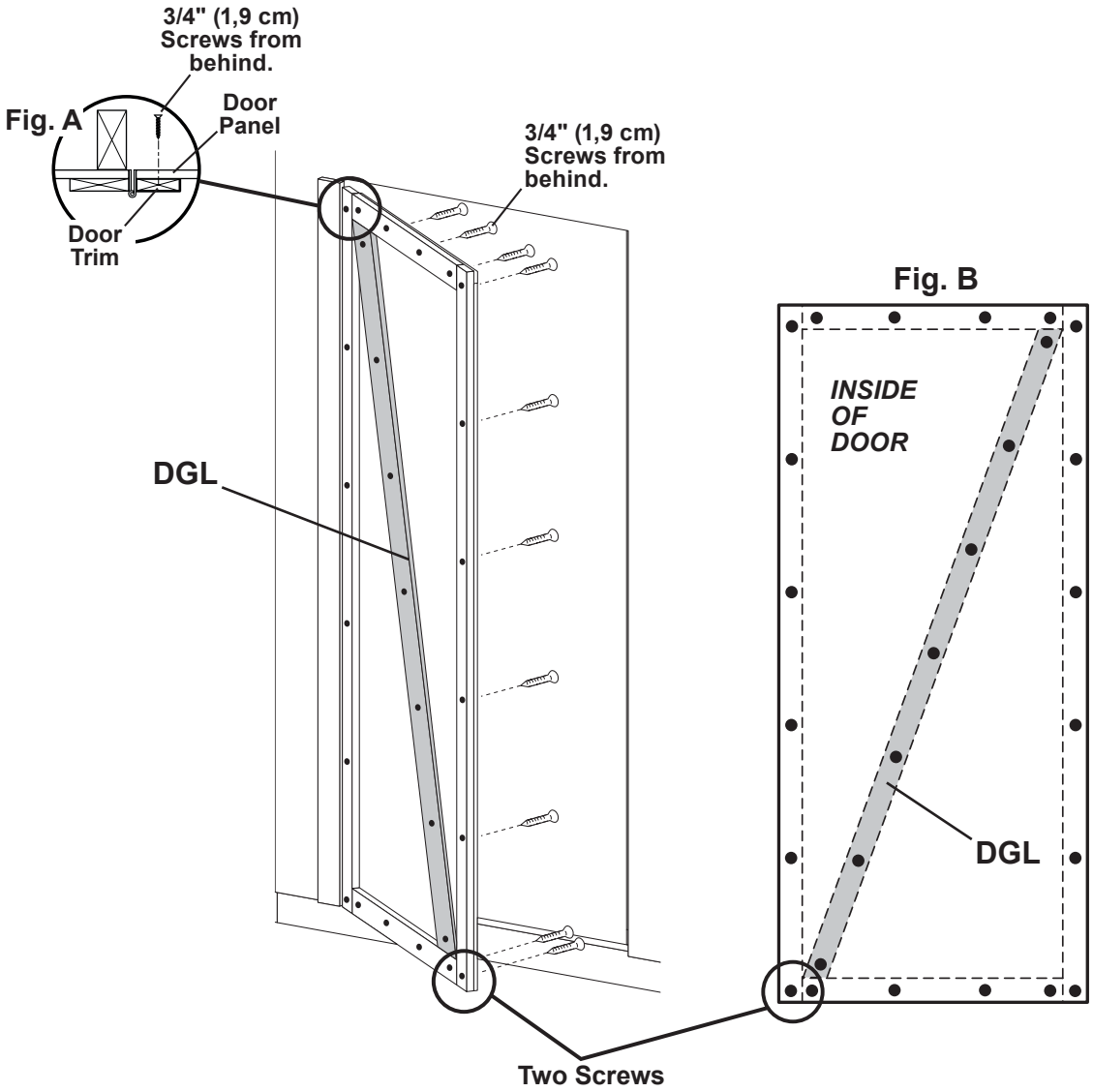

FINISH

You have finished securing your door trim.

DOOR STIFFENER & WEATHER STRIP - FRONT WALL

PARTS REQUIRED:

x1 **OO**
1-1/4 x 2-1/2 x 69" (3,2 x 6,3 x 175,3 cm)

x2 **LRA**
1 x 4 x 69-3/4" (2,5 x 10,2 x 177,2 cm)

x20 2" (5,1 cm)

x6 2" (5,1 cm)

✓BEGIN

1 Center **OO** vertically on door in the door opening **(Fig. A)** 1" from edge of door **(Fig. B)**.
Secure using (6) 2" screws through outside trim into **OO (Fig. B)**

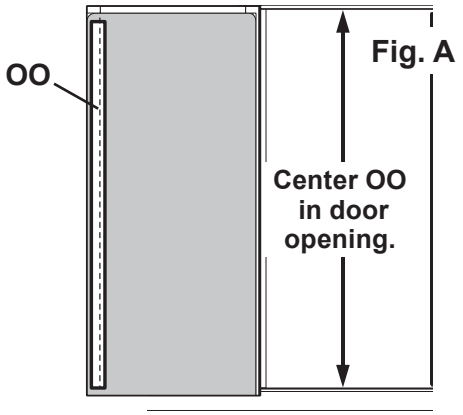

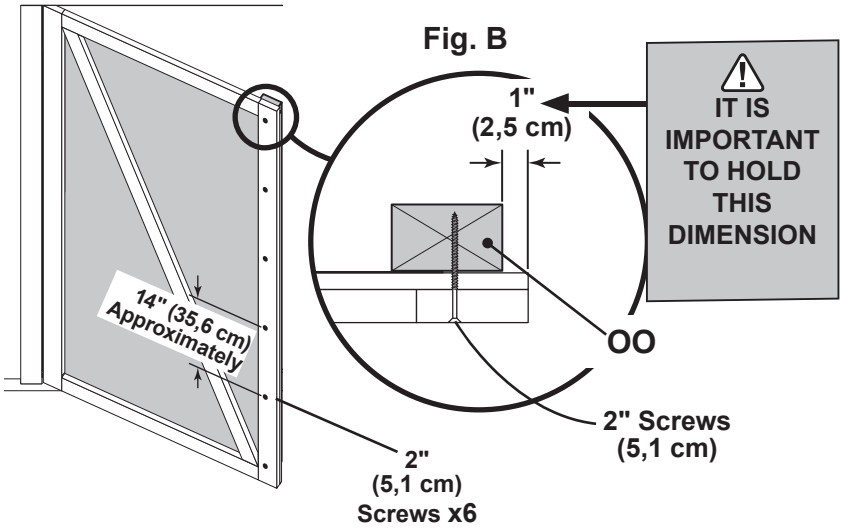

2 Hold **LRA** tight against inside of door **(Fig. D)**.
Secure **LRA** using 2" finish nails into right door frame as shown.

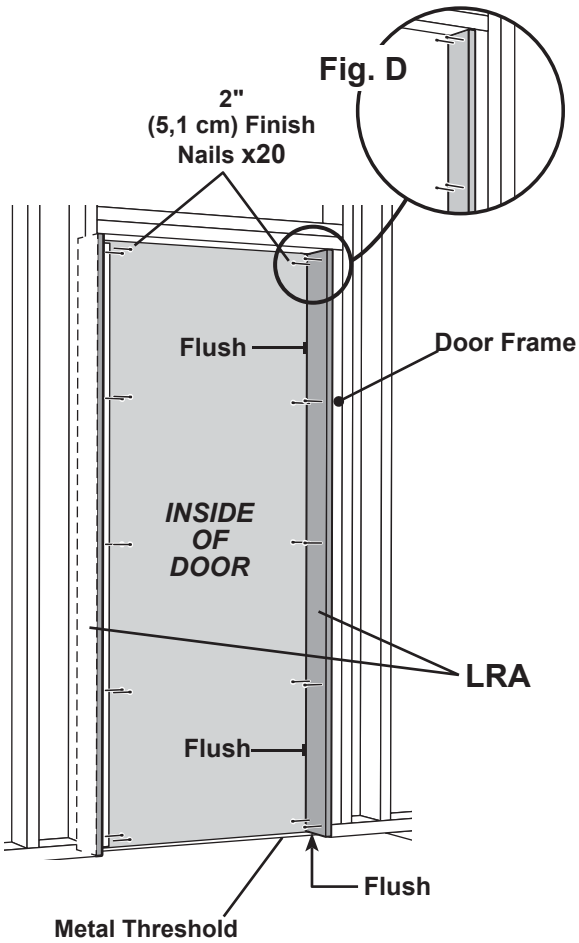

3 Repeat **Step 2** to install **LRA** on other side of door opening.

FINISH

You have finished installing your weatherstrip and threshold.

DOOR HARDWARE - SINGLE DOOR

PARTS REQUIRED:

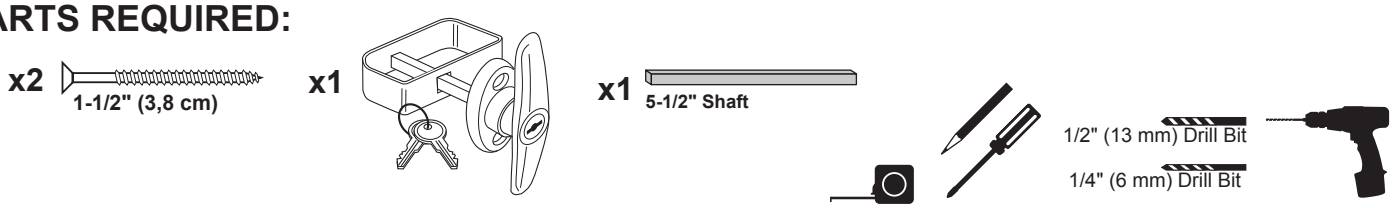

BEGIN

1 Measure and mark location of hole on outside of door as shown **(Fig.A).**
Pre-drill pilot hole with 1/4" dril.

Pre-drill through hole with 1/2" drill.

Keep drilled hole square to trim to avoid breaking edge of door stiffener.

Fig. A

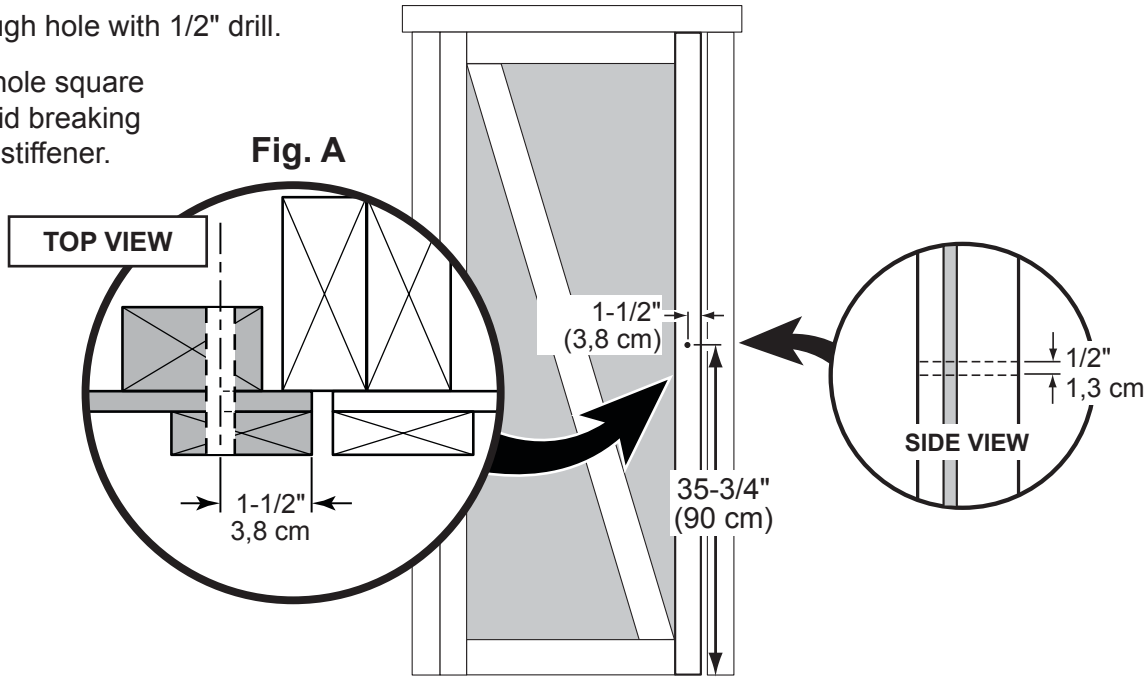

2 Insert handle in hole and secure using 1-1/2" (3,8 cm) screws **(Fig. B)**.
Attach inside handle and secure with set screw as shown.

Fig. B

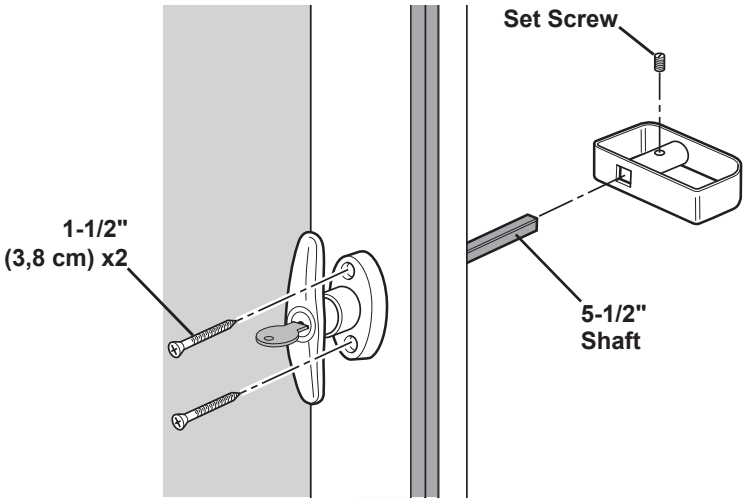

FINISH

You have finished installing your T-handle.

CORNER TRIM

PARTS REQUIRED:

x8 3/8 x 1-3/4 x 81-1/2" (1 x 4,4 x 207 cm)

x48 2" (5,1 cm)

✓ BEGIN

1 Attach one **81-1/2"** trim board flush under soffit panel and against eave wall **(Fig. A, B)** using one 2" finish nail at top as shown.

2 Position **81-1/2"** trim board flush along edge of installed **81-1/2"** trim board and flush under gable panel **(Fig. A, B)**. Secure using one 2" finish nail at top as shown.

Finish attaching trim flush to corners **(Fig. B)** using (6) 2" (5,1 cm) finish nails as shown.

3 Repeat **Steps 1 - 2** to attach trim to all four corners.

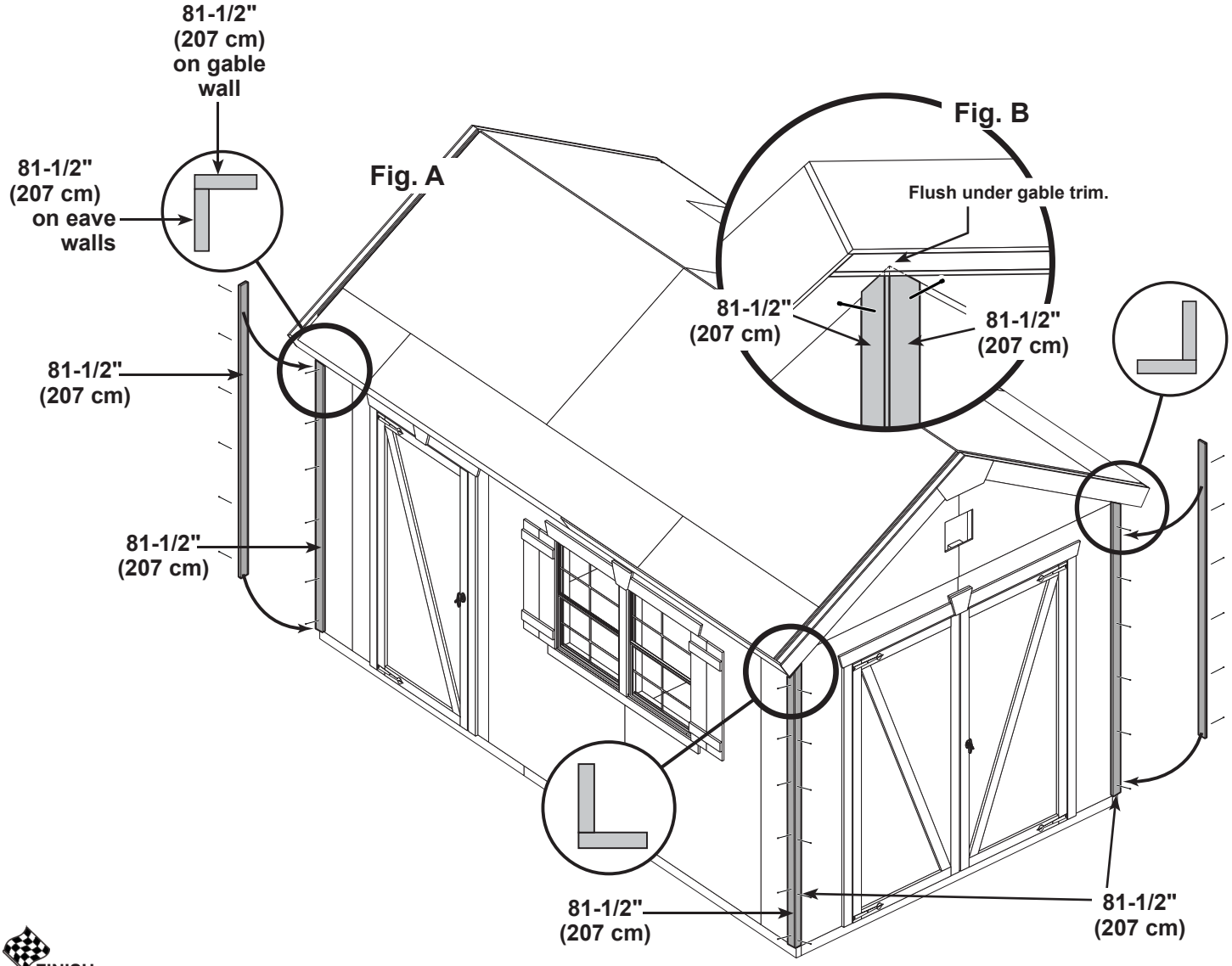

FINISH

You have attached your corner trim.

COLLAR TIES

PARTS REQUIRED:

x2 JF

1 x 4 x 60" (2,5 x 10,2 x 152,4 cm)

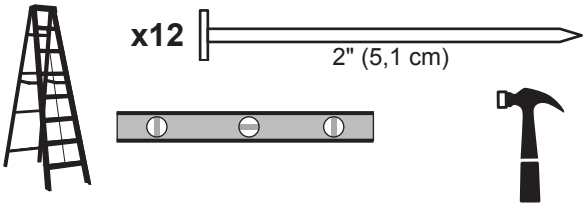

BEGIN

1 Position and level collar ties **JF** on 3rd and 5th rafters from double door wall.

HINT: For best appearance install collar ties on rafters facing away from double door opening.

2 Attach with 2" nails as shown.

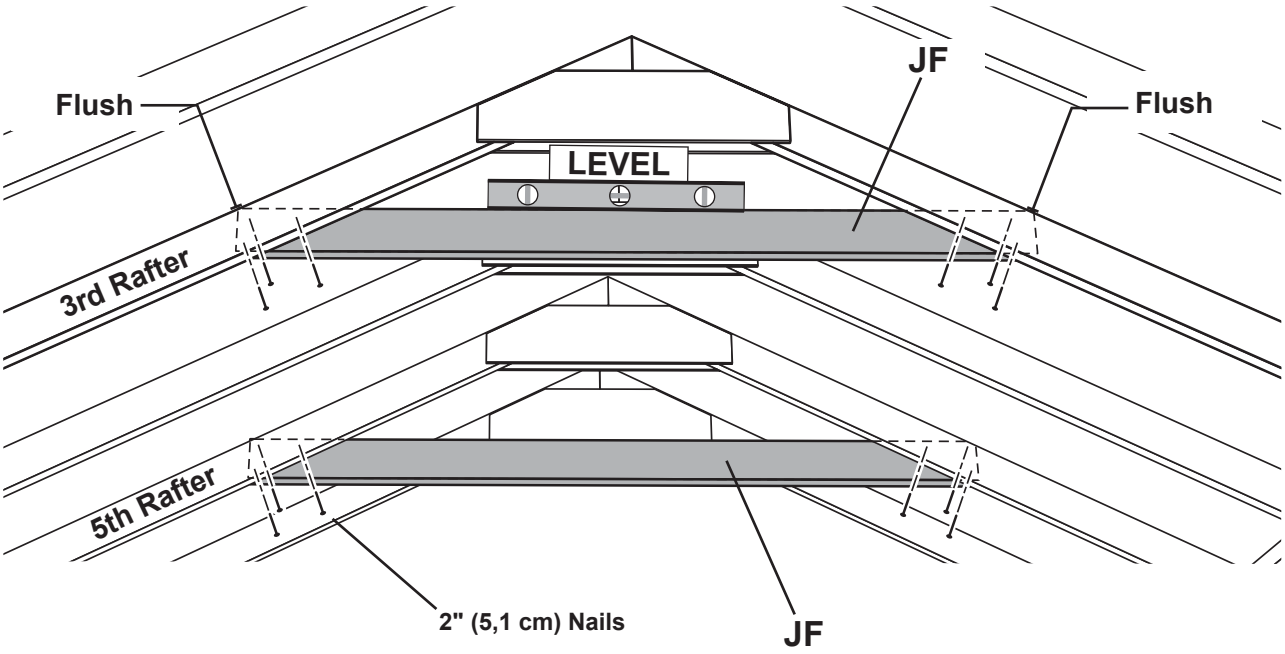

FINISH

You have finished installing your collar tie.

WINDOWS

PARTS REQUIRED: **x2** 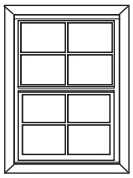

Window
22-1/4 x 29-3/4"
(56,5 x 75,6 cm)

x8 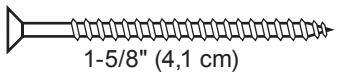
1-5/8" (4,1 cm)

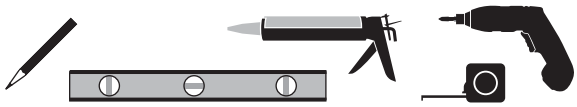

BEGIN

1. Seal windows with high-quality exterior-grade caulk before installing **(Fig. A)**.

2. Center and secure windows using 1-5/8" screws as shown. Ensure window is level.

Fig. A

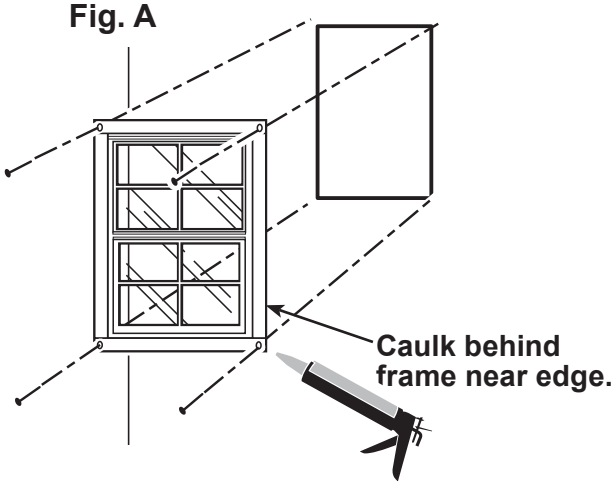

Fig. B

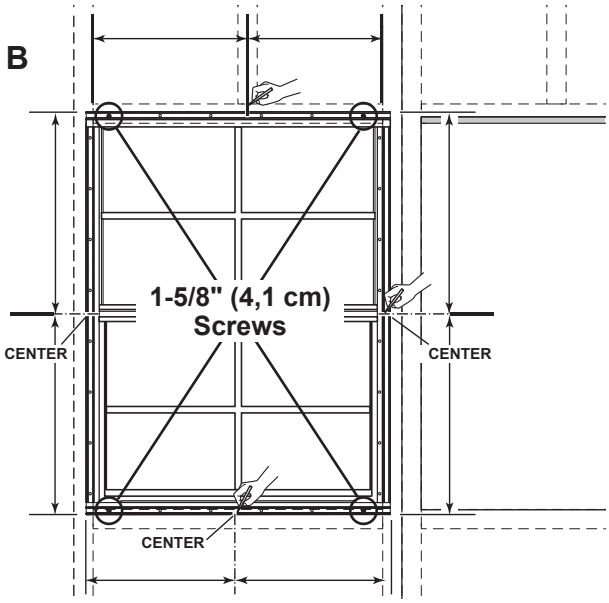

FINISH

You have finished installing your windows.

SHUTTERS & WINDOW TRIM

PARTS REQUIRED:

x4 DJA
19/32 x 2-1/2 x 11" (1,5 x 6,3 x 27,9 cm)

x20 1" (2,5 cm)

x14 2" (5 cm)

x4 DHA
19/32 x 5-1/2 x 30-1/8" (1,5 x 14 x 76,5 cm)

x4 AZ
19/32 x 2-1/2 x 30-1/8" (1,5 x 6,3 x 76,5 cm)

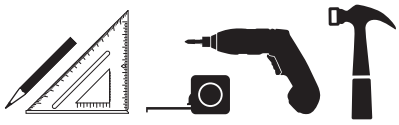

✓BEGIN

1 Position **DHA** on top of **DJA** primed side down as shown. Square and mark.
Attach **DHA** using 1" screws.

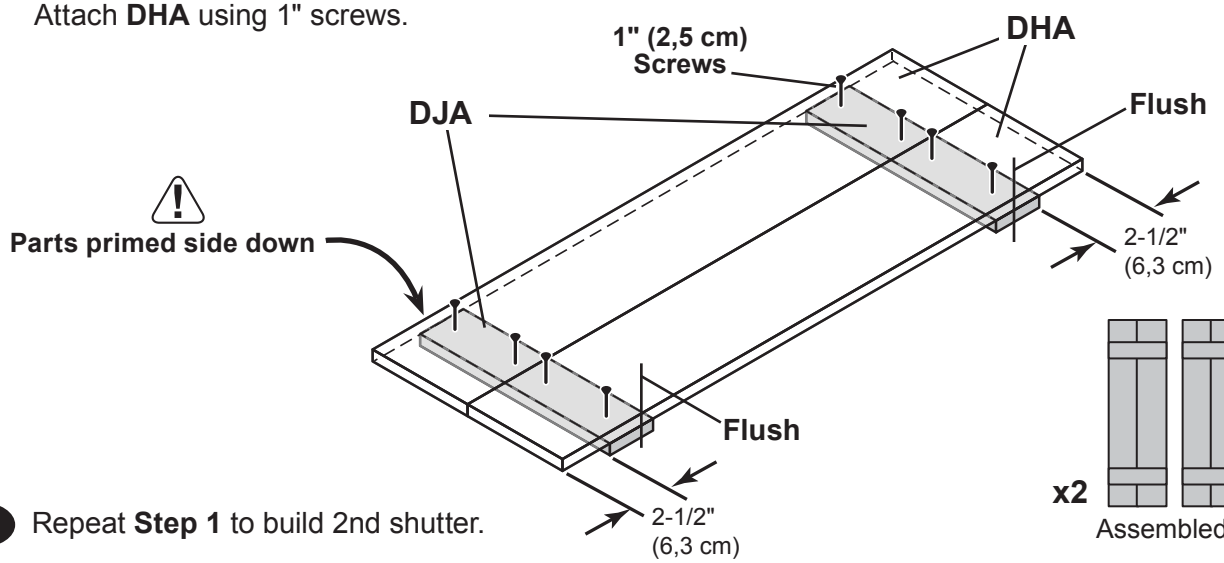

2 Repeat **Step 1** to build 2nd shutter.

3 Locate shutter just past the inside of the vertical screw holes on window flange.
Center shutter from top to bottom of window as shown.
Attach shutter using 2" finish nails indicated at "dot". Nail into wall studs.
From inside, attach shutter using 1" screws indicated at "X".
Repeat steps to attach shutter on opposite side.

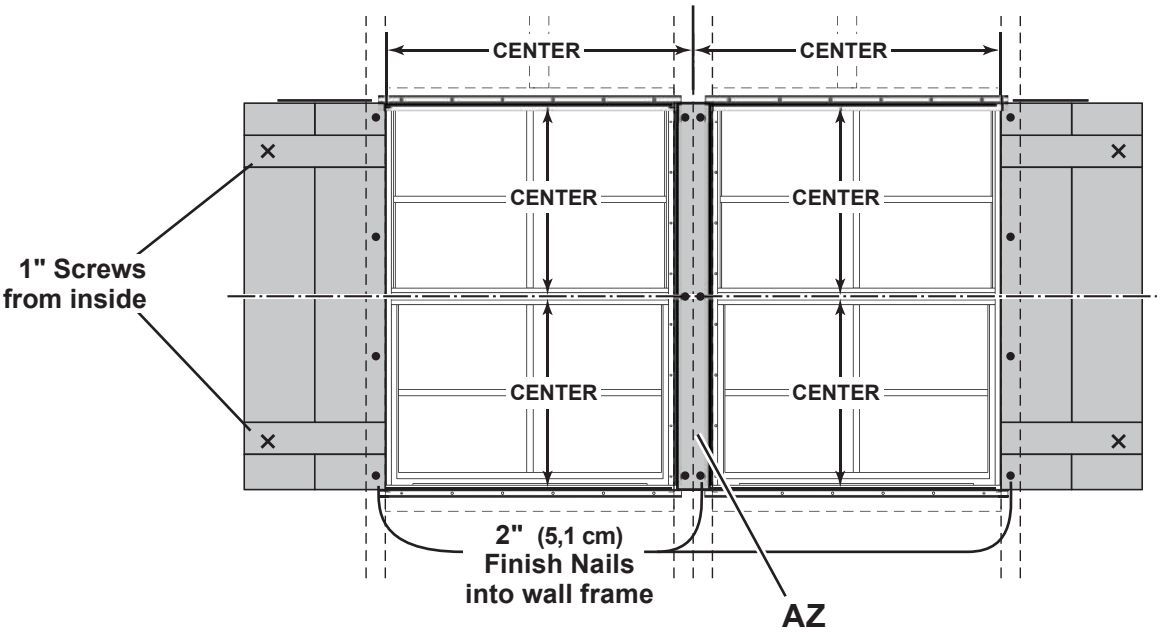

4 Locate **AZ** centered on marks and seam as shown. Attach using 2" finish nails.
Nail into double studs.

WINDOW TRIM (cont.)

PARTS REQUIRED:

x17 2" (5 cm)

x1 NRA 19/32 x 6-7/16 x 5-1/2" (1,5 x 17,5 x 14 cm)

x1 JTA 19/32 x 6-7/16 x 2" (1,5 x 16,4 x 5,1 cm)

x1 DEA 2 x 3-1/2 x 55" (5,1 x 8,9 x 139,7 cm)

x1 AUA 2 x 2-1/2 x 53" (5,1 x 6,3 x 134,6 cm)

5 Locate **DEA and AUA** centered and flush to shutters as shown.
Attach using 2" finish nails. Nail into framing.

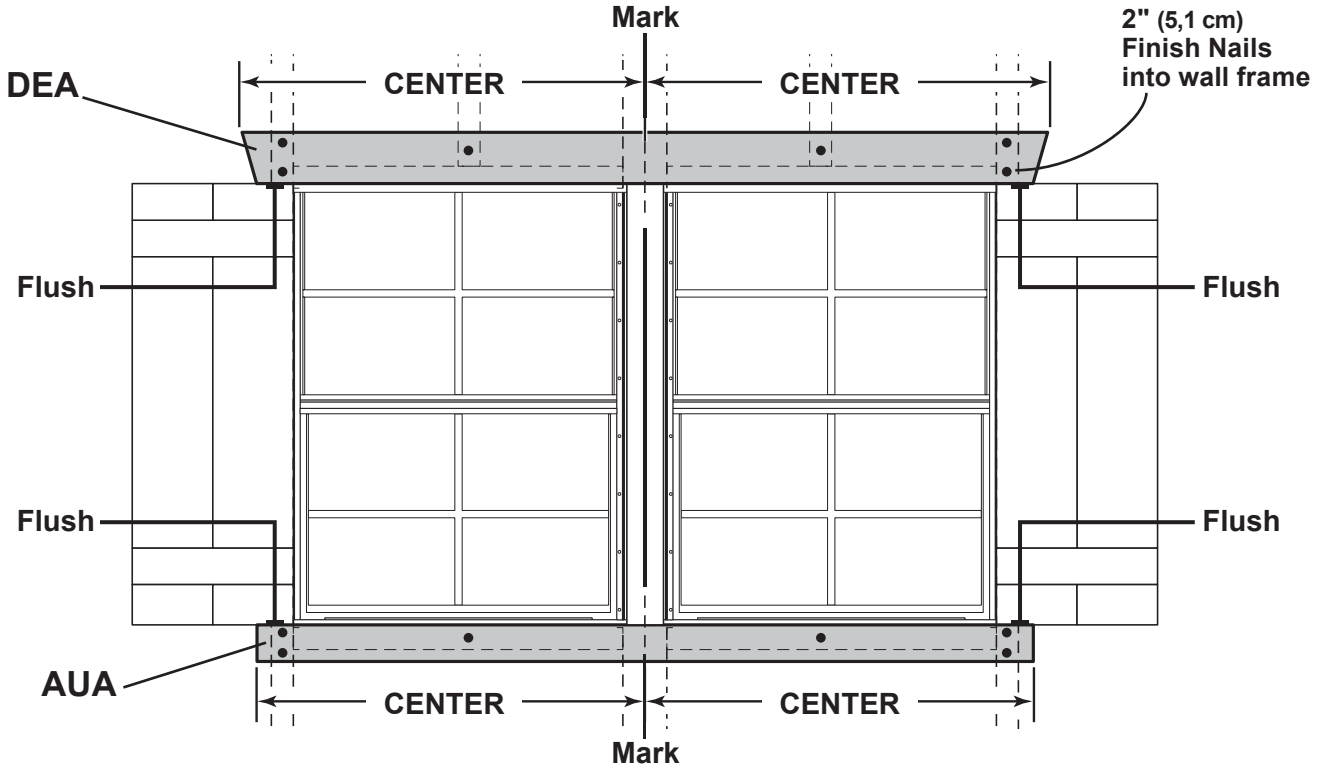

6 Locate **JTA** centered over trim.
Attach using one 2" finish nail as shown.
Nail into framing.

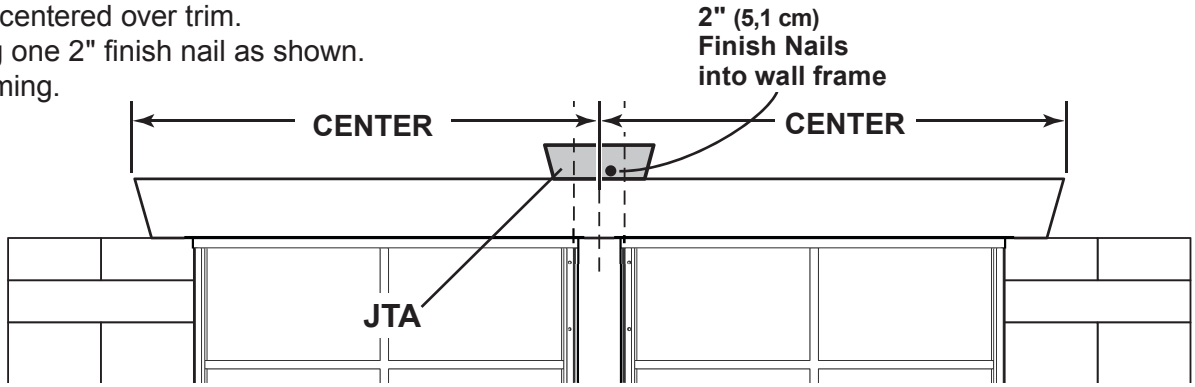

7 Place **NRA** keystone centered over **JTA**.
Attach using four 2" finish nails as shown. Nail into framing.

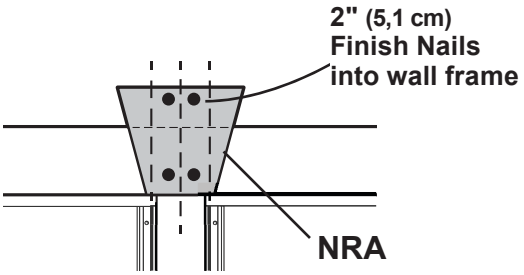

FINISH

You have finished installing your shutters and window trim.

DOOR TRIM

PARTS REQUIRED:

x10 2" (5 cm)

x2 NRA 19/32 x 6-7/16 x 5-1/2" (1,5 x 17,5 x 14 cm)

x1 JTA 19/32 x 6-7/16 x 2" (1,5 x 16,4 x 5,1 cm)

x1 DDA 19/32 x 3-1/2 x 40" (1,5 x 8,9 x 101,6 cm)

x1 DFA 19/32 x 3-1/2 x 72" (1,5 x 8,9 x 182,9 cm)

x1 ZJ 19/32 x 2-1/2 x 72" (3,2 x 6,3 x 182,9 cm)

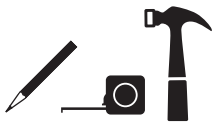

BEGIN

1 Center trim **DFA** over double doors flush to hinge boards.
Secure using 2" finish nails into framing as shown **(Fig. A)**.

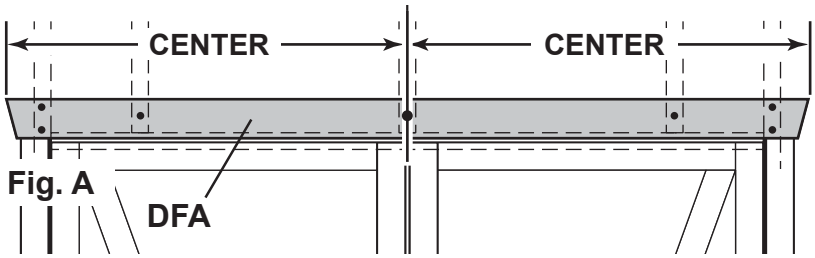

Fig. A

2 Locate **JTA** centered over trim **(Fig. B)**.
Attach using one 2" finish nail, close to trim as shown.
Nail into framing.

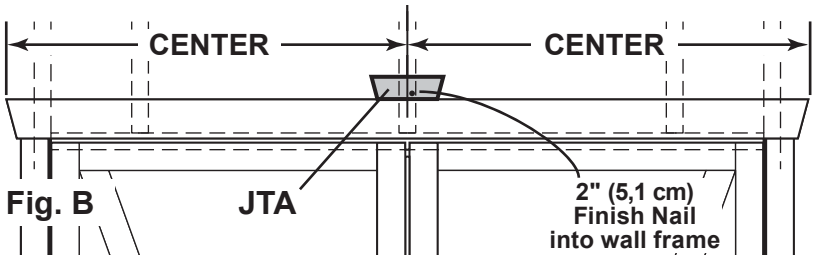

Fig. B

3 Place **NRA** centered over **JTA (Fig. C)**.

Attach using four 2" finish nails as shown.

Nail into framing and top trim.

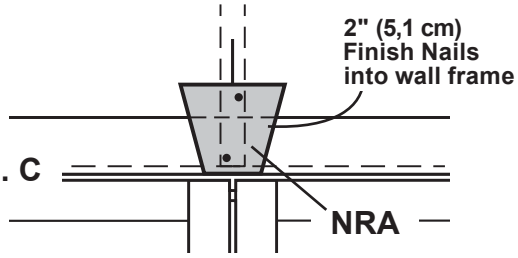

Fig. C

FINISH

You have finished installing your double door trim.

DOOR TRIM

PARTS REQUIRED:

x19 2" (5 cm)

x1 NRA 19/32 x 6-7/16 x 5-1/2" (1,5 x 17,5 x 14 cm)

x1 JTA 19/32 x 6-7/16 x 2" (1,5 x 16,4 x 5,1 cm)

x1 DDA 19/32 x 3-1/2 x 40" (1,5 x 8,9 x 101,6 cm)

x1 ZJ 19/32 x 2-1/2 x 72" (3,2 x 6,3 x 182,9 cm)

BEGIN

1. Flush **ZJ** with bottom of wall panel and single door **(Fig. D)**.
   Ensure 3/8" gap between door and trim **(Fig. D)**.

   Secure using 2" finish nails into framing as shown.

2. Center trim **DDA** over door flush to hinge board and **ZJ**.
   Secure using 2" finish nails into framing as shown **(Fig. D)**.

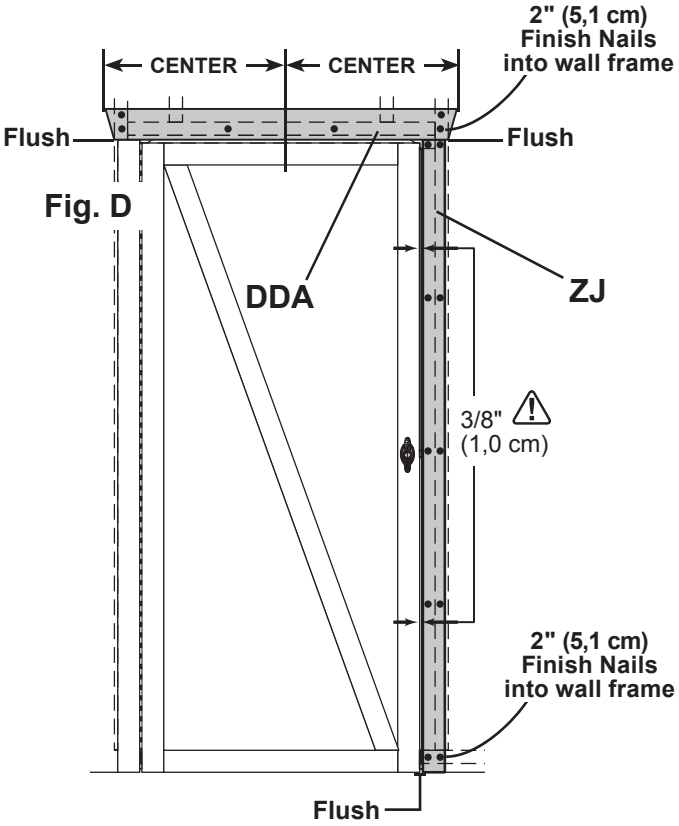

Fig. D

3. Locate **JTA** centered over door trim.
   Attach using one 2" finish nail close to trim as shown **(Fig. E)**.

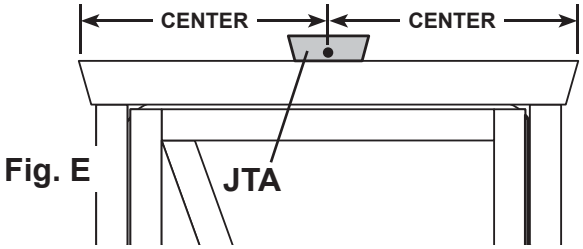

Fig. E

4. Place **NRA** centered over **JTA**.
   Attach using five 2" finish nails as shown **(Fig. F)**.
   Nail into **JTA** and framing at bottom.

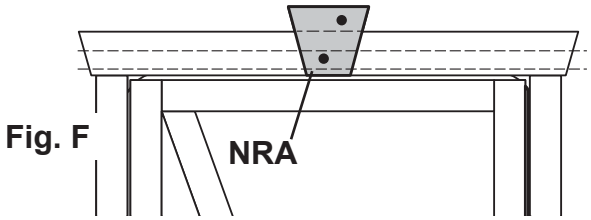

Fig. F

FINISH

You have finished installing your single door trim.

DOOR - DECORATIVE HINGES

PARTS REQUIRED:

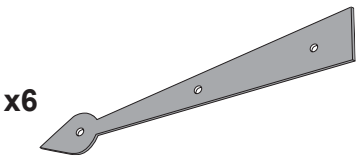

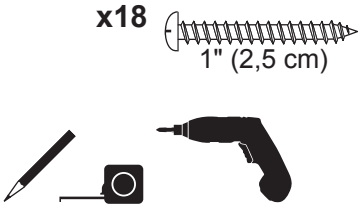

BEGIN

1 Level decorative hinges in position as shown.
Secure with 1" (2,5 cm) screws.

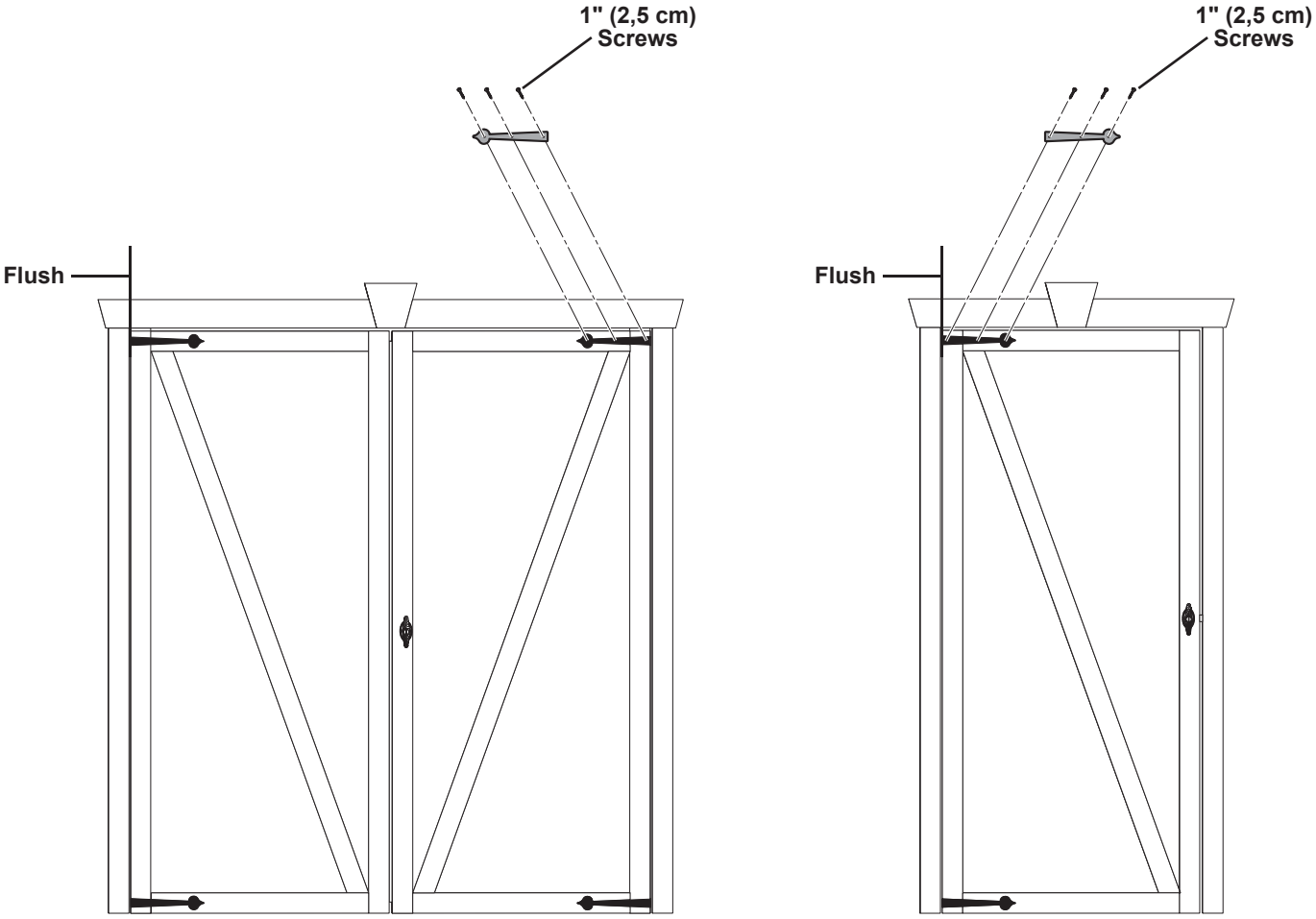

FINISH

You have finished installing your decorative door hinges.

GABLE VENTS

PARTS REQUIRED:

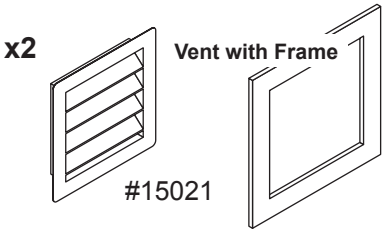

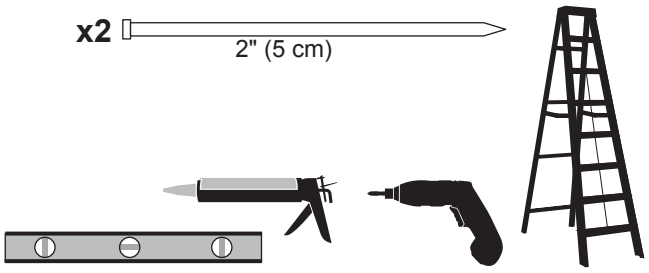

BEGIN

1 Place vent in gable opening. Seal vent behind vent flange edges with high-quality exterior-grade caulk before installing **(Fig. A)**.

Fig. A

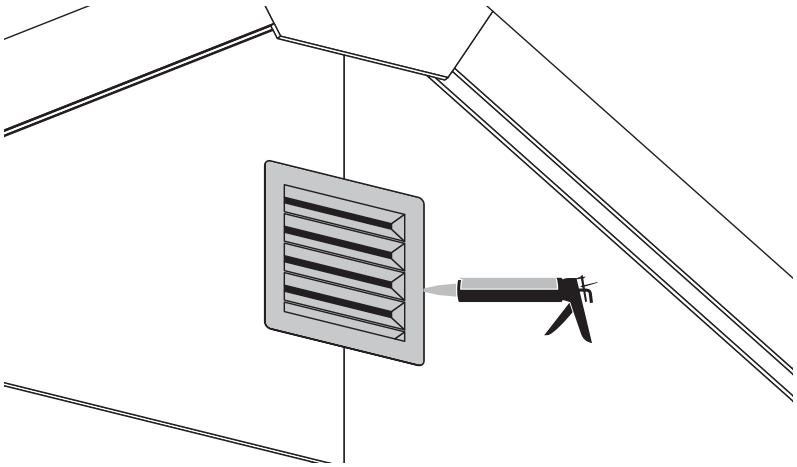

2 Center vent frame over vent. Ensure frame is level.
Seal vent trim from behind with high-quality exterior-grade caulk before installing **(Fig. B)**.

Fig. B

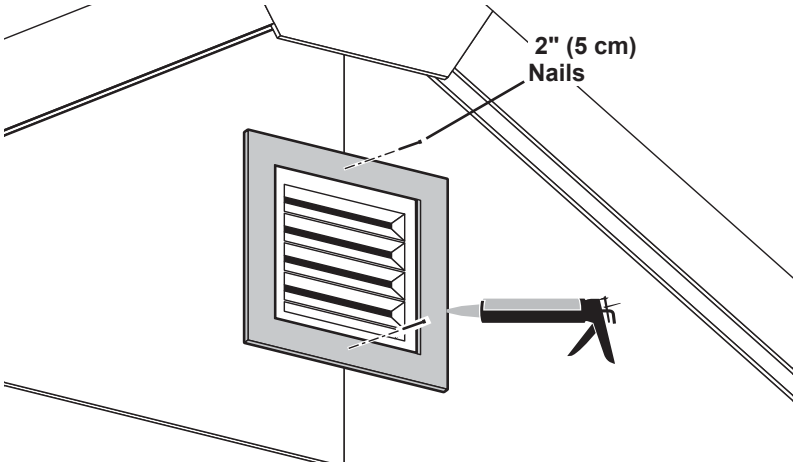

3 Secure vent frame using 2" finish nails **(Fig. B)**.

4 Repeat **Steps 1-3** to install vent and frame on the other gable wall.

FINISH

You have finished installing your vents.

PAINT & CAULK
- NOT INCLUDED -

- Use acrylic latex caulk that is paintable. Caulk at all horizontal and vertical seams, between the trim and walls, and all around the door trim.

- Use a high quality exterior acrylic latex paint. When painting your building, there are a few key areas that can be easily overlooked that must be painted:
  - Bottom edge of all siding and trim
  - Inside of doors and all 4 edges

Note:
Prime all un-primed exterior wood before painting.
(Follow directions provided by manufacturer.)

ROOF FELT
- NOT INCLUDED -

- Install felt flush to all roof edges overlapping 3". Use minimal amount of roofing nails to hold in place.

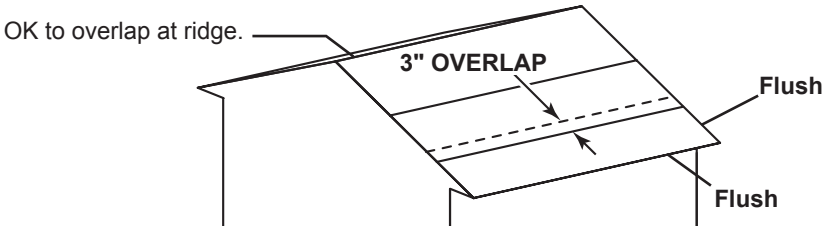

DRIP EDGE
- NOT INCLUDED -

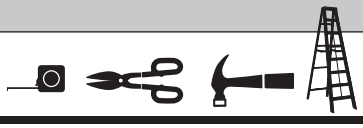

- Install drip edge over roof felt on gable side and under roof felt on eave side **(Fig. A)**.
- Do not use nails on side of drip edge that hangs over side of building.
- Only nail top of drip edge as shown.

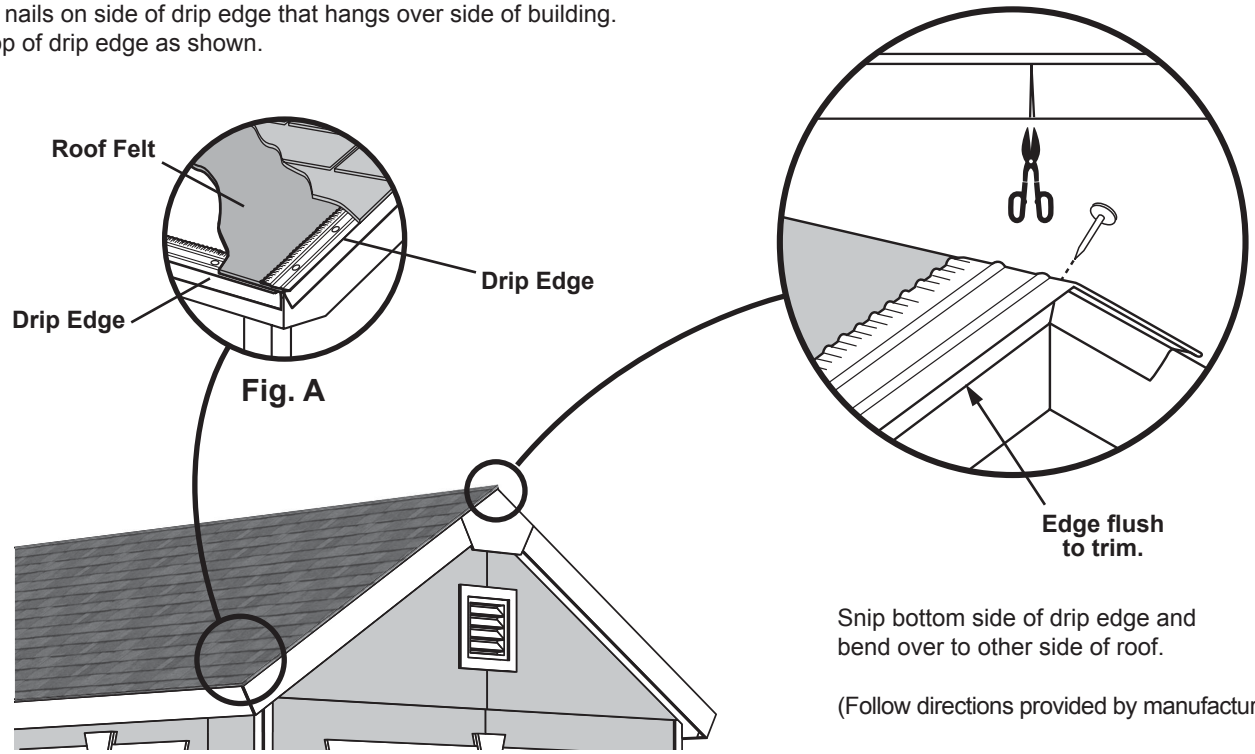

Snip bottom side of drip edge and bend over to other side of roof.

(Follow directions provided by manufacturer.)

SHINGLES
- NOT INCLUDED -

• **Follow directions provided by manufacturer and these instructions.**

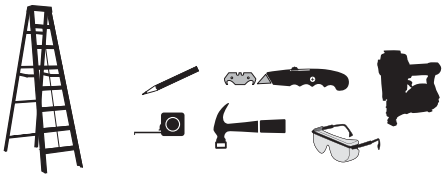

⚠ **Familiarize yourself with a 3-Tab Shingle.**

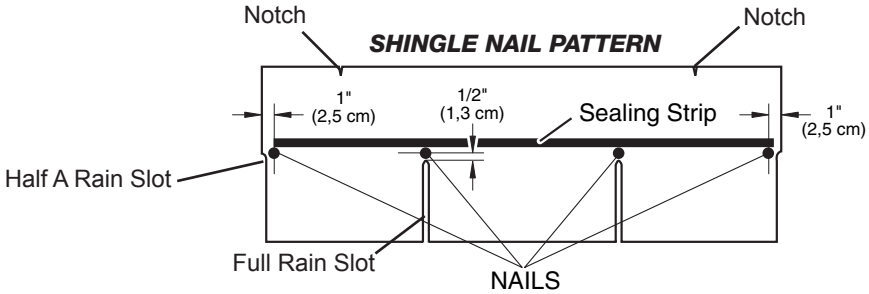

⚠ **NEVER DRIVE FASTENERS INTO OR ABOVE SEALING STRIPS.**

✓**BEGIN**

1 Install first starter row upside down and color up with a 1" overhang at back and bottom of roof panel. Use (4) nails per shingle.
Starter row must be straight and level all the way across with lower edge of roof deck.
NOTE: If you have installed drip edge install shingles flush to drip edge.

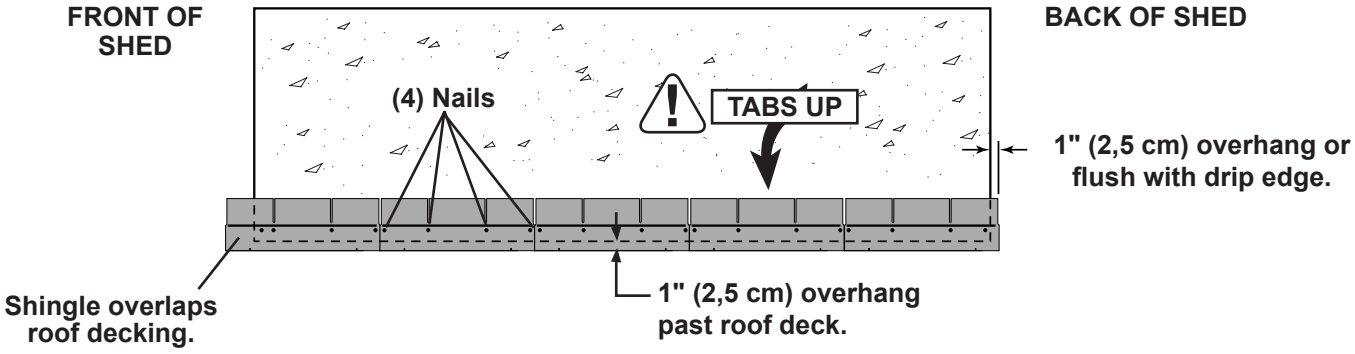

2 Beginning at front of shed, install first row of shingles with notch at 1" past roof edge or flush with drip edge.

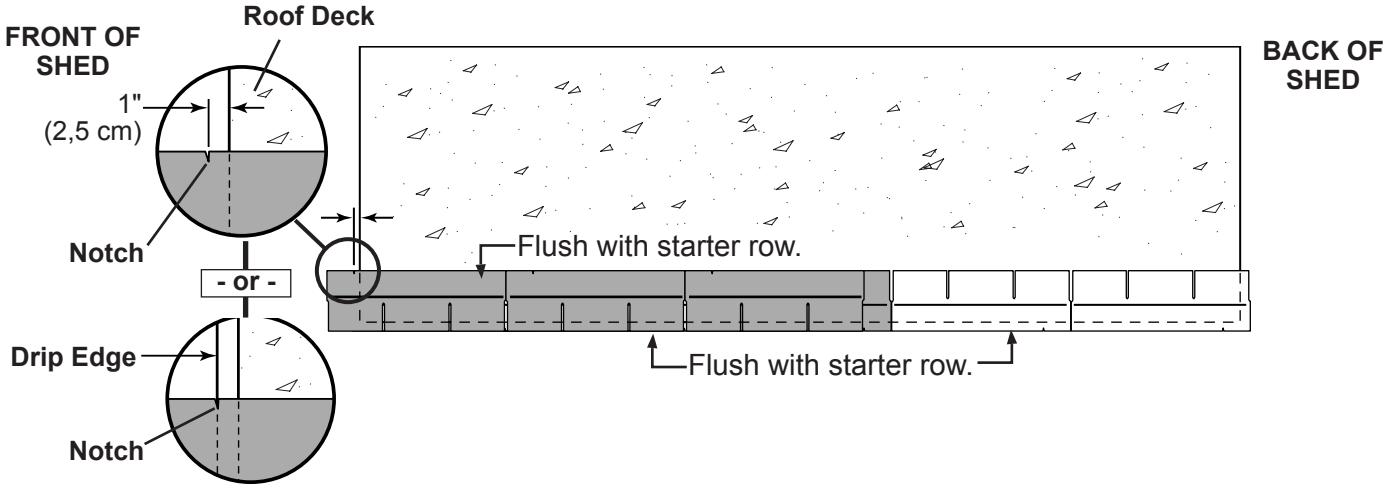

3 Install second row of shingles flush at top of first row's rain slots. Ensure 1" overhang or flush to drip edge at front, stagger each row.

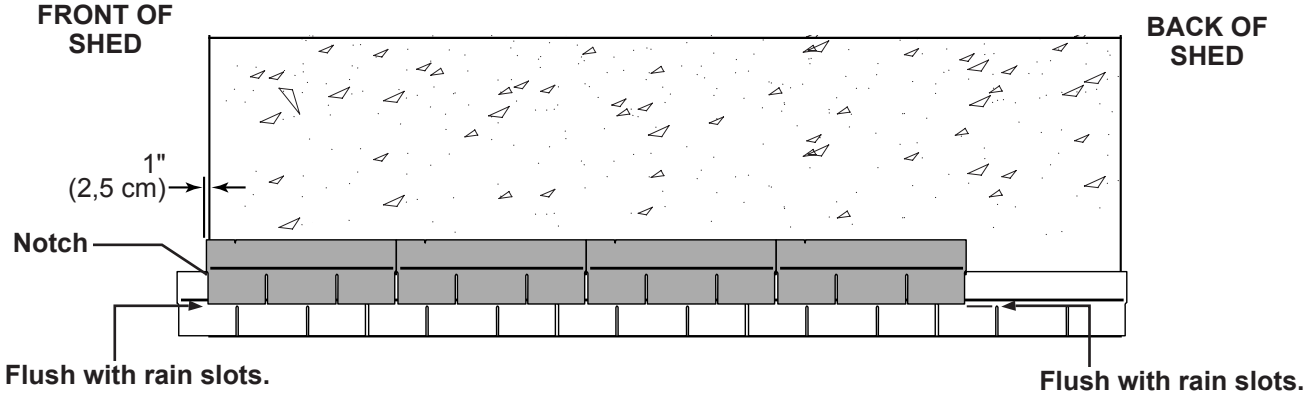

4 Continue installing rows of shingles by staggering at front.

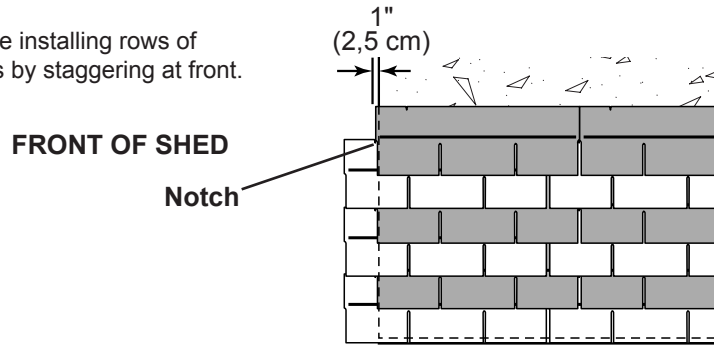

5 Continue installing rows of shingles to the peak. At the peak make sure there is a maximum of 5" or less to the rain slot, as shown below. If shingles overlap at ridge cut to peak with a utility knife.

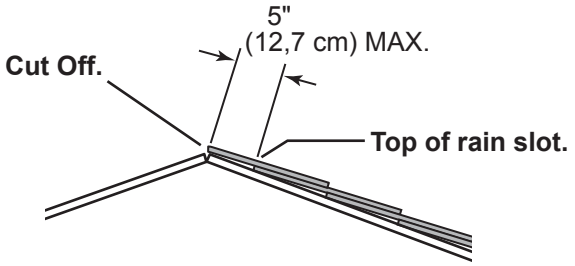

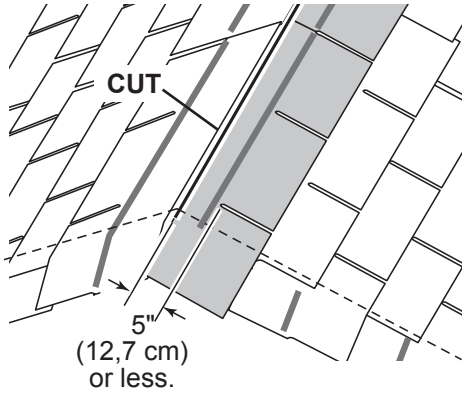

⚠ **• If more than 5" to rain slot you must install another row of shingles.**

6 Repeat steps 1 - 5 to shingle the opposite side of your roof. Trim shingles at ridge.

7 Once both sides are shingled you need to trim ends. Strike a chalk line 1" from edge.

8 Using your shingle hooked blade carefully cut shingles along chalk line.

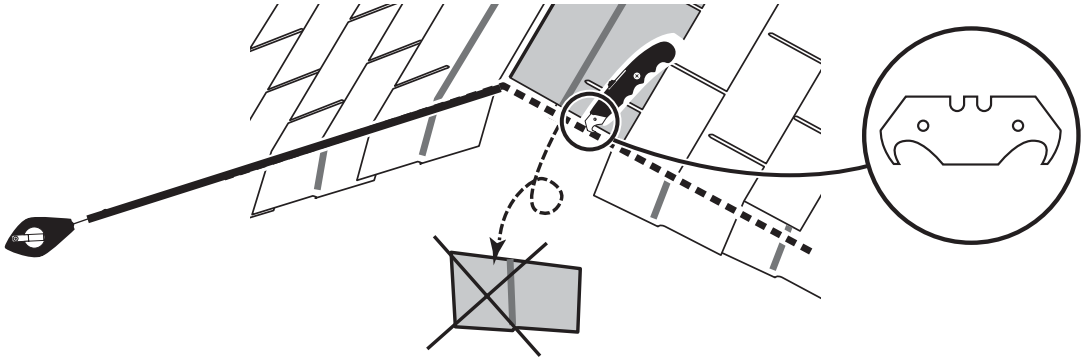

FINISH

You have finished shingling your roof. Proceed to capping the ridge.

SHINGLES - RIDGE CAP

• You will finish off the top of the roof with a ridge cap made from shingles.

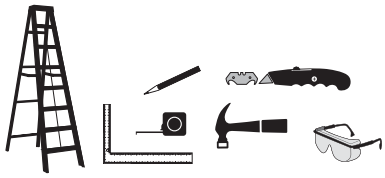

✓BEGIN

1 Cut shingles into THREE pieces. **Hint:** Use cut-off pieces first.

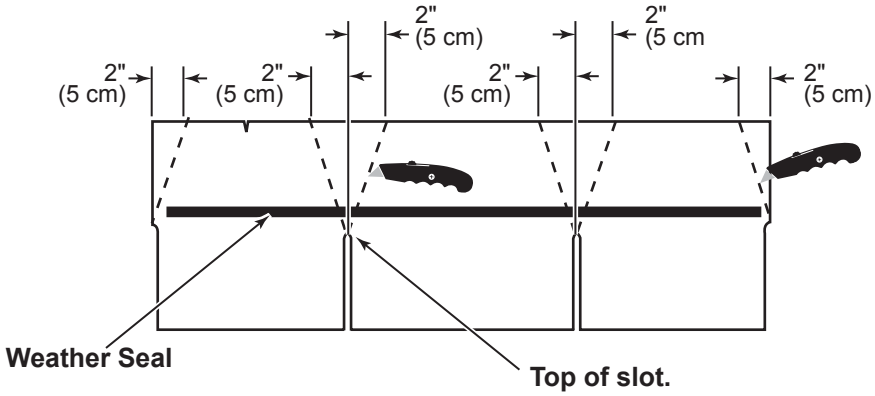

Score shingle, then snap-off angled cut.

Note: • You will need about 32 - 34 cut pieces.

2 Install first ridge cap flush to shingles at front, as shown.

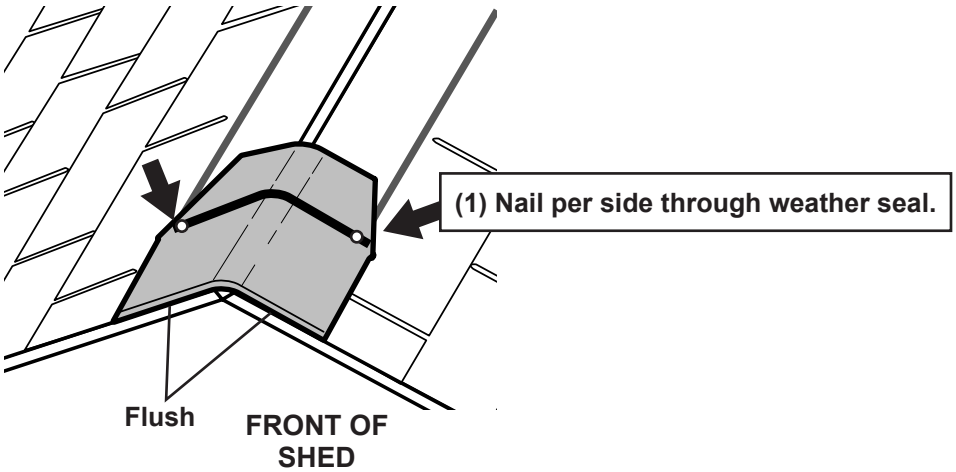

3 Install second ridge cap 5" back, as shown.

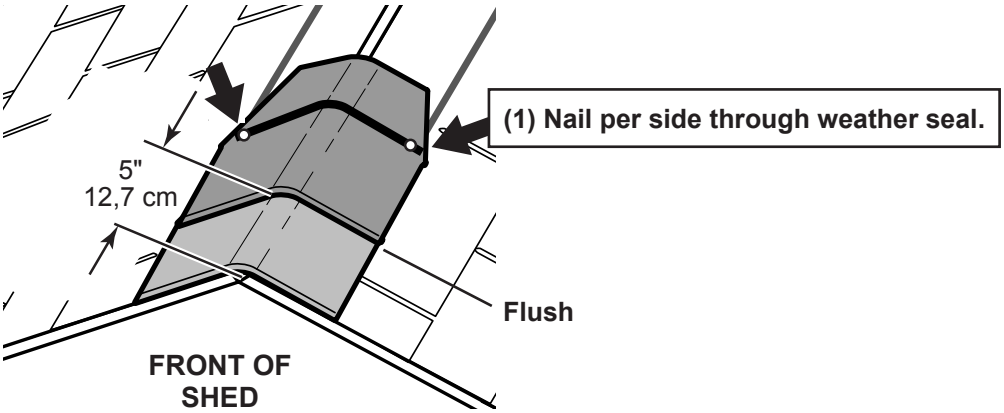

SHINGLES - RIDGE CAP
continued...

4 Continue installing ridge cap to back of roof.

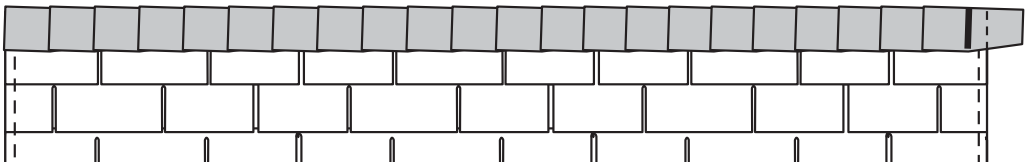

5 Make sure there is 4" between the shingle-color and edge of shingles.

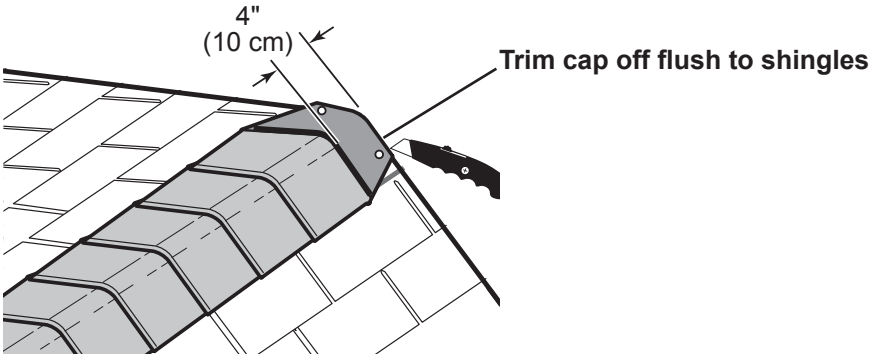

6 When you have 4" minimum of shingle color cut one piece to cap your roof.

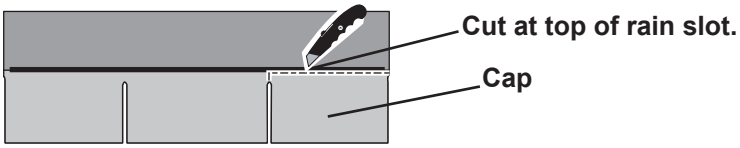

7 Install flush to shingles.

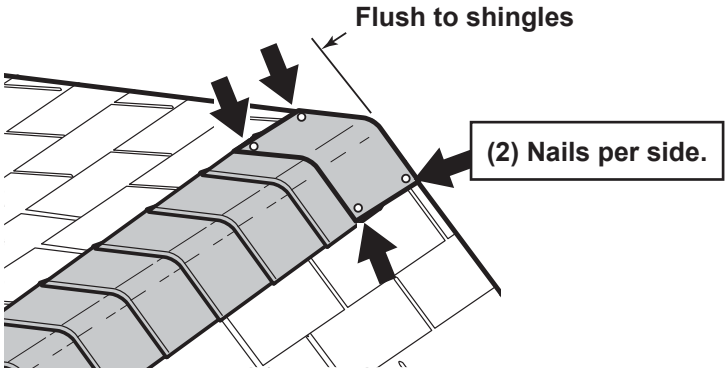

FINISH

You have finished your ridge cap.

WARRANTY REGISTRATION
Please complete your warranty registration to properly validate your warranty.
Register your product online at:www.OnlineWarranty.net.

LIMITED CONDITIONAL WARRANTY*
Backyard Storage Solutions, LLC warrants the following:
1. Every product is warranted from defects in workmanship and manufacturing for 1 year.
2. All accessories, hardware and metal components are warranted for 2 years.
3. All Oriented Strand Board (OSB) is warranted for 2 years
4. Siding and Trim is warranted for 15 years.
5. Solar Shed windows are warranted for 1 year.
6. Cedar lumber is warranted for 15 years.
7. Preserved Pine is warranted for 10 years.

Backyard Storage Solutions, LLC will repair, replace or pay for the affected part. In no event shall Backyard Storage Solutions, LLC pay the cost of labor or installation or any other costs related thereto. All warranties are from date of purchase. If a cash refund is paid on an affected part, it will be prorated from the date of purchase.

CONDITIONS
The warranty is effective only when:
1. The unit has been erected in accordance with the assembly instructions.
2. The unit has been properly shingled and painted or stained and reasonably and regularly maintained thereafter.
3. The failure occurs when the unit is owned by the original purchaser.
4. Backyard Storage Solutions, LLC has received the warranty registration card within thirty (30) days of purchase and notification of the failure in writing within the warranty period specified above.
5. Backyard Storage Solutions, LLC has had reasonable opportunity during the sixty (60) days following receipt of notification to inspect and verify the failure prior to commencement of any repair work.

REQUIREMENTS
Storage Buildings
To validate your warranty, it is necessary to properly maintain your Backyard Storage Solutions, LLC unit; shingle the roof and paint or solid-colored stain the siding using quality, 100% acrylic latex exterior product with a minimum of two (2) coats within thirty (30) days of assembly; caulk above all doors and all horizontal and vertical trim boards; paint and seal all exposed edges, sides and faces of siding/trim and OSB siding to include all exterior walls and all sides and all edges of doors.

Gazebos & Pergolas
To validate your warranty, it is necessary to properly maintain your Backyard Storage Solutions, LLC unit. This includes treating all of the exposed cedar and pine surfaces on your gazebo or pergola structure with an exterior grade wood preservative, an exterior oil-based semi-transparent stain, an acrylic latex exterior paint or an acrylic latex solid color exterior stain within 30 days of assembly and as needed thereafter to maintain your warranty.

Keep vegetation trimmed away from building and make sure siding panels and trim do not come in contact with masonry or cement. The minimum ground clearance for siding must be one half inch (½ inch) from concrete slab or two and one half inches (2 ½") from the ground when building is erected or constructed on a treated wood floor kit. Water from sprinklers must be kept off unit. In no event will Backyard Storage Solutions, LLC be responsible for any indirect, incidental, consequential or special damages nor for failure(s) that are caused by events, acts or omissions beyond our control including, but not limited to, misuse or improper assembly, improper maintenance (which eventually leads to rot or decay) and acts of God. Backyard Storage Solutions, LLC will not be held responsible for any labor costs incurred to construct your unit.
This warranty gives you certain specific rights that vary from state to state.

CLAIM PROCEDURE
To make a claim under this warranty, you can either call 1-888-827-9056 or email: customerservice@backyardproducts.com.
Please have ready the information below when you call or include the information in your email:
1. The model and size of the product.
2. A list of the part(s) for which the claim is made.
3. Proof of purchase of the Backyard Storage Solutions, LLC item, as shown on the original invoice.
4. Run code: found on exterior product label or assembly instructions enclosed in the product package.

All other inquiries can be mailed to:
Backyard Storage Solutions, LLC
Attn: Customer Service
1000 Ternes
Monroe, MI 48162

***WARRANTY TERMS MAY VARY OUTSIDE THE U.S.A.**
IMPORTANT: This is your warranty certificate.

YDL LDR: 2/3/2016