Logis Widespread- 3083020 and 3083018

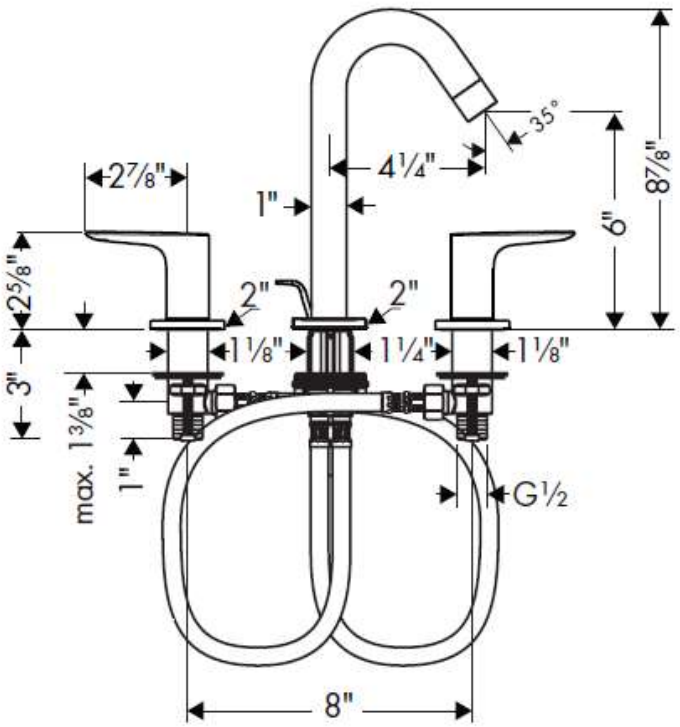
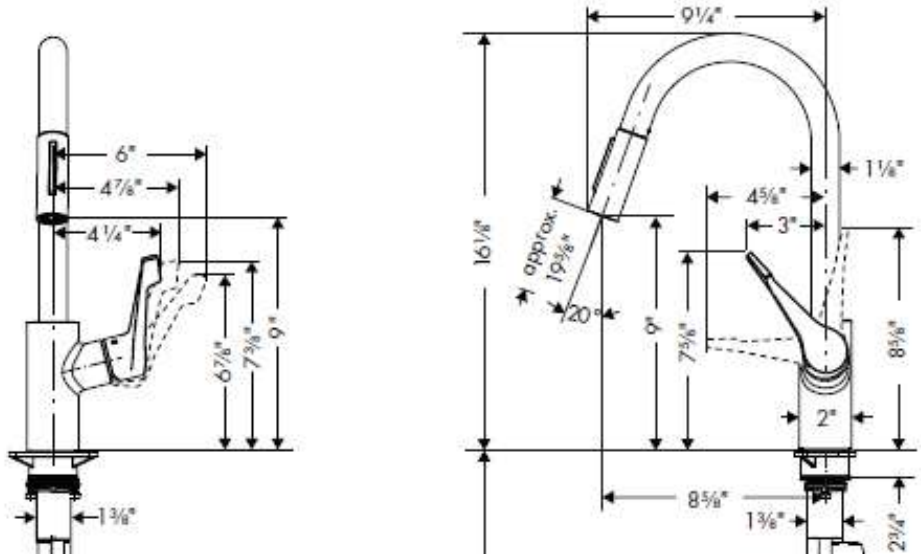
Cento XL- 1044163 and 947865