MEASURE FOR YOUR DELIVERY

Thomasville®

Walk the Path and Measure the Space

Prior to your purchase and delivery, please utilize this guide to verify clearance measurements of doors, stairways, fixtures, hallways, and/or elevators.

- ✔ **Will your hallway size allow the furniture to move through?**
- ✔ **Is your room ready for the product?**
- ✔ **Will the furniture fit through all doorways?**
- ✔ **Will the furniture fit up your stairway?**

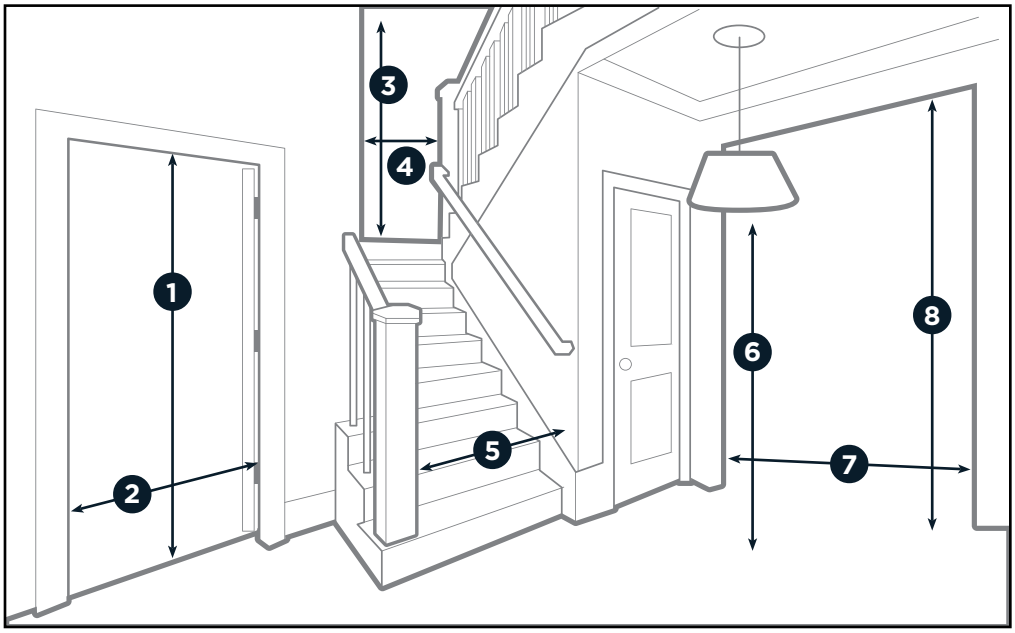

1. Exterior/front doorway height
2. Exterior/front doorway width and clearance to opposite wall
3. Stairwell overhang/ ceiling height
4. Staircase corner width and clearance to opposite wall upstairs if your stairs curve
5. Staircase width
6. Low hanging light fixtures
7. Interior doorway width and clearance to opposite wall
8. Interior doorway height

YOUR MEASUREMENTS

ex: Front Door 38” W x 80” H

_____ _____

_____ _____

_____ _____

_____ _____

For apartment buildings or homes with elevators, it is important to measure the elevator opening, and opposite wall distance.

For details on delivery services, go to **Costco.com** and click on “Customer Service”, then click “In-Home Delivery and Installation Service FAQs”

Thomasville®

HOW YOUR FURNITURE IS MEASURED

Your furniture is measured by length, width, and height (as shown below) to determine how much floor and wall space your new furniture will occupy.

MEASURING FOR YOUR FURNITURE ARRIVAL

Measure the diagonal depth and width of the furniture (as shown below) to determine if it will fit through your home's entry ways.

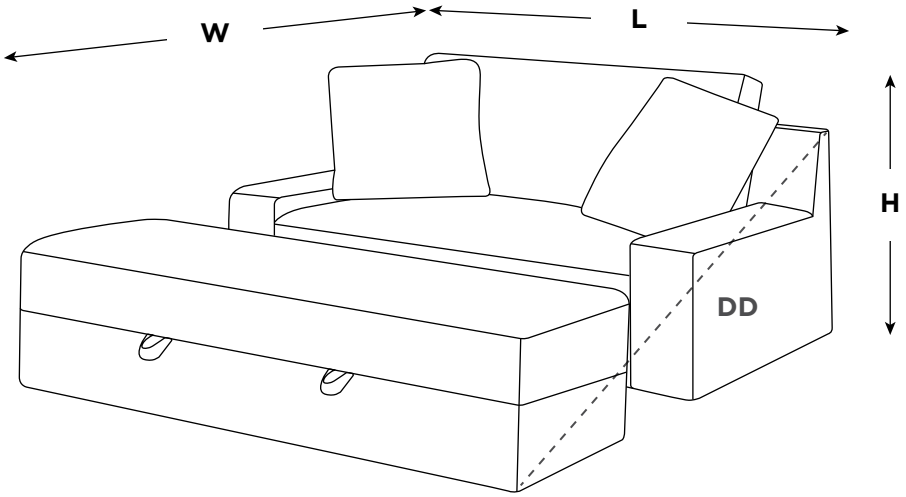

Length (L)

MEASURES LESS THAN

1	3 4 5	7 8
Entry Way	Stairway	Interior Doorways

Diagonal Depth (DD)

MEASURES LESS THAN

2	3 4 5	7 8
Entry Way	Stairway	Interior Doorways

PREPARING FOR YOUR FURNITURE ARRIVAL

Before purchasing your new furniture, note all important measurements and obstructions to ensure a successful delivery. Prepare your home by doing the following:

- [ ] Secure low hanging light fixtures
- [ ] Remove doors if necessary
- [ ] Remove pictures or art
- [ ] Place pets in another room
- [ ] Set rugs in place
- [ ] Move other furniture

Please Note: the delivery team is unable to hoist furniture, remove windows, or make other preparations for you.