IMPORTANT SAFETY INSTRUCTIONS

When using electrical appliances, especially when children are present, basic safety precautions should always be taken, including the following:

READ ALL INSTRUCTIONS BEFORE USING

KEEP AWAY FROM WATER

DANGER – Any hair dryer is electrically live even when the switch is off. To reduce the risk of death or injury by electric shock:

1. **ALWAYS UNPLUG DRYER IMMEDIATELY AFTER USING.**
2. Do not use while bathing or in the shower.
3. Do not place or store appliance where it can fall or be pulled into a tub or sink.
4. Do not place in or drop into water or other liquids.
5. If an appliance falls into water, unplug it immediately. **Do not reach into the water.**

WARNING – To reduce the risk of burns, electrocution, fire, or injury to persons:

1. **This appliance should never be left unattended when plugged in.**
2. This appliance should not be used by, on, or near children or individuals with certain disabilities.
3. Use this appliance only for its intended use as described in this manual. Do not use attachments not recommended by the manufacturer.
4. **Never operate this appliance if it has a damaged cord or plug, if it is not working properly, or if it has been dropped, damaged, or dropped into water. Return the appliance to a Conair Service Center for examination and repair.**
5. Keep the cord away from heated surfaces. **Do not pull, twist, or wrap line cord around dryer, even during storage.**
6. Never block the air openings of the appliance or place it on a soft surface, such as a bed or couch, where the air openings may be blocked. Keep the air openings free of lint, hair, and the like.
7. Never use while sleeping.
8. Never drop or insert any object into any opening.
9. Do not use outdoors or operate where aerosol (spray) products are being used or where oxygen is being administered.
10. Do not use an extension cord to operate dryer.
11. Do not direct hot air toward eyes or other heat-sensitive areas.
12. **Attachments may be hot during use. Allow them to cool before handling.**
13. Do not place appliance on any surface while it is operating.
14. **While using the appliance, keep your hair out of it. Keep your hair away from the air inlets.**
15. Do not use with a voltage converter.
16. This appliance is not a toy. Keep away from children.

SAVE THESE INSTRUCTIONS

OPERATING INSTRUCTIONS

This appliance is intended for household use. Use on Alternating Current (60 hertz) only. Standard dryers are designed to operate at 110 to 125 volts AC.

This appliance has a polarized plug (one blade is wider than the other). As a safety feature, this plug will fit in a polarized outlet only one way. If the plug does not fit fully in the outlet, reverse the plug. If it still does not fit, contact a qualified electrician. Do not attempt to defeat this safety feature.

IMPORTANT
1875 WATT OPERATING GUIDE

Use of this dryer on the same circuit or fuse with other electrical products or appliances may trip a 15 amp circuit breaker or blow a 15 amp fuse.

NEVER replace the fuse with one rated higher than the capacity of the circuit. Doing so could result in an electrical fire.

IMPORTANT
CLEANING THE FILTER

NOTE: Clean the rear filter and inlet mesh weekly with the dryer unplugged. Lint and debris buildup can lead to a slowdown in the dryer's performance and can cause the dryer to stop operating over time. If the dryer stops operating, unplug it from the outlet. Remove the rear filter and gently clean it and the outside of the inlet mesh with your fingers or the included brush.

WARNING: Do not attempt to remove the inlet mesh. It is permanently attached. If your dryer still does not operate after gently cleaning the rear filter and inlet mesh, do not attempt to use. Please call Customer Service at 1-800-3-CONAIR.

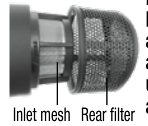

IMPORTANT SAFETY INSTRUCTIONS

AUTO-MONITORING ALCI SAFETY PLUG WITH LED INDICATOR

IF THE LED INDICATOR IS OFF WHEN THE APPLIANCE IS OPERATING, THIS INDICATES THAT THE ALCI IS NOT FUNCTIONING PROPERLY. STOP USING AND RETURN APPLIANCE TO AN AUTHORIZED SERVICE CENTER.

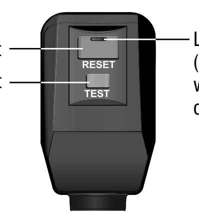

CHECK ALCI SAFETY FEATURE EVERY TIME YOU USE THE APPLIANCE.

This appliance is equipped with an auto-monitoring Appliance Leakage Circuit Interrupter (ALCI), a safety feature that provides protection under abnormal conditions, such as immersion in water. To ensure that the ALCI is functioning properly, perform the following test each time you use the appliance.

1. Plug in the appliance with the power off and press the test button on the ALCI (see diagram above).
2. If the ALCI is functioning properly, there will be an audible click, the reset button will pop out, the LED indicator will be off, and the appliance will not turn on.
3. To reset the ALCI, unplug unit. Then press the reset button and plug unit back into the outlet. The LED indicator should light up and the appliance should work normally when switched on.

WARNING – IF THE LED INDICATOR IS OFF AND THE UNIT TURNS ON, THIS INDICATES THAT THE ALCI DEVICE IS NOT WORKING PROPERLY. STOP USING THE APPLIANCE IMMEDIATELY AND RETURN IT TO AN AUTHORIZED SERVICE CENTER FOR EVALUATION.

4. If the appliance shuts off and the reset button pops up during use, this could indicate a malfunction. Remove the plug from the outlet and allow the appliance to cool. Press the reset button and plug appliance into the outlet. The appliance should then function normally. If not, send it to an authorized service center for evaluation.
5. **IF THE UNIT HAS BEEN IMMERSED IN WATER, DO NOT ATTEMPT TO RESET AND USE THE APPLIANCE. IT SHOULD BE SENT TO AN AUTHORIZED SERVICE CENTER IMMEDIATELY.**

FEDERAL COMMUNICATIONS COMMISSION NOTICE

WARNING: Changes or modifications to this unit not expressly approved by the party responsible for compliance could void the user's authority to operate the equipment.

This device complies with Part 15 of the FCC Rules. Operation is subject to the following two conditions: (1) This device may not cause harmful interference, and (2) This device must accept any interference received, including interference that may cause undesired operation.

NOTE: This equipment has been tested and found to comply with the limits for a Class B digital device, pursuant to Part 15 of the FCC Rules. These limits are designed to provide reasonable protection against harmful interference in a residential installation. This equipment generates, uses and can radiate radio frequency energy and, if not installed and used in accordance with the instructions, may cause harmful interference to radio communications. However, there is no guarantee that interference will not occur in a particular installation. If this equipment does cause harmful interference to radio or television reception, which can be determined by turning the equipment off and on, the user is encouraged to try to correct the interference by one or more of the following measures:

- Reorient or relocate the receiving antenna.
- Increase the separation between the equipment and receiver.
- Connect the equipment into an outlet on a circuit different from that to which the receiver is connected.
- Consult the dealer or an experienced radio/TV technician for help.

SUPPLIER'S DECLARATION OF CONFORMITY

Brand: Conair®
Model No.: 999/999N/999P/999AM
Description: InfinitiPRO by Conair® DigitalAire™ Pro Dryer
Responsible Party: Conair LLC,
1 Cummings Point Road, Stamford, CT 06902
(203) 351-9000
Standards: FCC Part 15 Subpart B, ANSI C63.4-2014

This device complies with Part 15 of the FCC Rules. Operation is subject to the following two conditions:
(1) This device may not cause harmful interference, and
(2) This device must accept any interference received, including interference that may cause undesired operation.

DATE OF ISSUE: 08/17/2022

FC

SUPER STYLING GUIDE

Your best looks begin with a good haircut that's well maintained. Always care for your hair with superior-quality shampoos, conditioners, and finishing products.

DRYING BASICS

1. Shampoo and condition hair with products of your choice. Rinse thoroughly. Towel-dry hair to remove excess moisture. Using the dryer along with your styling brush, start at a lower setting and direct hot air through a section of hair at a time. Move dryer steadily across each section so that the hot air passes through the hair. Direct airflow at hair, not scalp. Clouds of negatively charged ions will help to reduce static electricity, control frizzy flyaways, and contribute to your hair's shine.
2. Keep dryer's air intake vents unobstructed and free from hair while drying.
3. To avoid overdrying, do not concentrate heat on any one section for an extended length of time. Keep dryer moving as you style. For pinpoint airflow, use the snap-on concentrator attachment.
4. For quick touch-ups between shampoos, dampen hair with a mist of water before styling with the dryer.
5. When using your dryer to create curls and waves, dry hair almost completely on a warmer setting while using the included diffuser, then finish styling with cold shot feature to quickly close hair shaft and lock in style.

BODY & VOLUME

To create extra volume, turn head upside down while drying. Direct the airflow toward the roots for maximum lift. When hair is dry, toss head back and brush hair into place.

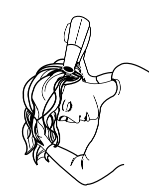

STRAIGHTENING

Work with hair in sections when creating a super-straight look. Using a large round brush (approximately 2" in diameter), hold hair taut in each section and bend ends slightly under as you dry.

MAKING WAVES

Tousled, natural-looking waves are easily created by grasping hair at the roots and scrunching between fingertips while drying.

GETTING TO KNOW YOUR DRYER

The InfinitiPRO by Conair® DigitalAire™ Pro Dryer is very effective, even at lower temperatures, and helps create healthier-looking, shiny, more manageable hair with maximum styling control.

HONEYCOMB CERAMIC HEAT TECHNOLOGY provides full-spectrum infrared heat that works on hair molecules to dry them inside and out. This fast and easy drying process helps minimize heat damage and makes hair less frizzy and more manageable.

POWERFUL DIGITAL MOTOR delivers fast airflow for styling ease and provides up to 10x longer life.*

THE IONIZING FUNCTION generates a cloud of negative ions that can:

- help reduce frizz by up to 75%**
- neutralize the generally positive charge on flyaway, frizzy hair
- eliminate static electricity
- contribute to shine

**When compared to other DC motor hair dryers.*

***When compared to hair dryers with natural ion generation.*

SELECT YOUR SETTING

speed/temp.	hair type
low/cool	delicate, thin, or easy-to-style hair
low/warm	average-to-thick or treated hair
high/hot	thick, coarse, or hard-to-style hair
cold shot	sets style in place for all hair types

STOP

This message about...

GROUND
FAULT
CIRCUIT
INTERRUPTERS

...can save a life!

IF YOU MUST USE YOUR HAIR DRYER IN THE BATHROOM, INSTALL A GFCI* NOW!
Your local electrician can help you decide which type is best for you – a portable unit that plugs into the electrical outlet or a permanent unit installed by your electrician. The National Electrical Code now requires GFCIs in the bathrooms, garages, and outdoor outlets of all new homes.

WHY DO YOU NEED A GFCI? Electricity and water don't mix. If your hair dryer falls into water while it's plugged in, the electric shock can kill you...**even if the switch is off.** A regular fuse or circuit breaker won't protect you under these circumstances. A GFCI offers you far greater protection.

A GFCI can save your life! Compared to that, the price is small! Don't wait...install one now!

**A GFCI is a sensitive device that reacts immediately to a small electric current leak by stopping the electricity flow.*

USER MAINTENANCE

Your dryer is virtually maintenance free. No lubrication is needed. For proper operating performance, the dryer must be kept clean.

When cleaning is needed, unplug the cord, allow dryer to cool, and clean dust and lint from air intake openings with a small brush or the brush attachment of a vacuum cleaner. See Cleaning the Filter section for specific instructions on cleaning the inlet mesh and rear filter. The outer surface of the dryer should be wiped clean with a cloth only.

Blocked or clogged air intake vents will cause the dryer to overheat. If overheating occurs, an automatic safety device will shut the dryer or the heat off to prevent damage or personal injury. If the unit or the heat turns off, unplug the cord and allow the dryer to cool for 10 to 15 minutes before restarting. Make sure the air vents are clean.

CAUTION

NEVER allow the power-supply cord to be pulled, twisted, or severely bent. Never wrap the cord tightly around the dryer. Damage will occur at the high flex point of entry into the dryer, causing it to rupture and short circuit. Inspect the cord frequently for damage. **Stop use immediately if damage is visible or unit stops or operates intermittently.**

If the cord or dryer is damaged or does not operate properly, return it for repair to an authorized Conair Service Representative only. No repairs should be attempted by the consumer.

STORAGE – Important
When not in use, your dryer should be disconnected, allowed to cool, and stored in a safe, dry location, out of reach of children. Do not wrap line cord around dryer. Allow the cord to hang or lie loose and straight at the point of entry into the dryer.

LED INDICATORS

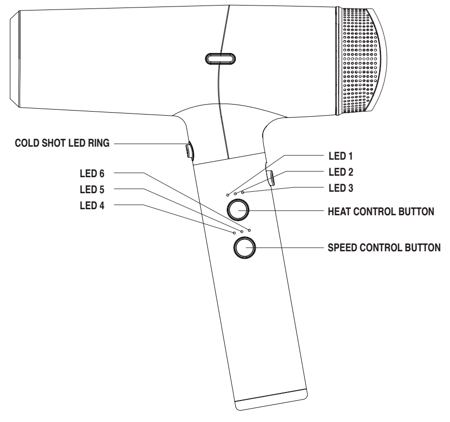

The DigitalAire™ automatically detects potential issues with the dryer and informs you through the LED indicators on the handle.

If the dryer stops working or will not start when switched on, LED 1 will start flashing. If this happens, follow the directions below:

1. Turn the power switch to the OFF position, unplug the dryer, and let it rest for 5 minutes.

2. After the dryer has rested for 5 minutes, remove the rear filter and gently wipe away any built-up debris with your fingers or the included brush. Reattach the rear filter.

3. Plug the dryer back into the outlet and turn it on to begin using. If the dryer does not go on and LED 1 is still flashing, turn the power switch to the OFF position and unplug the dryer. Your dryer has detected a fault and will need to be serviced or replaced by Conair. Please call Customer Service at 1-800-3-CONAIR.

LIMITED FOUR-YEAR WARRANTY (U.S. AND CANADA ONLY)

Conair will repair or replace (at our option) your unit free of charge for 48 months from the date of purchase if the appliance is defective in workmanship or materials.

To obtain service under this warranty, return the defective product to the service center listed on back, together with your purchase receipt. California residents need only provide proof of purchase and should call 1-800-3-CONAIR for shipping instructions. In the absence of a purchase receipt, the warranty period shall be 48 months from the date of manufacture.

ANY IMPLIED WARRANTIES, OBLIGATIONS, OR LIABILITIES, INCLUDING BUT NOT LIMITED TO THE IMPLIED WARRANTY OF MERCHANTABILITY AND FITNESS FOR A PARTICULAR PURPOSE, SHALL BE LIMITED IN DURATION TO THE 48-MONTH DURATION OF THIS WRITTEN, LIMITED WARRANTY. Some states do not allow limitations on how long an implied warranty lasts, so the above limitations may not apply to you.

IN NO EVENT SHALL CONAIR BE LIABLE FOR ANY SPECIAL, INCIDENTAL, OR CONSEQUENTIAL DAMAGES FOR BREACH OF THIS OR ANY OTHER WARRANTY, EXPRESS OR IMPLIED, WHATSOEVER. Some states do not allow the exclusion or limitation of special, incidental, or consequential damages, so the above limitation may not apply to you.

This warranty gives you specific legal rights, and you may also have other rights, which vary from state to state.

Please register this product at register.conair.com

SERVICE CENTER
CONAIR LLC
Service Department
7475 N. Glen Harbor Blvd.
Glendale, AZ 85307

©2024 CONAIR LLC

For info on any Conair® or InfinitiPRO by Conair® product, call **1-800-3-CONAIR** or visit us on the web at **www.conair.com**

24PD091648 IB-24/185

INFINITIPRO BY CONAIR

DIGITALAIRE™

STYLING ATTACHMENTS INCLUDED

INSTRUCTION & STYLING GUIDE

- MODELS 999 -

For your safety and enjoyment of this product, always read the instruction booklet carefully before using.

ALTO

Este mensaje sobre los…

GROUND
FAULT
CIRCUIT
INTERRUPTERS
(Interruptores de circuito de falla a tierra)

…puede salvar una vida.

¡SI DEBE USAR EL SECADOR EN EL CUARTO DE BAÑO, INSTALE UN INTERRUPTOR DE CIRCUITO DE FALLA A TIERRA* AHORA!
Su electricista le puede ayudar a decidir qué sistema elegir: Un sistema removible que se conecta a la toma de corriente o un sistema permanente que él instalará. El Código Nacional de Electricidad ahora exige que todos los enchufes situados en los cuartos de baño, los garajes y las partes exteriores de las casas nuevas sean equipados con un interruptor de circuito de falla a tierra (GFCI, por sus siglas en inglés).

¿POR QUÉ NECESITA UN INTERRUPTOR DE CIRCUITO DE FALLA A TIERRA? La electricidad y el agua no deben juntarse. Si el aparato se cae al agua mientras está conectado, una descarga eléctrica puede causar su muerte…**aunque el interruptor esté en la posición de apagado.** Un fusible o un disyuntor/interruptor de circuito regular no le protegerán en esta situación. Un interruptor de circuito de falla a tierra ofrece más protección.

¡Un interruptor de circuito de falla a tierra puede salvar su vida! ¡Comparado con ella, el precio es bajo! ¡No espere…instale uno ahora mismo!

**Un interruptor de circuito de falla a tierra (GFCI, por sus siglas en inglés) es un dispositivo sensible que reacciona inmediatamente a una pequeña pérdida de corriente, deteniendo el flujo de electricidad.*

INSTRUCCIONES DE MANTENIMIENTO

Este aparato requiere poco mantenimiento. No requiere lubricación. Para que funcione correctamente, debe mantenerlo limpio.

Cuando sea necesario limpiarlo, desenchúfelo, deje que se enfríe y quite el polvo y las pelusas de los orificios de ventilación con un cepillo pequeño o el cepillo accesorio de una aspiradora. Consulte la sección "Limpieza del filtro" para obtener instrucciones específicas sobre la limpieza de la malla interna y del filtro. La superficie exterior del secador solo se debe limpiar con un paño limpio.

El secador se recalentará si los orificios de ventilación están obstruidos o tapados. Si esto sucede, un sistema de seguridad apagará el secador o cortará la temperatura automáticamente para evitar daños al aparato o lesiones. En caso de que esto suceda, apague el aparato, desenchúfelo y deje que se enfríe por 10-15 minutos. Compruebe que los orificios de ventilación estén limpios.

PRECAUCIÓN

NUNCA jale, retuerza ni doble mucho el cable. Nunca lo enrolle con fuerza alrededor del aparato; esto puede dañar la junta flexible que lo conecta al aparato, produciendo su rotura o un cortocircuito. Revise el cable a menudo para comprobar que no esté dañado. **Interrumpa inmediatamente el uso si el cable está visiblemente dañado, o si el aparato deja de funcionar o funciona de forma intermitente.**

Si el cable o el aparato están dañados o si el aparato no funciona correctamente, devuélvalo a un centro de servicio autorizado. No intente repararlo.

ALMACENAMIENTO – Importante
Después del uso, desenchufe el aparato, deje que se enfríe y guárdelo en un lugar seco y seguro, fuera del alcance de los niños. No enrolle el cable alrededor del aparato; deje que cuelgue, o que la junta que lo conecta al aparato esté suelta y recta.

INDICADORES LED

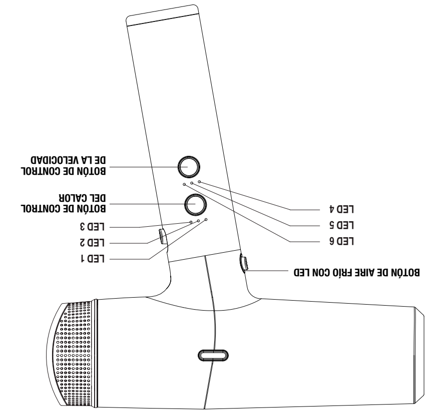

El secador digital DigitalAire™ detecta automáticamente las fallas técnicas y le informa a través del indicador "LED 1" en el mango.

Si el secador deja de funcionar o no se pone en marcha al encenderlo, el indicador "LED 1" empezará a parpadear. Si esto sucede, siga las instrucciones a continuación:

1. Apague el aparato y deje que se enfríe por 5 minutos.

2. Después de este tiempo, quite el filtro trasero y limpie suavemente este y su malla con los dedos o el cepillo de limpieza provisto. Vuelva a instalar el filtro.

3. Enchufe el aparato y enciéndalo. Si no se pone en marcha y el indicador luminoso "LED 1" sigue parpadeando, apague y desenchufe el aparato. El secador ha detectado una falla técnica y debe ser reparado o sustituido por Conair. Llame a nuestro a nuestro servicio de atención al cliente al 1-800-3-CONAIR.

GARANTÍA LIMITADA DE CUATRO AÑOS (VÁLIDA EN LOS EE. UU. Y EN CANADÁ SOLAMENTE)

Conair reparará o remplazará (a su opción) este producto sin cargo por un período de 48 meses a partir de la fecha de compra si presenta defectos de fabricación o materiales.

Para obtener servicio técnico bajo esta garantía, devuelva el producto defectuoso al Centro de Servicio indicado en el reverso, junto con su recibo de compra. Los residentes de California solo necesitan dar una prueba de compra y deben llamar al 1-800-3-CONAIR para recibir instrucciones de envío. En ausencia del recibo de compra, el período de garantía será de 48 meses a partir de la fecha de fabricación.

CUALQUIER GARANTÍA, OBLIGACIÓN O RESPONSABILIDAD IMPLÍCITAS, INCLUYENDO, PERO NO LIMITADAS A LA GARANTÍA IMPLÍCITA DE COMERCIABILIDAD E IDONEIDAD PARA UN FIN DETERMINADO, ESTARÁN LIMITADAS POR LOS 48 MESES DE LA PRESENTE GARANTÍA ESCRITA. Algunos Estados no permiten limitaciones en la duración de una garantía implícita, de modo que las limitaciones mencionadas pueden no regir para usted.

CONAIR NO SERÁ RESPONSABLE, EN NINGÚN CASO, POR NINGÚN DAÑO ESPECIAL, INCIDENTAL O CONSECUENTE DEBIDO AL INCUMPLIMIENTO DE ESTA O CUALQUIER OTRA GARANTÍA, EXPRESA O IMPLÍCITA. Algunos Estados no permiten la exclusión o limitación de daños especiales, incidentales o consecuentes, de modo que las limitaciones mencionadas pueden no regir para usted.

Esta garantía le otorga derechos legales específicos y usted puede tener otros derechos que varían de un Estado a otro.

Para registrar este producto, visite: register.conair.com

SERVICIO AL CLIENTE
CONAIR LLC
Service Department
7475 N. Glen Harbor Blvd.
Glendale, AZ 85307

©2024 CONAIR LLC

Para más información sobre los productos Conair® o InfinitiPRO by Conair®, llame al **1-800-3-CONAIR** o visite **www.conair.com**

24PD091648 IB-24/185

INFINITIPRO BY CONAIR

DIGITALAIRE™

ACCESORIOS INCLUIDOS

INSTRUCCIONES Y GUÍA DE PEINADO

- MODELOS 999 -

Para su seguridad y para disfrutar plenamente de este producto, siempre lea atentamente las instrucciones antes del uso.