INSTALLATION INSTRUCTIONS

2022-2026 SILVERADO/SIERRA 1500 CREW CAB;
2024-2027 SILVERADO/SIERRA 2500/3500 CREW CAB E-POWER BOARD STEPS
PART #GM-4601

Mechanical PARTS LIST:

Qty	Item Description	Qty	Item Description
2	Running Boards	14	8mm Lock Washers
1	Driver/Left Front Linkage Assembly	14	8mm x24x2mm Flat Washers
1	Passenger/Right Front Linkage Assembly	2	8mm Hex Nuts
2	Rear Linkage Assembly	2	8-1.25x40mm Bolt Plates
1	Electronic Materials Package	16	6mm Nylon Lock Nuts
2	Front Steel Mounting Brackets	16	6mm x 16mm x 1.6mm Flat Washers
2	Rear Steel Mounting Brackets	16	6-1.0x20mm Carriage Bolts
16	8mm Flange Lock Nuts	2	Plastic Retainers
16	8-1.25x30mm Carriage Bolts	15	Zip Ties
12	8-1.25x30mm Hex Bolts	5	Double Sided Adhesive Tapes

Electronic Materials Package PARTS LIST:

Qty	Item Description	Qty	Item Description
1	Main Harness	1	ECU
2	Wire Taps	4	LED lights
1	LED Y-Harness (280mm)	1	LED Y-Harness (1200mm)

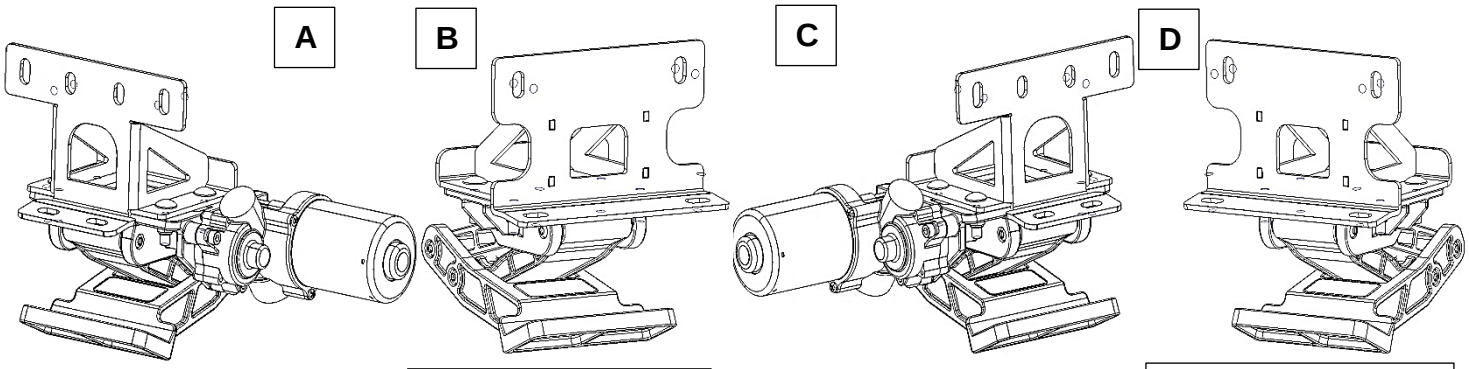

Driver Front Bracket Assembly | Driver Rear Bracket Assembly | Passenger Front Bracket Assembly | Passenger Rear Bracket Assembly

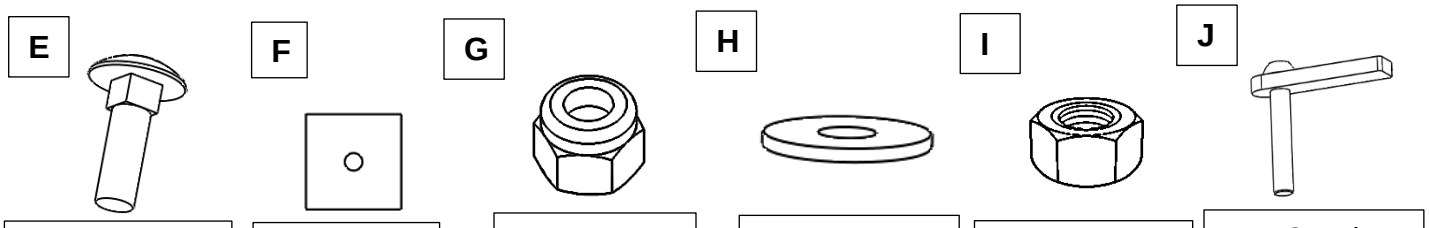

M6 Carriage Bolt | Plastic Retainer | M6 Nylon Lock Nut | Flat Washer | M8 Hex Nut | M8 Bolt Plate

BODYARMOR4X4.COM
CALL US: 951.808.0750
ORDERS@BODYARMOR4X4.COM

INSTALLATION INSTRUCTIONS

K



M8 Hex Bolt

L



Lock Washer

R

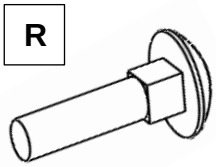

M8 Carriage Bolt

S

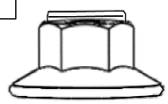

M8 Flanged Lock Nut

*__NOTE:__ Driver and Passenger Rear Bracket Assemblies are the same.

M

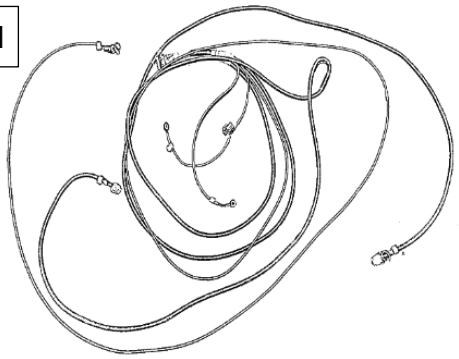

Main Harness

N1



LED Y-Harness (1200mm)

N2



LED Y-Harness (280mm)

O

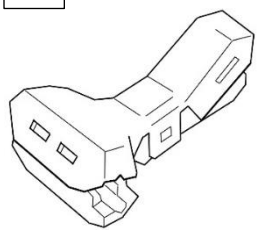

Wire Taps

P

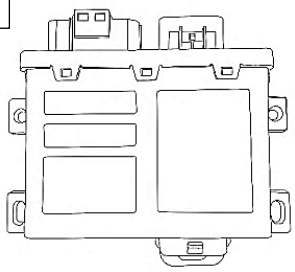

ECU

Q

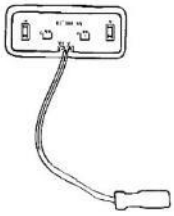

LED Lights

T

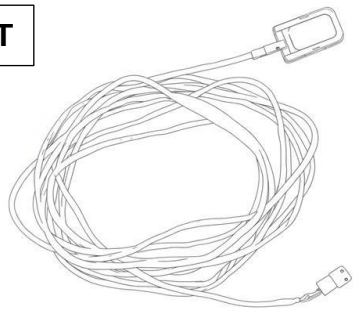

Toggle Switch

This is an optional accessory, not included in standard kit.

TOOLS REQUIRED

 Rachet	 Socket 8mm 10mm 13mm	 Extensions	 Wrenches	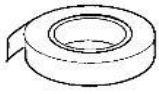 Electrical Tape

BODYARMOR4X4.COM
CALL US: 951.808.0750
ORDERS@BODYARMOR4X4.COM

1

Locate Driver Side front mounting points on the rocker panel under the front door. Remove any OE plastic insert caps on the mounting area. Insert the bolt plate (J) into the upper left hole with the bolt threads facing the frame. Use the plastic retainer (F) to keep the bolt plate in place for mounting.

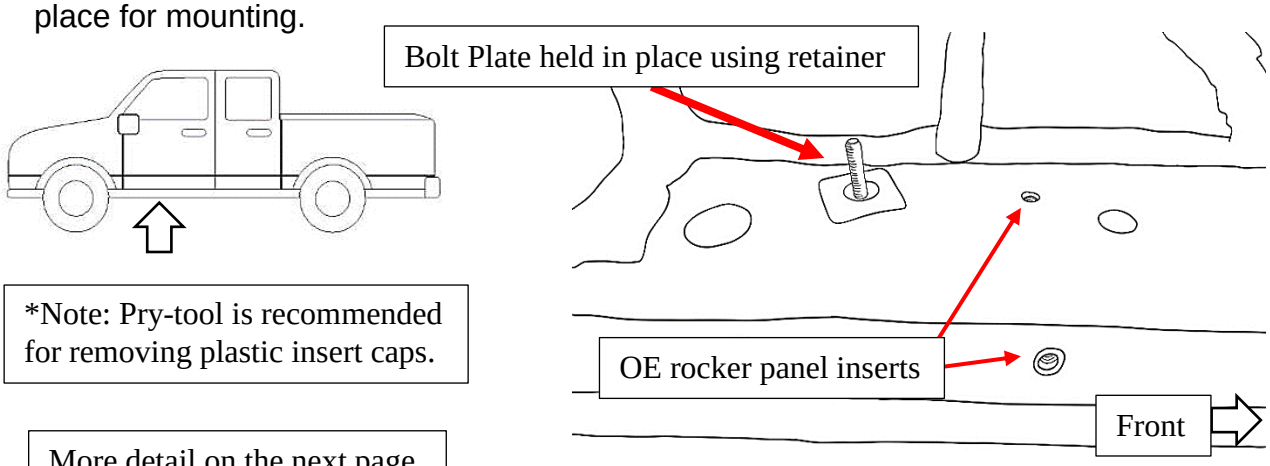

*Note: Pry-tool is recommended for removing plastic insert caps.

More detail on the next page

The front mounting bracket will use 3 mounting points. The front bracket is designed to be multi-use between different models and Driver-side/Passenger-side, meaning that it will have a few holes that are unused once it is installed. Depending on the vehicle model, the exact number of holes is not always consistent. The picture below shows which holes will be used.

BODYARMOR4X4.COM
CALL US: 951.808.0750
ORDERS@BODYARMOR4X4.COM

Using a pry tool, remove the plastic inserts blocking the specific holes we will use:

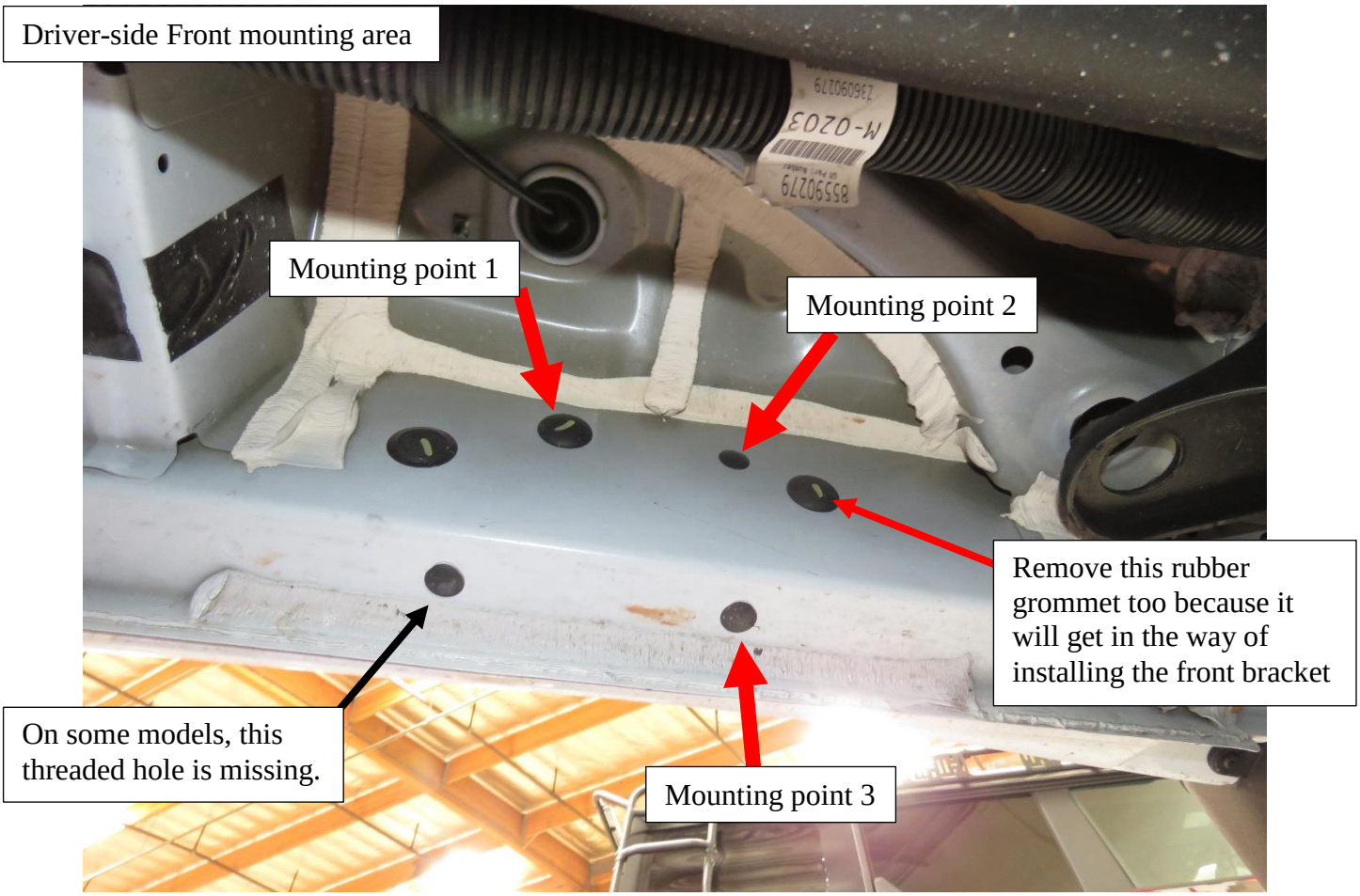

When the Driver-side Front Mounting Bracket is installed, it will use only 3 of the holes on the bracket. It will look like this:

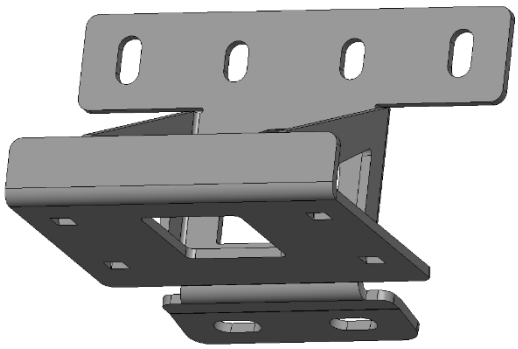

Note: Front Bracket is not the same as the rear bracket

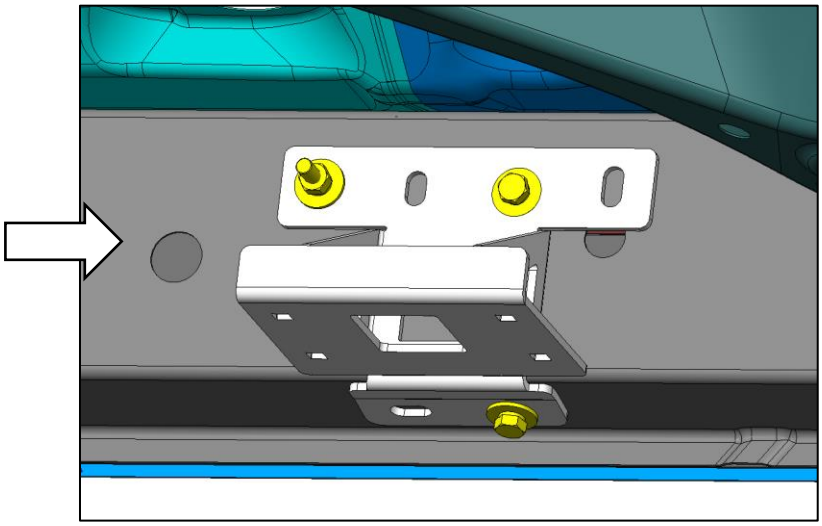

BODYARMOR4X4.COM
CALL US: 951.808.0750
ORDERS@BODYARMOR4X4.COM

After removing the plastic inserts, be sure to put the bolt plate into the larger hole.



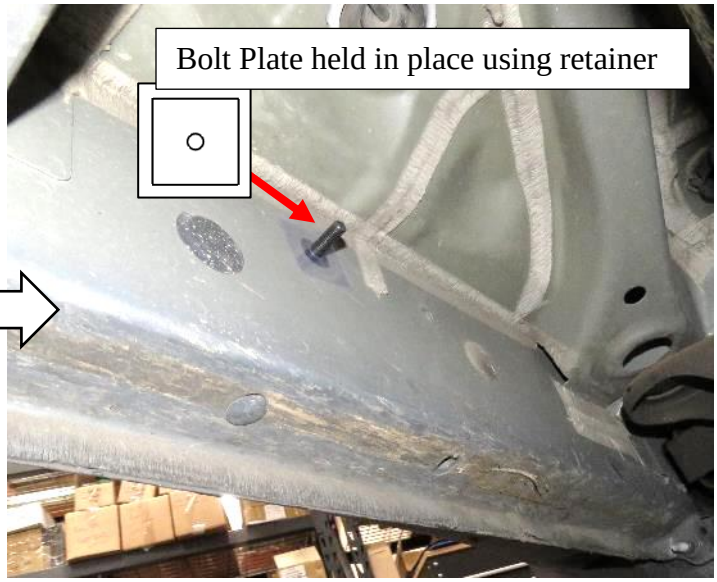

Once finished, move over to the rear mounting area and remove the plastic inserts for each mounting point there too. See below for pictures:

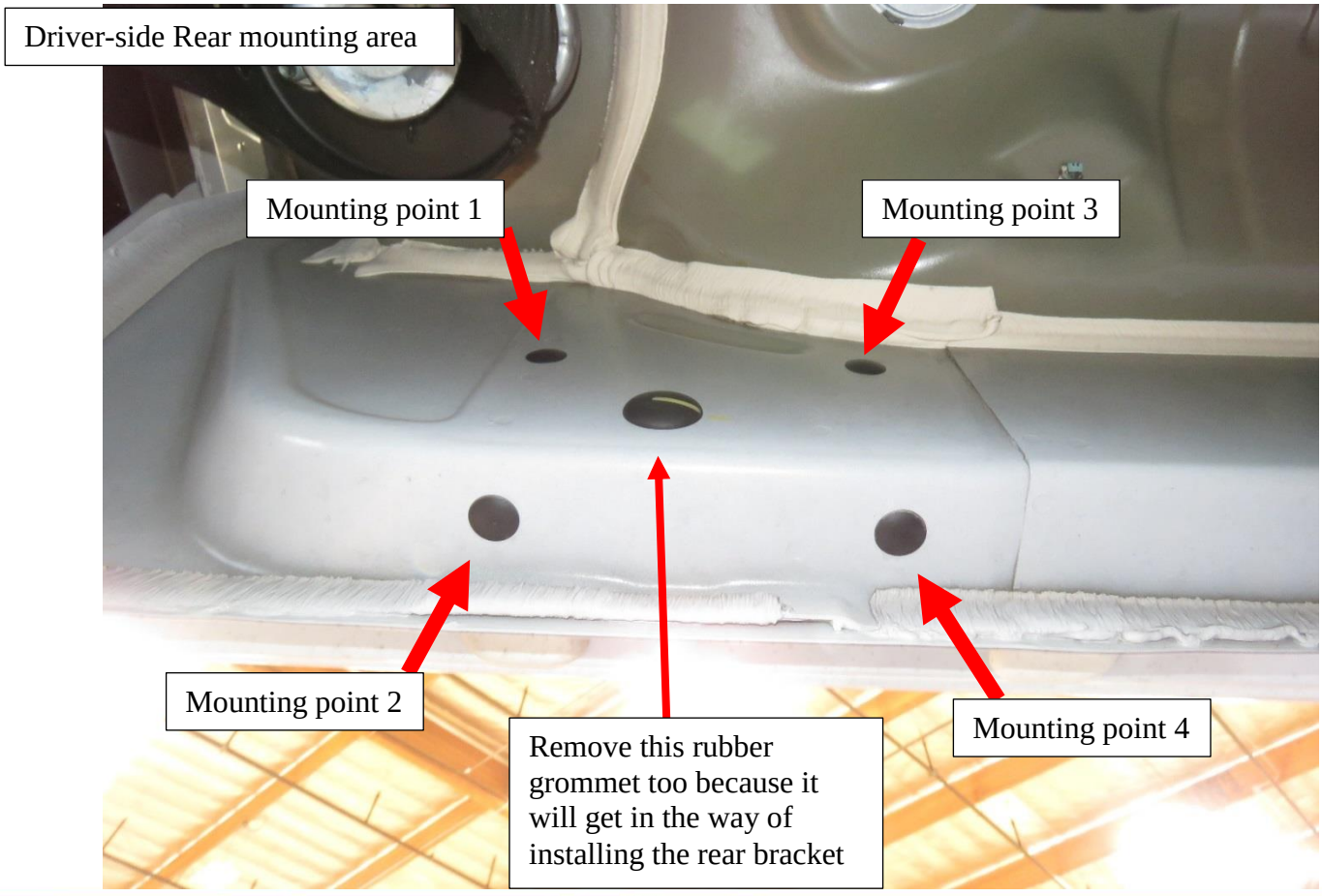

BODYARMOR4X4.COM
CALL US: 951.808.0750
ORDERS@BODYARMOR4X4.COM

On some vehicle models, rear mounting points 3 & 4 will be missing. In those cases, do not worry and just use mounting points 1 & 2 like you would normally. Here is an example:

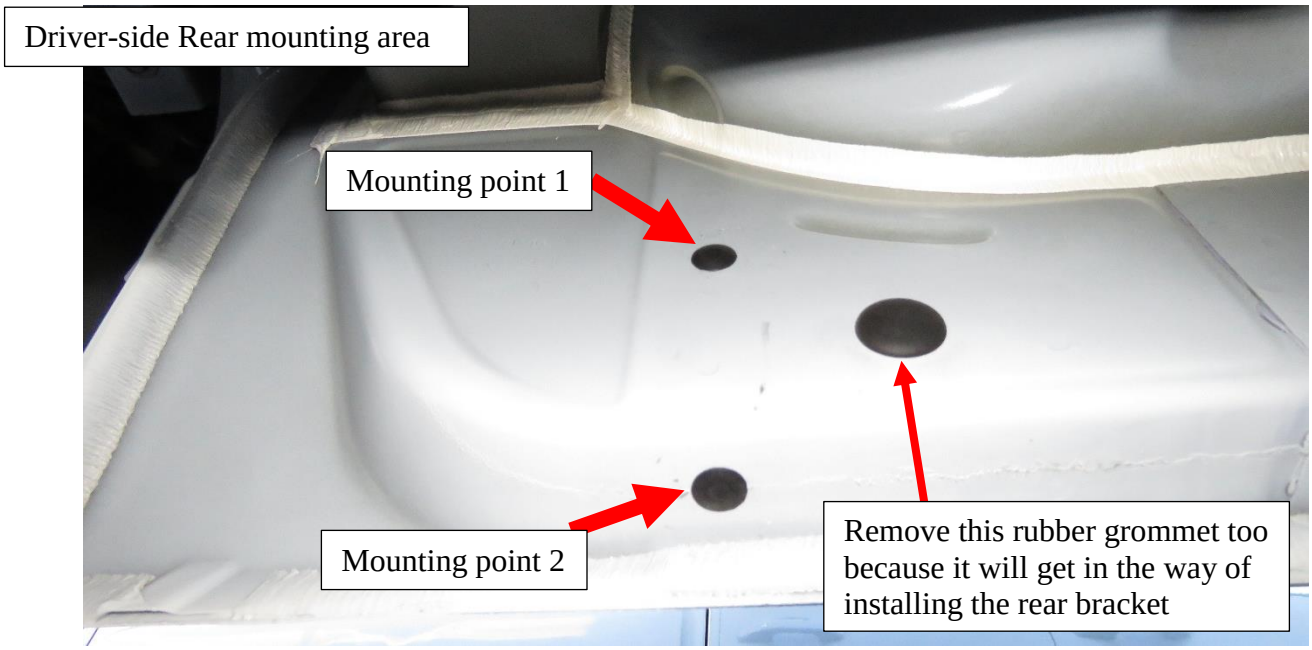

For the rear mounting area, no bolt plate is needed. The rear brackets are designed work on either Driver-side or Passenger-side and need only 2 mounting points for full functionality. If all 4 mounting points are available, feel free to use all 4 for additional strength.

When the Driver-side Rear Mounting Bracket is installed, it will use whatever holes are available on the vehicle's rocker panel. It will look like this:

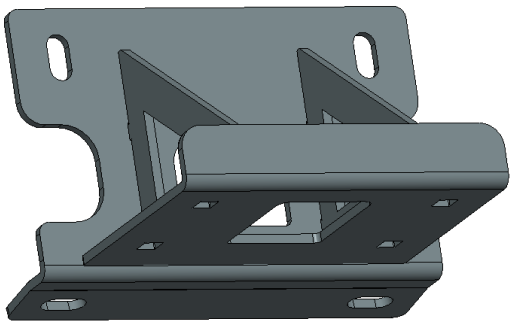

Note: Rear bracket is not the same as the front bracket

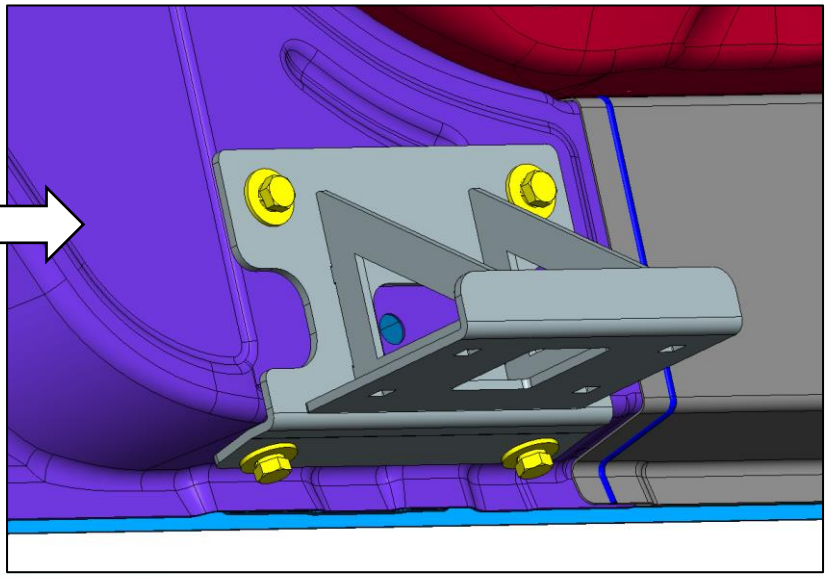

BODYARMOR4X4.COM
CALL US: 951.808.0750
ORDERS@BODYARMOR4X4.COM

2

Take the front and rear mounting brackets and attach them to the linkage arms. First, insert the M8 Carriage Bolts into the square slots on the brackets with the threads facing downwards.

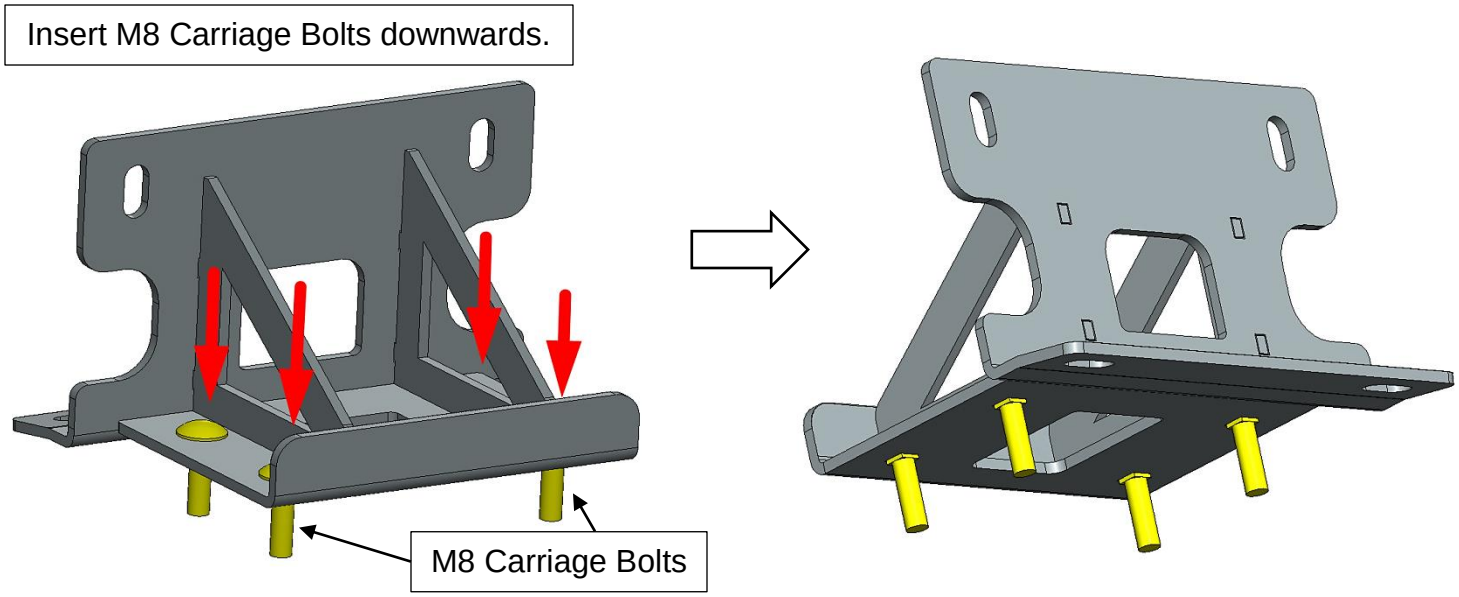

Next, use the M8 Flanged Nylon Lock Nuts to fasten the aluminum linkage arms to the brackets. There are 4 fastening points on each bracket. Do this for FRONT & REAR brackets.

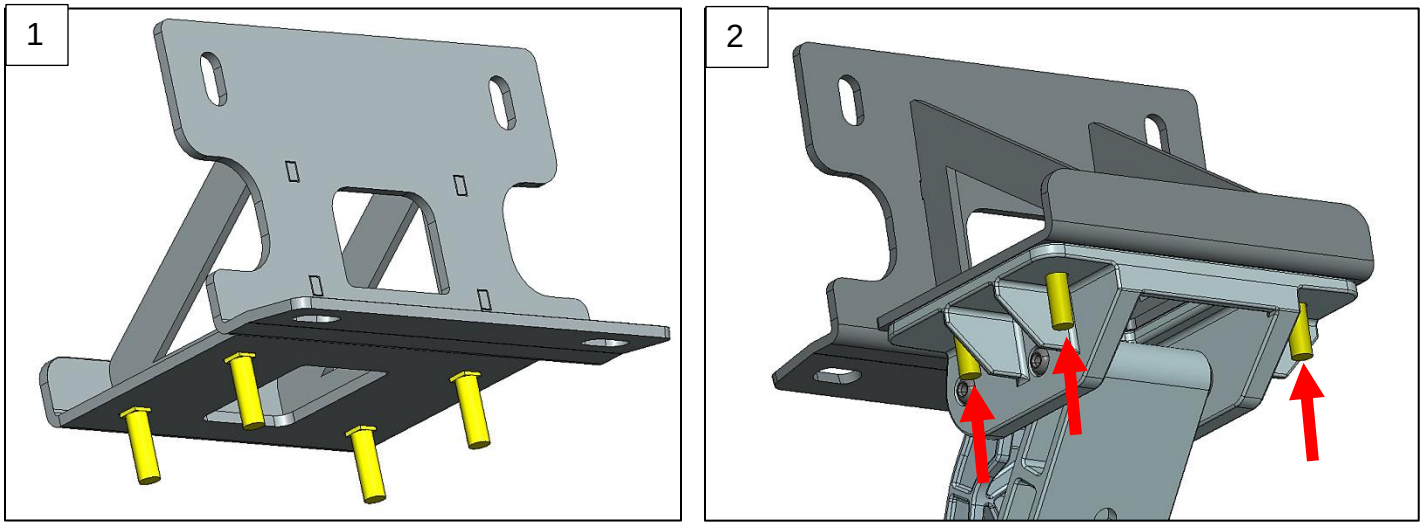

BODYARMOR4X4.COM
CALL US: 951.808.0750
ORDERS@BODYARMOR4X4.COM

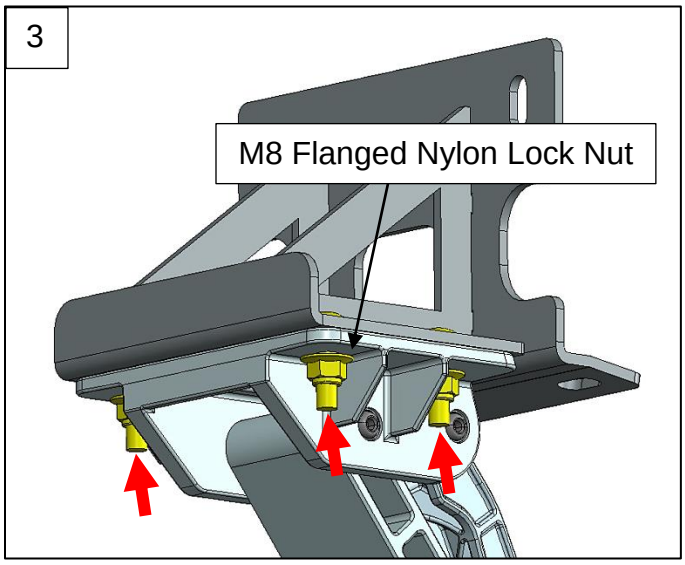

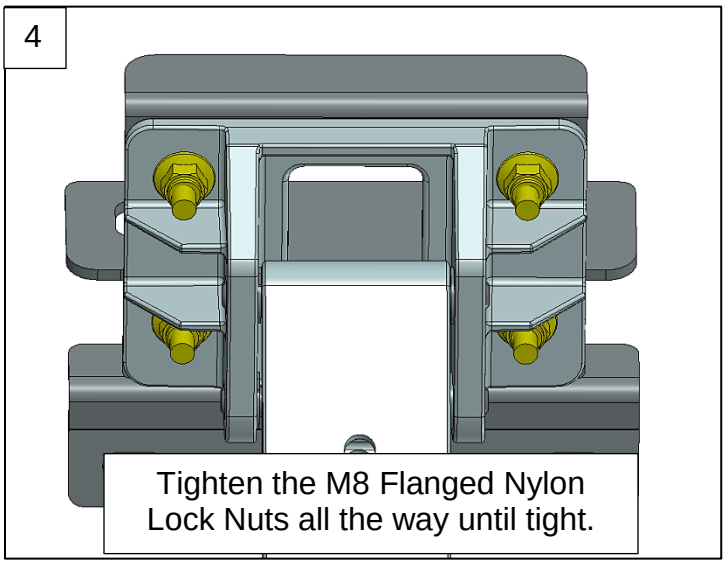

3

Locate and Line up front mounting bracket slots to the rocker panel threaded inserts and place Driver Side/Left Front Bracket Assembly (A) onto rocker panel. Then fasten 8mm Bolts, Lock Washers, and Flat Washers together into the OE inserts and 8mm Hex Nut to the Bolt Plate. Do not tighten all the way yet.

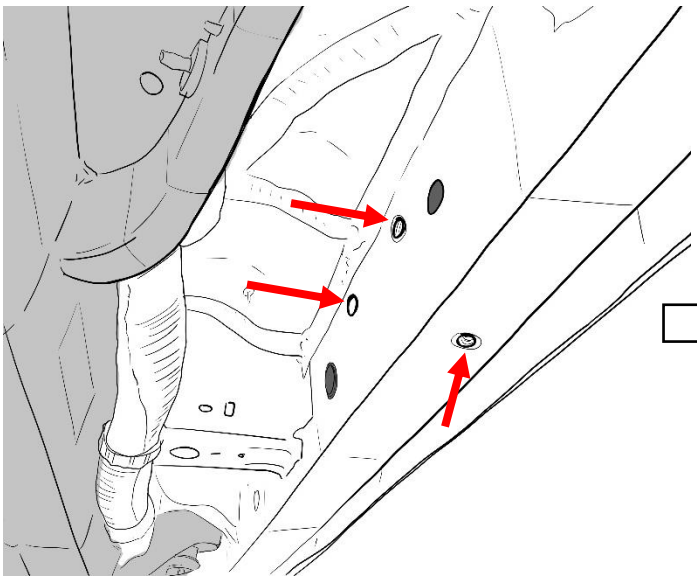

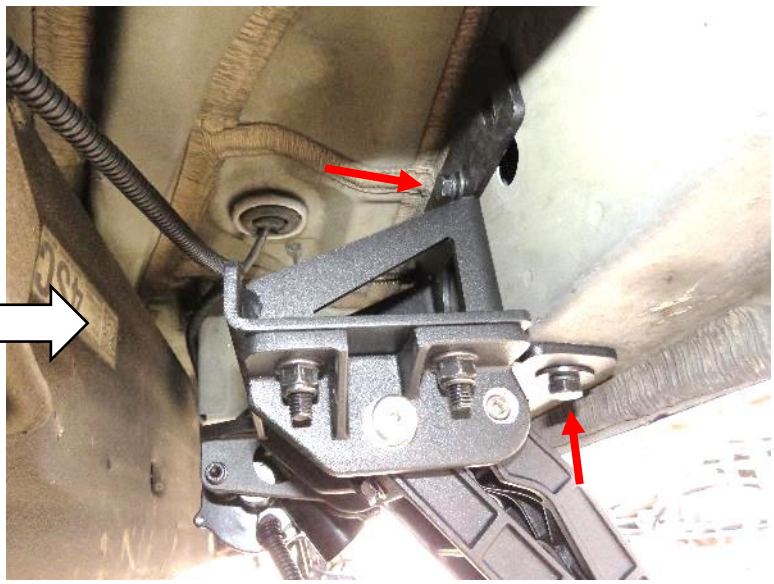

BODYARMOR4X4.COM
CALL US: 951.808.0750
ORDERS@BODYARMOR4X4.COM



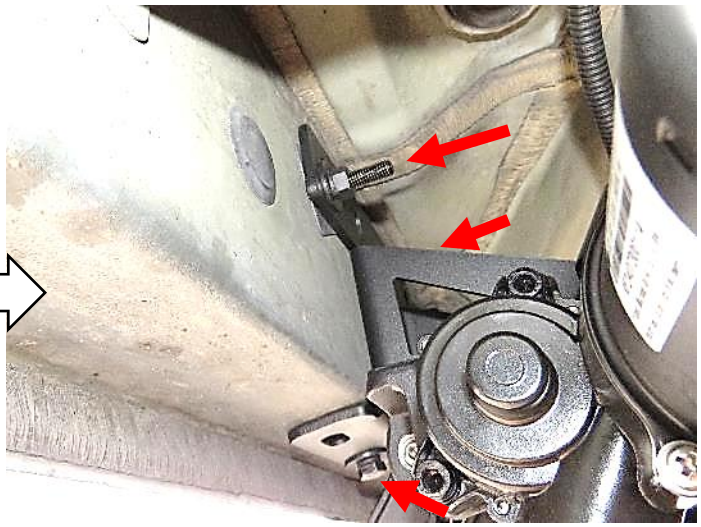

After all 3 mounting points are used, it should look like this:



Front bracket assembly fully assembled

For attaching the motorized linkage to the front bracket, please see step 4 for more details.

BODYARMOR4X4.COM
CALL US: 951.808.0750
ORDERS@BODYARMOR4X4.COM

4

Locate rear mounting points. Check that the appropriate plastic OE insert protectors are removed and reveal the threaded inserts. Next, line up rear mounting bracket slots to the studs and place Driver Side/Left Rear Bracket Assembly (B) onto rocker panel. Remove any rubber plugs that may get in the way of the bracket.

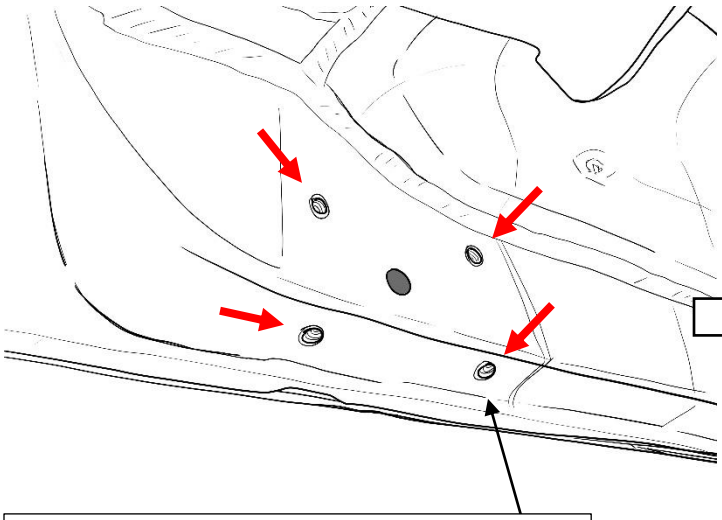



*Note: The more forward pair of inserts are additional mounting points. Not all vehicles have these. On vehicles with these inserts available, be sure to use them for extra additional strength. On vehicles without these threaded inserts, use just the rearward 2 mounting points.



If these threaded holes are present on the rocker panel, go ahead and use them for additional strength

For attaching the idler linkage to the rear bracket, please see step 4 for more details.

Then fasten the 8mm bolts (K), lock washers (L), and flat washers (H) into. Do not tighten all the way yet.

BODYARMOR4X4.COM
CALL US: 951.808.0750
ORDERS@BODYARMOR4X4.COM

5

Adjustments may be needed afterwards.

Repeat steps 1 – 4 for the Passenger Side.

On some vehicles, the Passenger Side has large wire conduits running the length of the vehicle frame. These wire harnesses are bendable and can be simply pushed aside when installing the Passenger Side Bracket Assemblies (C & D).

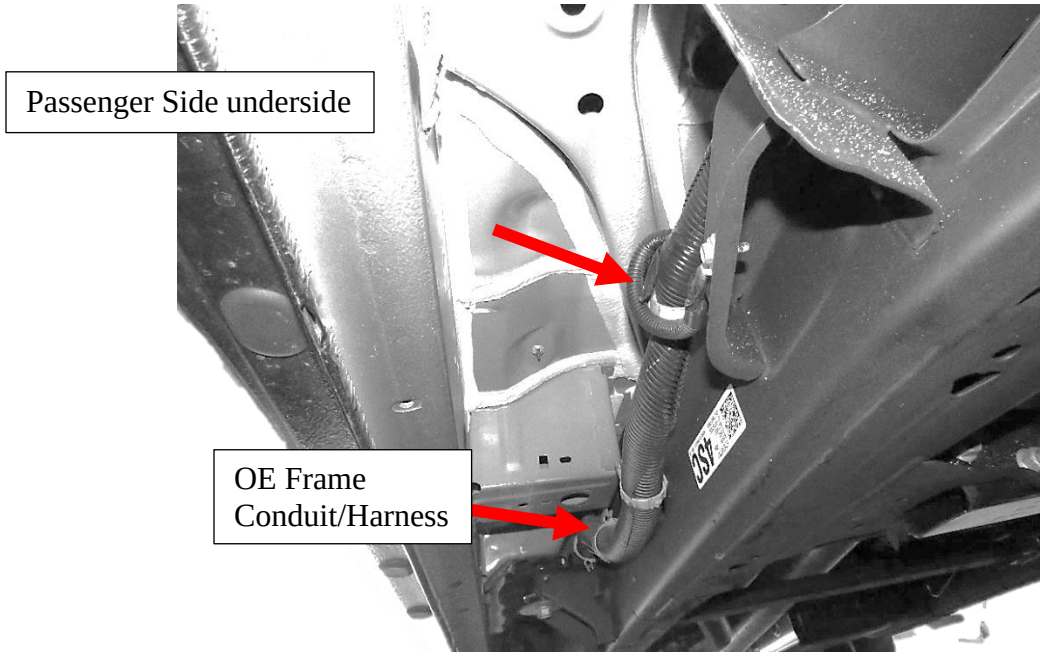

In some cases, foam strips may be applied to the top of the brackets in areas that will touch the OE frame conduit. In most cases, the brackets will not touch.

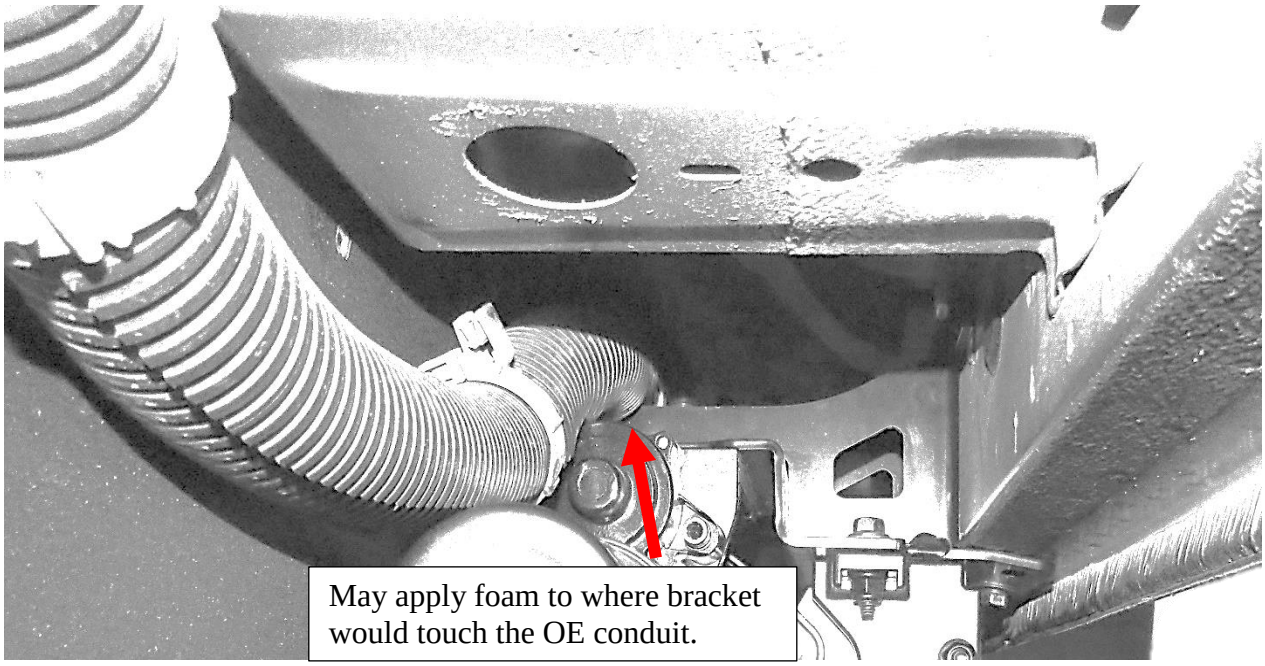

BODYARMOR4X4.COM
CALL US: 951.808.0750
ORDERS@BODYARMOR4X4.COM

6

Start from the engine compartment by opening the front hood of the vehicle. Remove the 25A fuse from the fuse box that comes with the main harness (M).

*WARNING: Keeping the fuse connected to the fuse box may result in electrical sparks and risk of shorting when working with the battery.

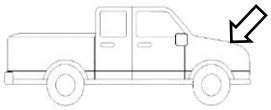

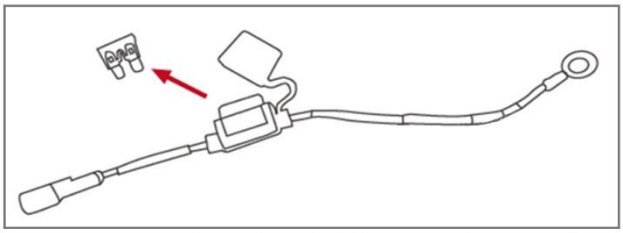

Open fuse holder cap and remove fuse

7

Connect the positive power lead on the main harness (M) to the positive battery terminal. Connect the negative lead to the negative battery terminal. Make sure both power leads are fully secured. Connect the ECU (P) to the main harness.
Connect the Long LED Y-Harness (N1) To the Driver-side branch of the main harness.
Connect the Short LED Y-Harness (N2) to the Passenger-side branch of the main harness.

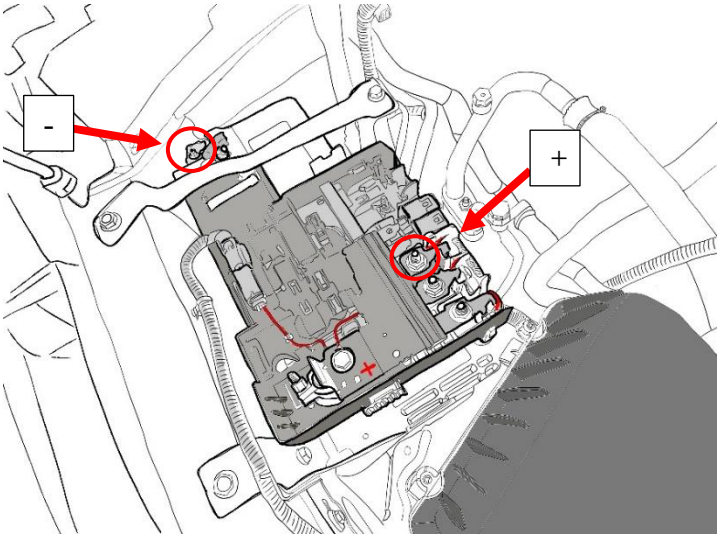

BODYARMOR4X4.COM
CALL US: 951.808.0750
ORDERS@BODYARMOR4X4.COM

8 Route the main harness (M) around the battery, up along the rear of the engine compartment, and down the Driver-side wheel well. Route the shorter leg of the harness down the Passenger-side wheel well. **Be sure to avoid contact with any moving or hot engine components.** Attach and secure the main harness (M) with supplied cable ties.

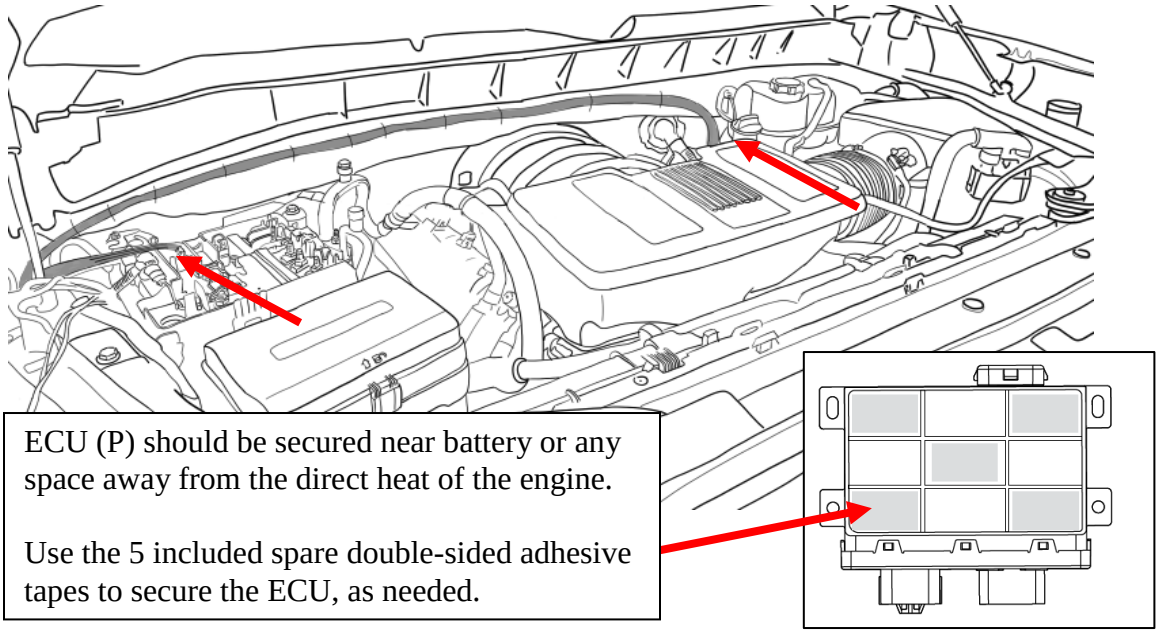

ECU (P) should be secured near battery or any space away from the direct heat of the engine.

Use the 5 included spare double-sided adhesive tapes to secure the ECU, as needed.

CAUTION: CHECK and ENSURE your vehicle model year and trim are correct before proceeding!

Proceed only if your truck has post-refresh new body styling!

Example of Post-2022 Refresh Styling



Enclosed Sideburn on 1500 = NEW body styling

✓

Correct Model Year and styling.

BODYARMOR4X4.COM
CALL US: 951.808.0750
ORDERS@BODYARMOR4X4.COM

Example of Pre-2022 Legacy Styling



Exposed Sideburn on 1500 = OLD body styling

Incorrect Model Year and styling.

Please scan for video explanation on how to find CAN wires

If you are unsure of your model year, check the VIN number or the manufacturer sticker on the body behind the front driver door. If you have the wrong version, contact the manufacturer.

BODYARMOR4X4.COM
CALL US: 951.808.0750
ORDERS@BODYARMOR4X4.COM

8

If the vehicle is a Silverado 1500 from 2022 onwards or a Silverado 2500/3500 from 2024 onwards, route the signal branch of the main harness (M) through the Passenger side instead of the Driver Side. Poke a hole using a drill or punch through the plastic cap on the underside to feed the wires into the cabin.





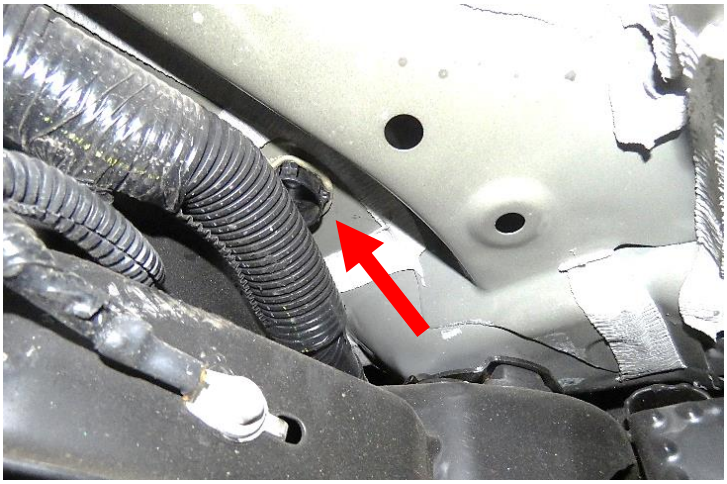

BODYARMOR4X4.COM
CALL US: 951.808.0750
ORDERS@BODYARMOR4X4.COM

9 Attach the main harness (M) to the LED Y-Harness (N). Then attach the LED Y-Harness (N) to the motor on the Driver Side. Repeat for Passenger Side. The shorter LED Y-Harness should connect to the motor that is on the same side as the ECU.



Driver side

10 Under the glove compartment on the Passenger Side, locate the rectangular radio module. On some models, the underside felt panel may have to be removed to access the components below the glove compartment.

1



Please scan for video explanation

2

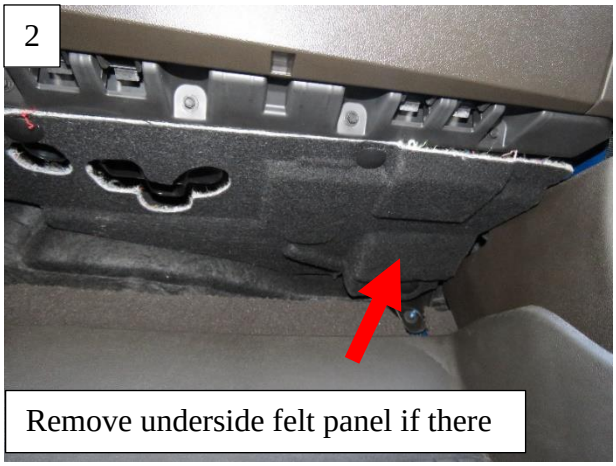

Remove underside felt panel if there

3

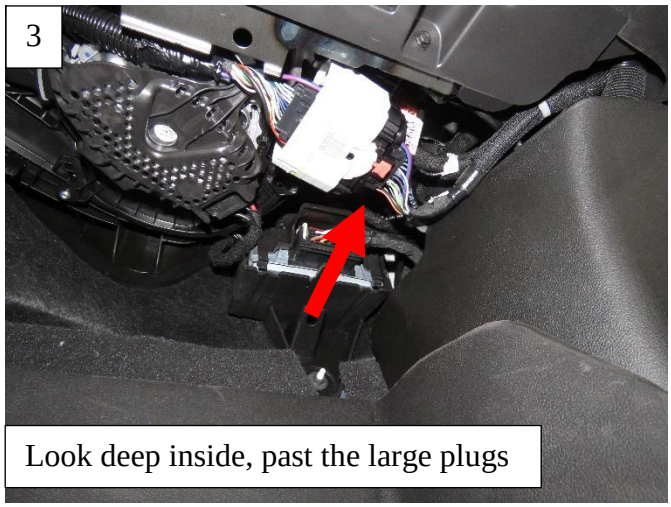

Look deep inside, past the large plugs

4

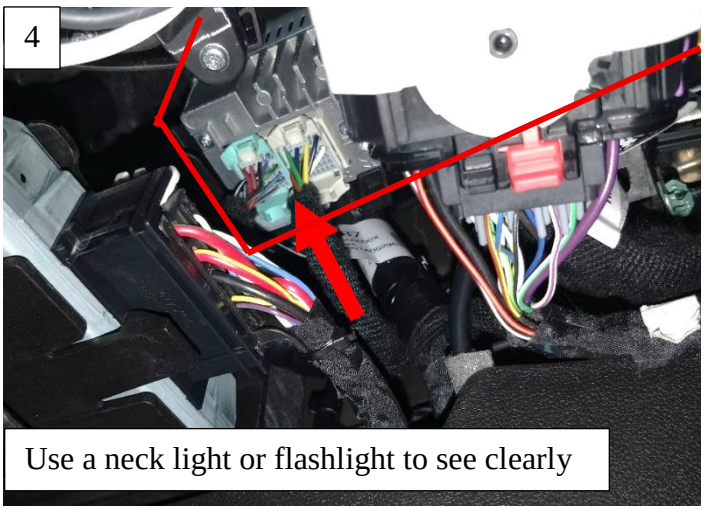

Use a neck light or flashlight to see clearly

BODYARMOR4X4.COM
CALL US: 951.808.0750
ORDERS@BODYARMOR4X4.COM

Determine the color of the plugs on the radio module by looking at the outer color of the two main connectors that are plugged in.

If your radio has a **GREEN and GREY plug**, then follow **step B-1 on page 17-18**.

If your radio has a **BLACK and GREY plug**, follow **step B-2 on page 19**.

Green and Grey: Go to Step B-1 on page 11



Grey and Black: Go to Step B-2 on page 12



Part B-1:

Ensure your vehicle is off, and then unplug the Green Connector. Connect the High and Low wires from the main harness (M) using the supplied wire taps (O). After successfully connecting the wires, return the module back into its place, tighten the previously removed nuts, and check that it is secure on the bracket.

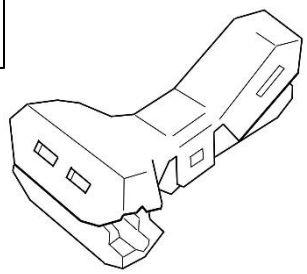

NOTE: Wire taps supplied with kit. Please see page 13 for guide.

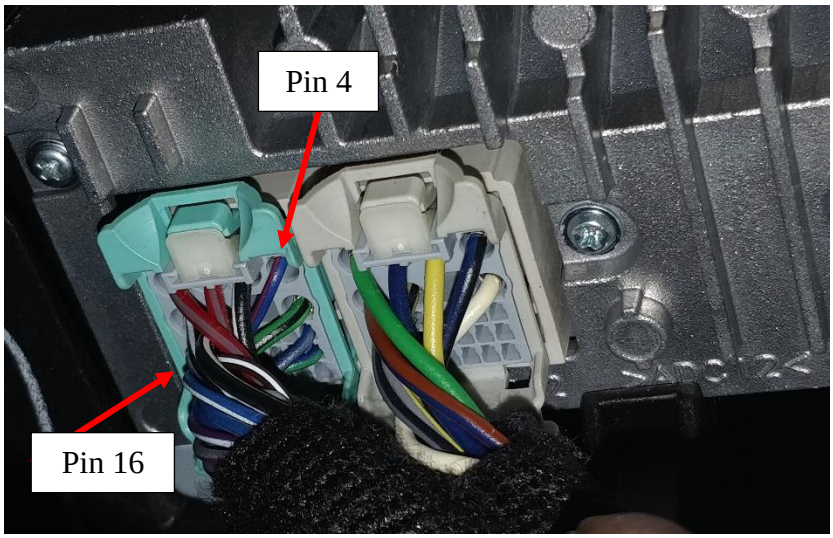

*NOTE: On some vehicles, the positions of the Green and Grey plugs may be reversed.

BODYARMOR4X4.COM
CALL US: 951.808.0750
ORDERS@BODYARMOR4X4.COM

Factory CAN Wire	Main Harness wire color
Blue w/ White Stripe (CAN-H)	White (High)
Blue w/ Yellow Stripe (CAN-L)	Yellow (Low)

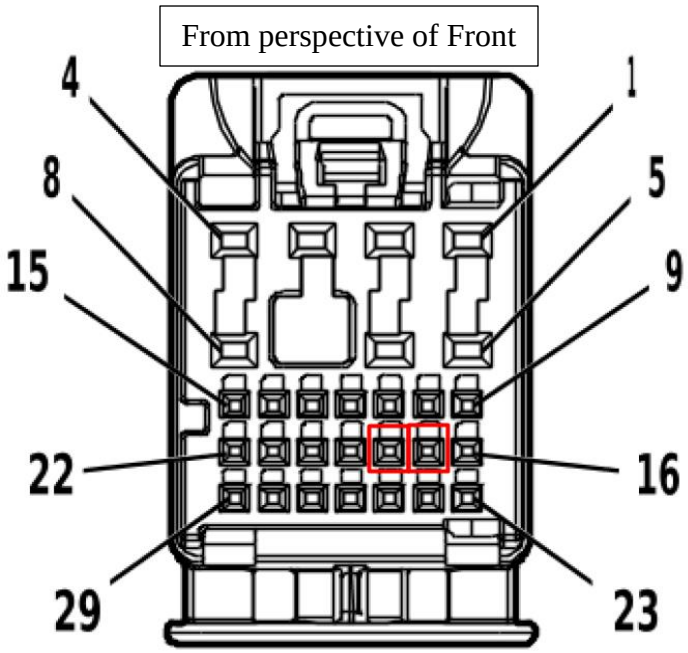

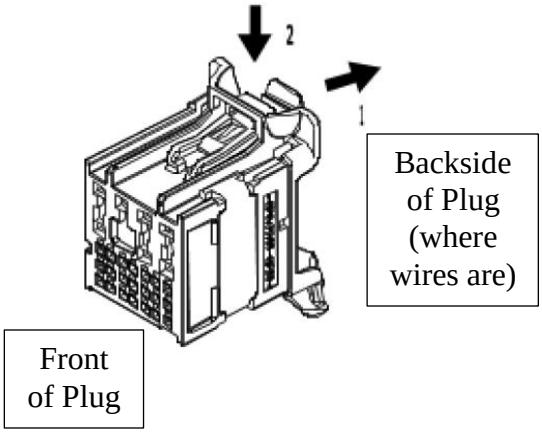

Pin 17 = High

Pin 18 = Low

After successfully connecting the wires, return the module back into its place, tighten the previously removed nuts, and check that it is secure on the bracket.

BODYARMOR4X4.COM
CALL US: 951.808.0750
ORDERS@BODYARMOR4X4.COM

Part B-2:
Ensure your vehicle is off, and then unplug the Green Connector. Connect the High and Low wires from the main harness (M) using the supplied wire taps (O). After successfully connecting the wires, return the module back into its place, tighten the previously removed nuts, and check that it is secure on the bracket.

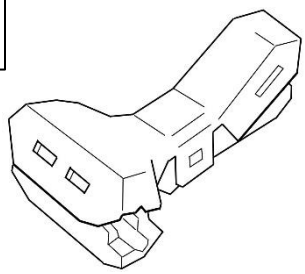

NOTE: Wire taps supplied with kit. Please see page 13 for guide.

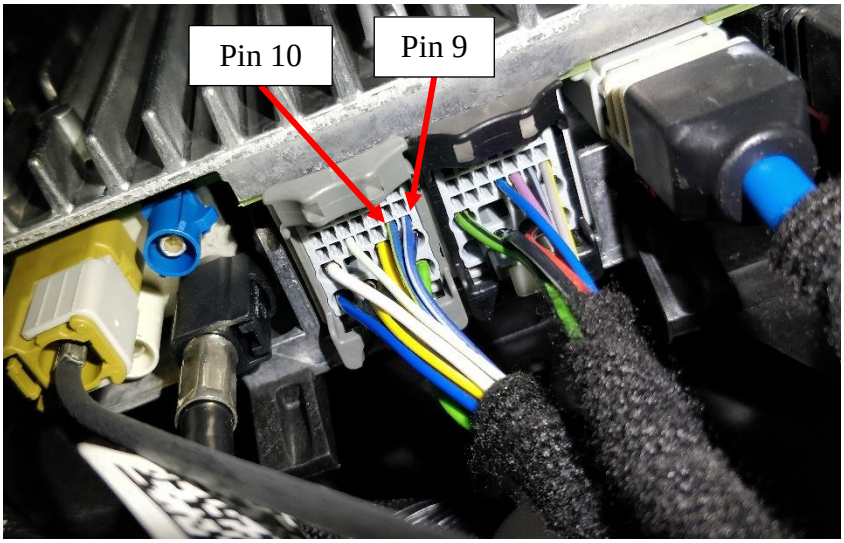

Factory CAN Wire	Main Harness wire color
Blue w/ White Stripe (CAN-H)	White (High)
Blue w/ Yellow Stripe (CAN-L)	Yellow (Low)

*NOTE: On some vehicles, the positions of the Black and Grey plugs may be reversed.

From perspective of Front

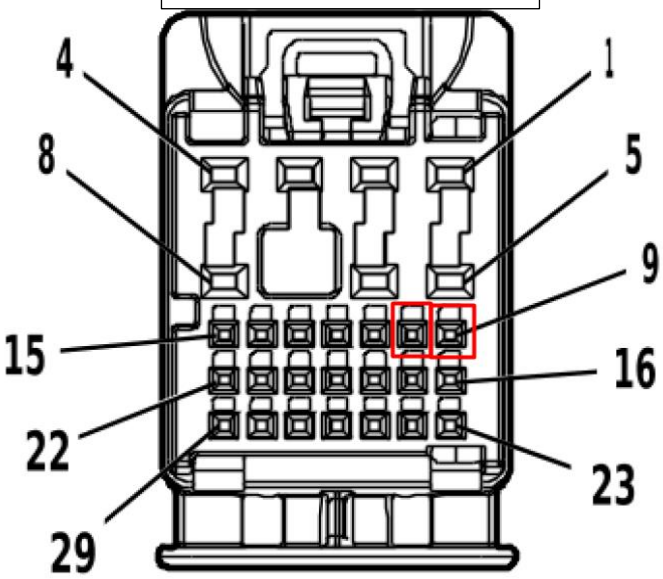

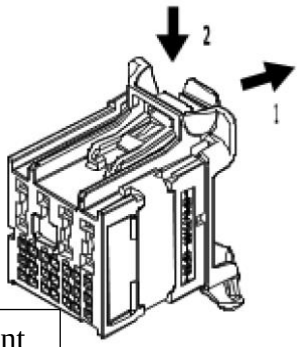

Backside of Plug (where wires are)

Front of Plug

Pin 9 = High

Pin 10 = Low

BODYARMOR4X4.COM
CALL US: 951.808.0750
ORDERS@BODYARMOR4X4.COM

After successfully connecting the wires, return the module back into its place, tighten the previously removed nuts, and check that it is secure on the bracket.

The kit comes supplied with wire taps called “shark taps”. Follow the guide below to tap the wire using the “shark tap”:

1 Take wider end and wrap jaws onto vehicle data line.

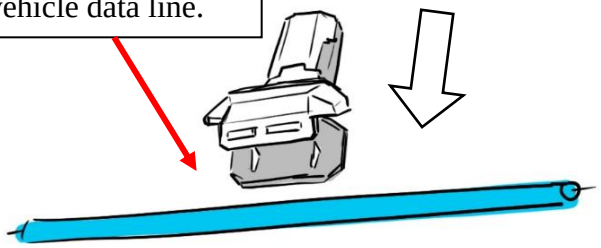

2 Clamp jaws onto wire tightly.

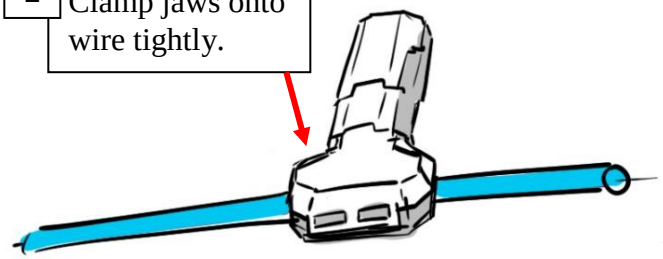

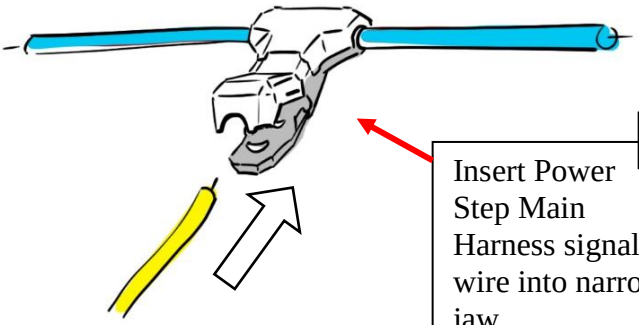

3 Insert Power Step Main Harness signal wire into narrow jaw.

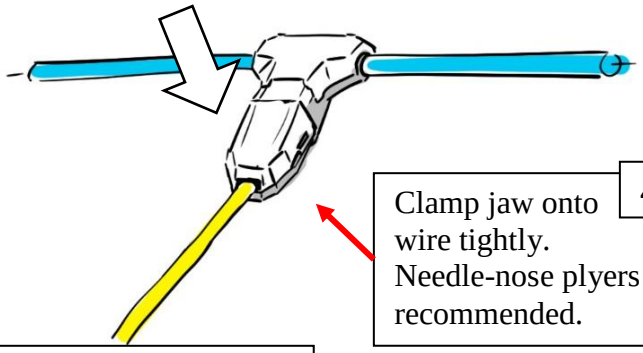

4 Clamp jaw onto wire tightly. Needle-nose plyers recommended.

NOTE: Make sure wire is seated properly in the jaws before clamping. The wire being tapped must be centered on the “teeth” to make a proper tap.

Demonstration:

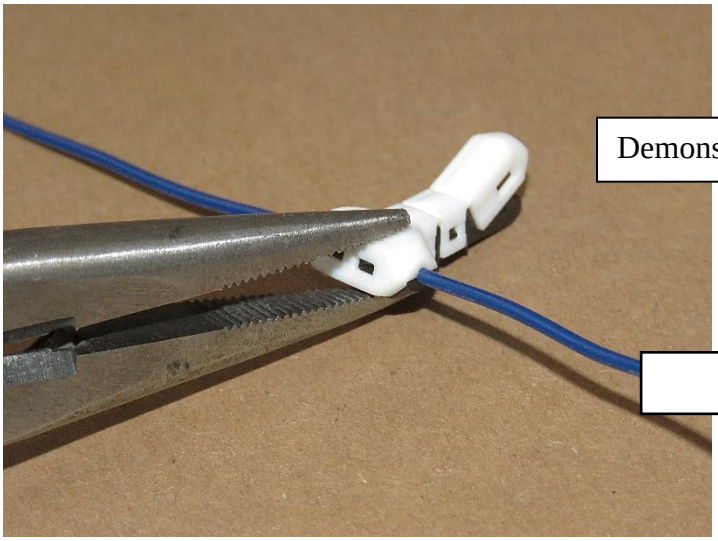

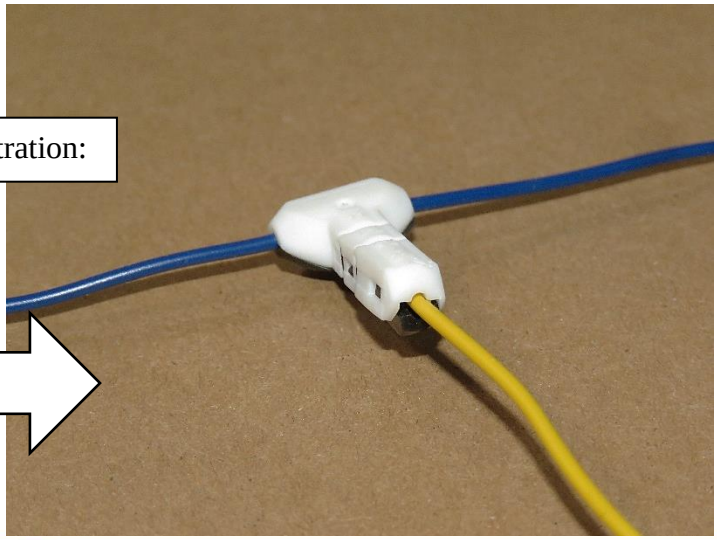

BODYARMOR4X4.COM
CALL US: 951.808.0750
ORDERS@BODYARMOR4X4.COM

11 Plug in LED lights (Q) into LED Y-Harness (N) and attach them to the bottom of the rocker panel. Use provided 3M double sided adhesive tape on back of LED light (Q). Replace Fuse into Fuse Box.

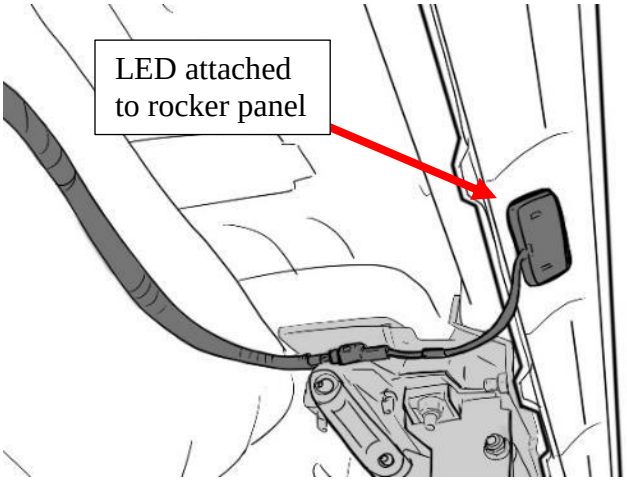

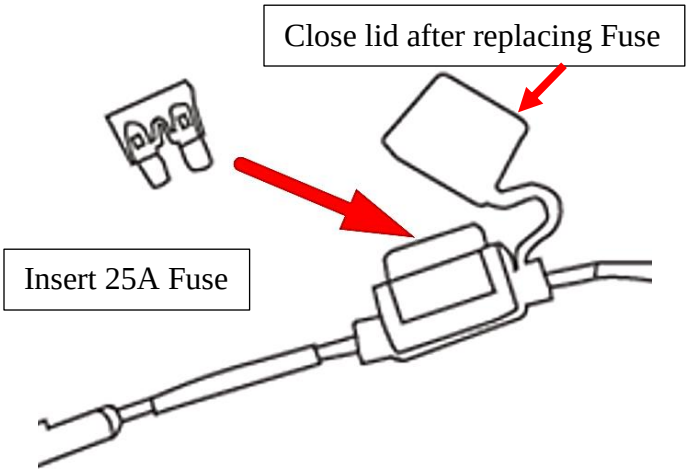

12 Check to make sure the harnesses on the Driver Side/Left Front Bracket Assembly (A) and Passenger Side Front Bracket Assembly (C) are connected to the main harness (M) via the LED-Y harnesses (N).

*NOTE: The linkage arms on the front bracket assemblies will not move unless both motors are connected.

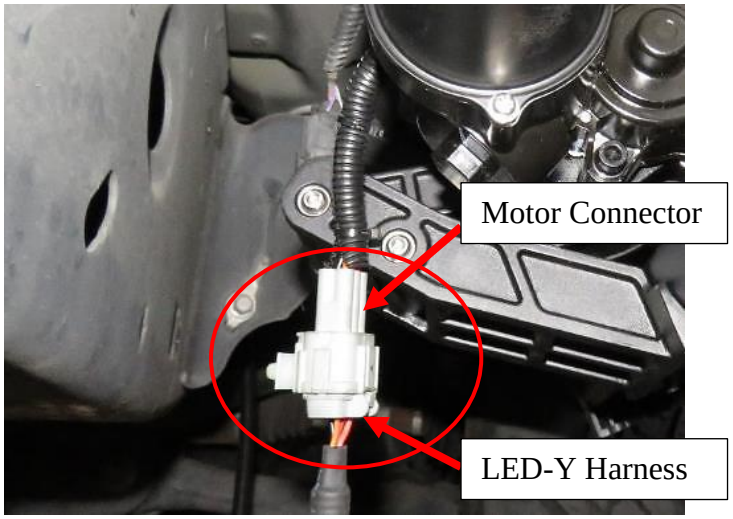

13 Seal the grommet with RTV Silicone Sealant.

Hide wires and reattach the kick panel with the carpet fully unfurled in its original position. Reattach the door sill panel and check to make sure there are no obstructions or potential snag points around the brake pedal area.

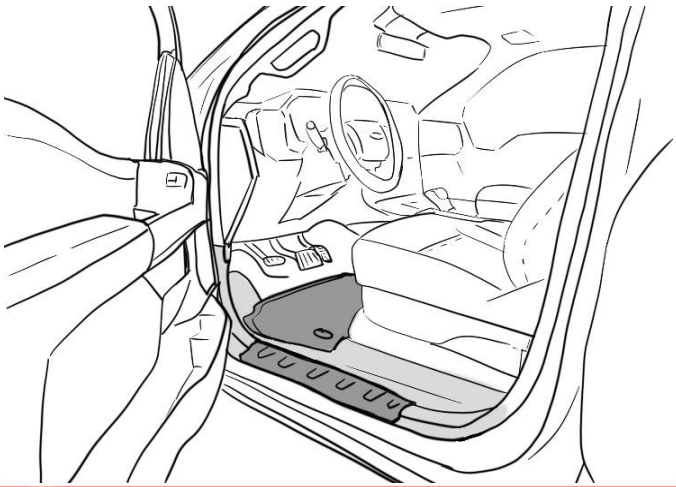

BODYARMOR4X4.COM
CALL US: 951.808.0750
ORDERS@BODYARMOR4X4.COM

14 Prepare the power step boards. Locate the end of the boards and slide the M6 Carriage Bolts (E) into the channel on the underside of the board. Insert a total of 8 carriage bolts (E).

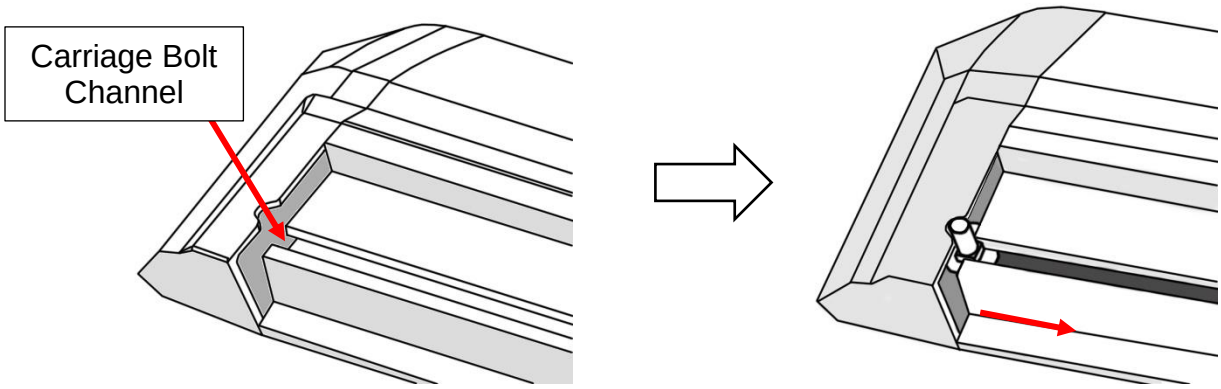

Use the notch in the board's end caps to feed the bolts into the channel.

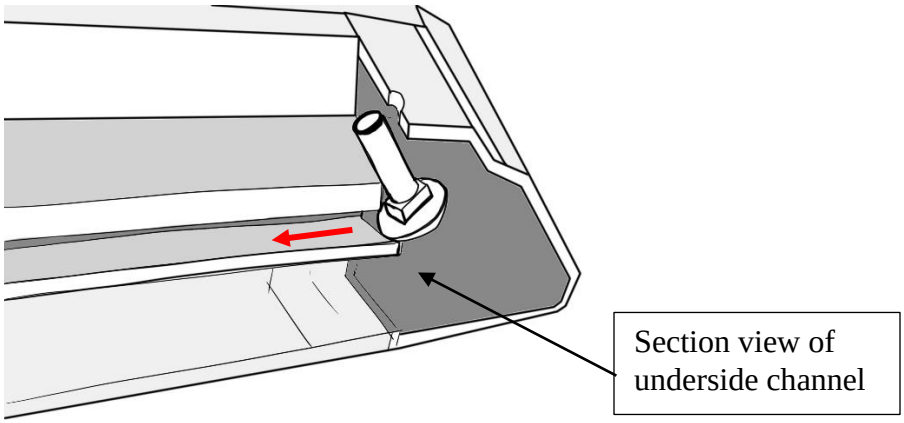

15 Perform a function check by closing the driver side front door and opening it again. The front bracket assembly (A) motor should activate the linkage arm and move it into the down or "deployed" position.

After deploying linkage arms, unplug the motor connector from the LED-Y harness (to cut power to the linkage arms), while front door is open, to hold deployed position for running board installation.

BODYARMOR4X4.COM
CALL US: 951.808.0750
ORDERS@BODYARMOR4X4.COM

Line up the carriage bolts (E), under the power step boards, with the slots on the linkage arms (A & B). Insert the 8 carriage bolts (E) into the slots on front and rear linkage arms. Adjust board to desired position. Moderately hand tighten the 6mm Flat Washers + 6mm Nylon Lock Nuts (G) onto the carriage bolts.

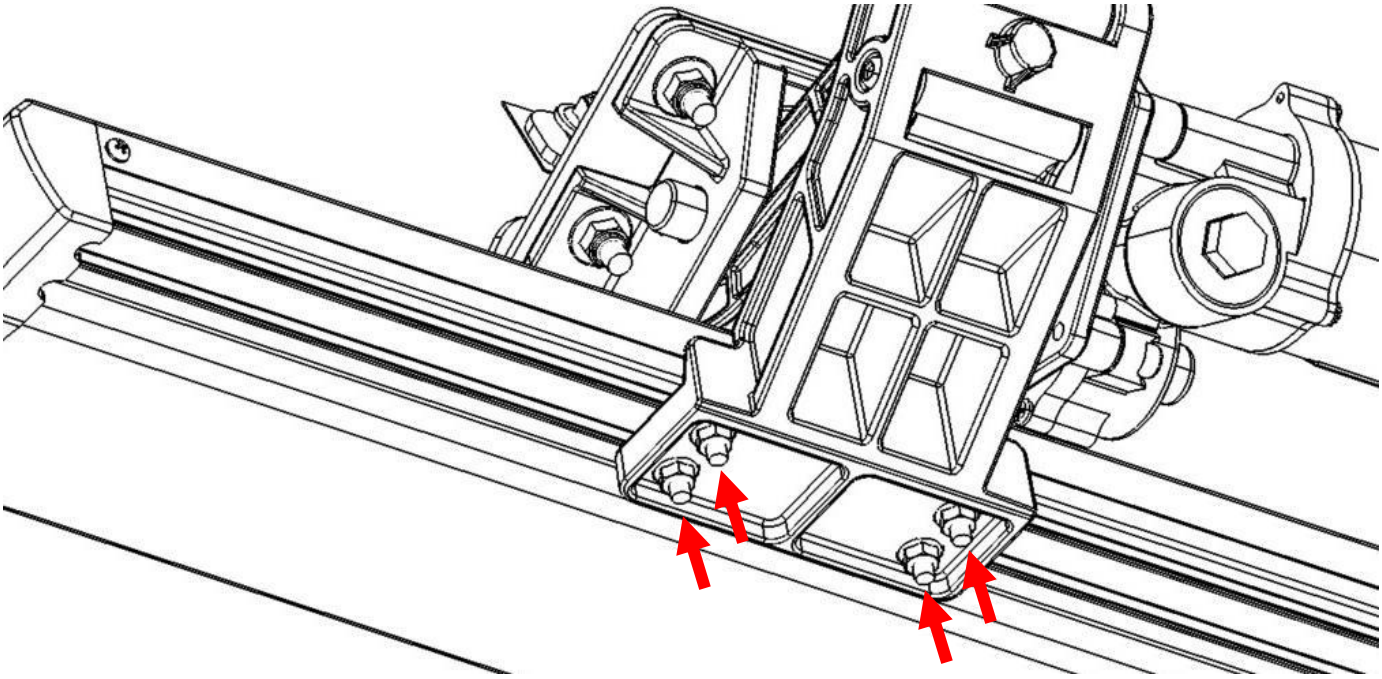

Once the board is adjusted, plug in motor connector to the LED-Y harness (to return power to the linkage arms), making sure that the door remains open. Proceed to open and close doors several times to deploy and retract the steps to settle the steps into their natural alignment. After cycling the step, tighten all hardware on the board and brackets.

Some further adjustment may be required for desired step position. Repeat for passenger side.

16

Perform system check and troubleshooting. If board is making irregular movements or noise, readjust the boards as follows:

a) With board deployed loosen 6mm nuts under board.

b) Leave the nuts slightly less than snug.

c) Open and close door several times for board to settle into position.

d) With the step in the deployed position, gradually tighten the nuts while alternating between each. Do not over tighten.

If board is making abnormal noise or the motion is binding, repeat steps “a” through “d”.

BODYARMOR4X4.COM
CALL US: 951.808.0750
ORDERS@BODYARMOR4X4.COM

17

Note: If the above method does not resolve the issue, the brackets mounting to the vehicle may not be aligned properly with the vehicle. In this case, remove the board and realign brackets before attempting steps “a” to “d” once again.

Reinstall any remaining trim panels if necessary. Check and make sure all hardware is fully tightened. Perform a final system check. Finish.

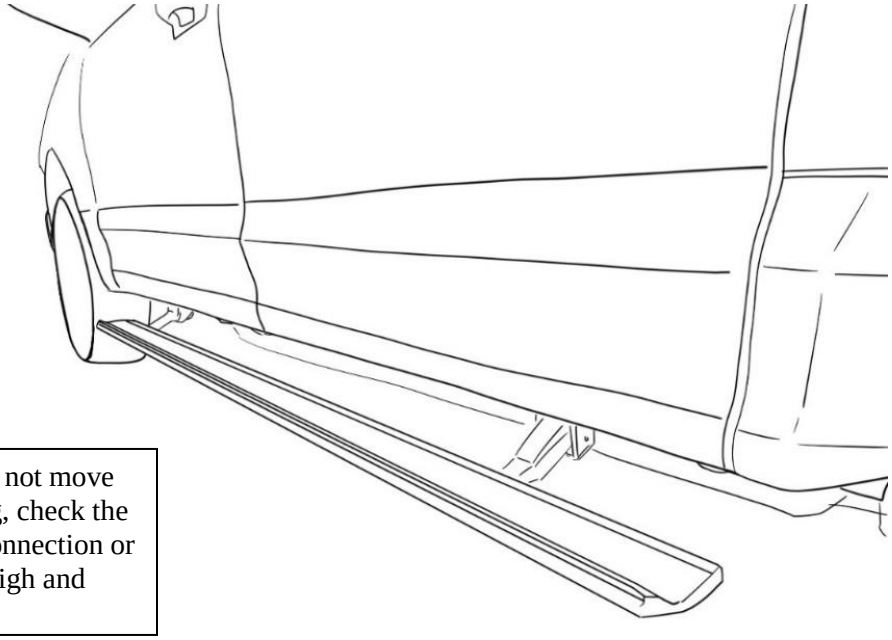

*NOTE: If board does not move during troubleshooting, check the wire taps for a solid connection or flip the CAN Signal High and Low wires.

*NOTE: If board still does not move during troubleshooting, it may also be necessary to check all other wiring connections.

Toggle Switch Optional Accessory

If you purchased the toggle switch accessory, please refer to the detailed instruction sheet included with the toggle switch kit.

FINAL REMARKS

- Ensure there are no debris or obstacles preventing the power steps from operating.
- Open and close each door on both sides to ensure that power steps are operating correctly.

BODYARMOR4X4.COM
CALL US: 951.808.0750
ORDERS@BODYARMOR4X4.COM

- Check and ensure that all electrical connections are stable and secure.
- Check and ensure that the fuse is placed into the main harness.
- Check and ensure that the CAN tap connections are fully engaged and are seated completely.
- Recheck that all mounting hardware is tight.
- Adjust mounting brackets or running board to enable smooth operation even after having stepped on the deployed boards.

MAINTENANCE AND CARE

- Periodically clean the linkage arms and motor of any dirt or debris that may accumulate.
- Avoid spraying the motors directly with high pressure liquids.
- Avoid damaging the power steps.
- Ensure power step ECU is not exposed directly to water to prevent degradation.
- Ensure wiring is properly tucked away and concealed from mechanically moving parts and exposure to high heat or very low temperature conditions.
- Periodically recheck that all mounting hardware is tight
- Do not overload the running board.
- Readjust running board if necessary.

WARNING AND SAFETY

- Do not use boards as a rock slider or as skid protection.
- Do not use solvents, chemicals, oils, or corrosive liquids on power steps. If the power steps encounter these substances, clean the power steps as soon as possible. Mild detergent and water is recommended.
- Do not obstruct the power steps in any way during operations of deployment and retraction.
- Do not rely in any way on the components of this product to keep occupants within the vehicle or to protect against injury or death in the event of an accident.
- Do not sit/stand on the running board for long periods of time.
- Do not jump on power step board or rest heavy objects on boards or subject power steps to excessive force.
- Do not step on plastic end caps of the boards. Failure to do so may result in injury.
- Do not place bodily appendages between running board and the vehicle body. Please mind the gap between the vehicle and the board.
- Do not allow children to use power steps without adult supervision and proper operation. This is not a toy. Improper use may result in injury.
- Remove the fuse on the power lead on the main harness before doing electrical troubleshooting to avoid risk of shock or injury. Make sure the motors do not have power before working on mechanical adjustments to avoid injury.

BODYARMOR4X4.COM
CALL US: 951.808.0750
ORDERS@BODYARMOR4X4.COM