END SHORE

TABULATED DATA
Effective May 20th, 2024

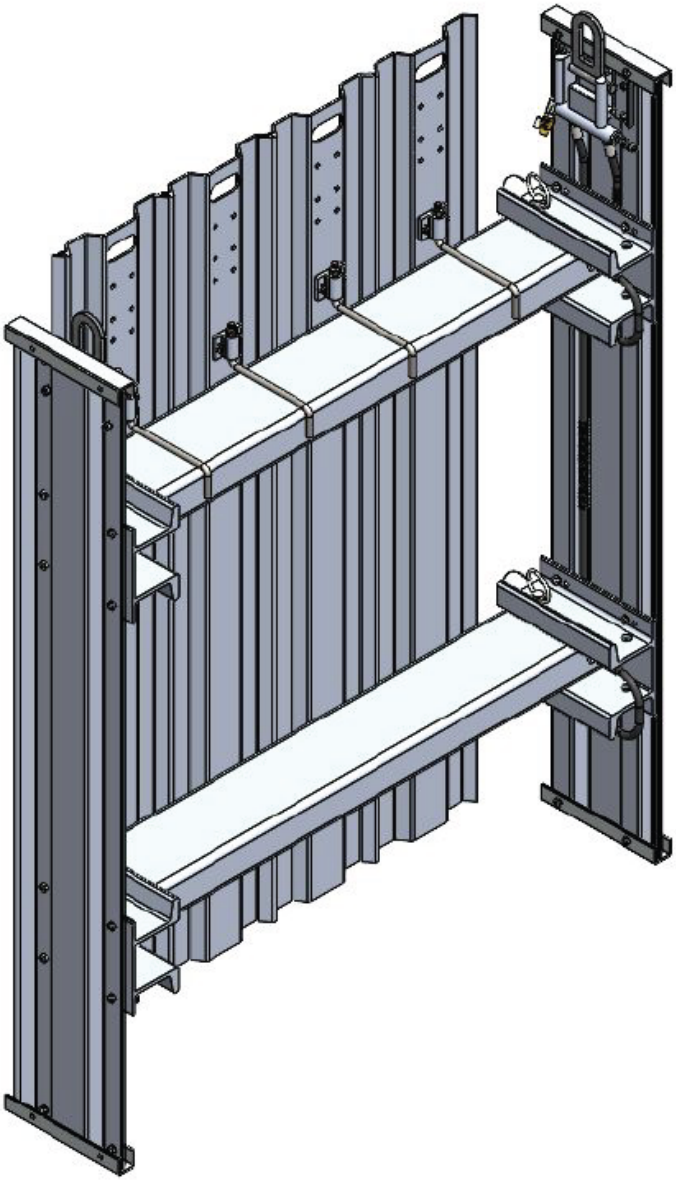

LICENSED PROFESSIONAL ENGINEER
JOE M TURNER
C 37334
CIVIL
STATE OF CALIFORNIA

Signed on: 5-20-2024

Contents

Contents 2
Description 2
General Information for use of Pacific Shoring End Shore 2
Classification of Soil Types 4
Allowable Sheeting 4
End Shore Panel Properties 5
Hydraulic End Shore Configurations 6
Hydraulic End Shore General Usage 7
Hydraulic End Shore Allowable Depths 8
End Shore Systems Installation and Removal 9
Safe Handling and Use of End Shore System 9

Description

The Pacific Shoring Products End Shore is an aluminum hydraulic shoring system designed specifically for protecting workers at the ends of trench and pit excavations. The End Shore is designed to work in trenches from 4 ft. to 20 ft. deep and 2 ft. wide to 12 ft. wide. Corrugated sheeting is set behind the shore against the trench end wall to prevent trench end wall collapse and raveling.

The End Shore must be used in conjunction with independent linear shoring systems or an adequate shoring system that protect the trench walls.

General Information for use of Pacific Shoring End Shore

1.1 The End Shore tabulated is compliant with requirements of Federal OSHA 29CFR, Part 1926, Subpart P-Excavations and Trenches

> **1926.652(c)(2)**-Option (2) - Designs Using Manufacturer's Tabulated Data.
> 1926.652(c)(2)(i) -Design of support systems, shield systems, or other protective systems that are drawn from manufacturer's tabulated data shall be in accordance with all specifications, recommendations, and limitations issued or made by the manufacturer.

All provisions of Subpart P apply when utilizing this tabulated data. The contractor's competent person shall use this data to select allowable End Shore configuration. The competent person utilizing this tabulated data shall be experienced and knowledgeable of all requirements of Subpart P, and trained in the use and safety procedures for trench and pit shoring applications.

1.2 An adequate separately designed shoring system shall be used leading up to within 4 ft. of the End Shore shoring application. Systems such as Timber, Vertical Hydraulic Shores, Waler Systems, Shoring Shields, and designs by an engineer may be used in conjunction with the End Shore.

1.3 Use of this tabulated data is dependent on first classifying the soil in accordance with OSHA Appendix A, Soil Classification. Classification shall be just prior to installing the End Shore. Soil conditions may change at a later date and require revaluation of the strength and allowable depth.

1.4 End Shores are tabulated based on the effect of a 20,000 lb surcharge load set back 2 ft. from the edge of the trench and the equivalent weight effect of the OSHA soil type, see classification of soil types, 2.2.

1.5 The depth and spacing given in Tables 4 governs the use of Pacific Shoring End Shore and not tabulations given by other manufacturers. This Tabulated data applies to End Shores manufactured by Pacific Shoring. Any alterations to the shores or variance from this tabulated data shall be indicated in a site-specific plan prepared and approved by a registered engineer.

1.6 The faces of the end and corner of the excavations shall be vertical and the end wall shall be within 6" of the sheeting. If the soil face is greater than 6" backfill the void with excavated soil or crushed rock.

1.7 End Shores may be stacked, provided the vertical spacing does not exceed 4 ft.

1.8 End Shores shall be installed and removed from outside the trench, see installation and removal procedure.

1.9 The competent person shall continually monitor the shored excavation for changed conditions such as water seepage, soil movement cracks at the surface, sloughing or raveling, proper surcharge load weight greater than 20,000 lbs and setback a minimum of 2 ft. that may damage the shores.

1.10 Workers shall always enter, exit, and work inside the shored area of the trench.

1.11 End Shores may be set a maximum of 2 ft. from centerline of the power strut to the bottom of the excavation. The trench depth is considered the full distance to the bottom of the excavation.

1.12 Plywood sheeting used with End Shores shall be in accordance with Table 1. Plywood shall not be used in C-60 or C-80 soil below 10 ft. deep. This applies to end sheeting only.

1.13 Acceptable metal sheeting is;

- Pacific Shoring Products Corrugated Aluminum sheeting or and aluminum sheeting with a minimum section modulus of 1.13 in^3
- Steel sheeting with a minimum section modulus of 1.13 in^3 such as ¾" plate or sheet piles.

1.14 Sheeting must extend to the top of the excavation. Sheeting may be held a maximum of 2 ft. off the bottom of the excavation.

1.15 Pressurize the End Shore hydraulics to a minimum of 1000 psi.

Classification of Soil Types

2.1 Soil classification shall be in accordance with OSHA Appendix A and classified just prior to installing Hydraulic End Shore Systems.

2.2 The equivalent weight of OSHA soil types* is assumed to be as follows:

- OSHA Type "A" Soil 25 PSF per ft of depth
- OSHA Type "B" Soil 45 PSF per ft of depth
- Type "C-60" Soil 60 PSF per ft of depth**
- OSHA Type "C" Soil 80 PSF per ft of depth

* These equivalent weights were adapted from OSHA 1926 Subpart P App C, Timber Shoring for Trenches, Tables C-1.1, C-1.2, and C-1.3

** Type C-60 soil is not identified or classified in OSHA Appendix A

2.2 Type C-60 soil is soil that does not qualify as OSHA Type A, or Type B, can be cut with vertical walls and will stand up long enough to safely insert and pressurize the hydraulic shore.

Allowable Sheeting

Acceptable sheeting to be used in conjunction with End Shore Systems is as follows.

Notes

- The side walls and end walls of the excavations shall be cut near vertical to allow proper installation of End Shore Systems.
- The end walls shall be within 6" of the sheeting and the sheeting shall be secured with brackets.
- If the soil face is greater than 6" backfill the void at least 2/3 of its height with excavated soil or crushed rock securing the sheeting. Intermittent gaps directly behind the sheeting and the soil shall not exceed 6".

Table 1: Allowable Sheeting for End Shore Systems
Material
Two sheets of 3/4" thick CDX Plywood placed back-to-back
1 1/8" thick CDX Plywood
3/4" thick 14 ply Arctic White Birch (Finland Form)
3/4" thick Plyform - APA B-B Class I Exterior
3/4" thick Combi Exterior Plywood
3/4" thick HDO-American Plywood Association, high density overlay exterior
3/4" thick Omni Form
Pacific Shoring Products Aluminum Sheeting
Timber Lagging, Douglas Fir # 1, S4S Nominal Dimension, 1 1/2" x 7 1/2" and 2 1/2" x 7 1/2"
Timber Lagging, Mixed Oak, Rough Cut, 2" x 8", 3" x 8" and 4" x 8"
Minimum 1/2" thick steel plates

End Shore Panel Properties

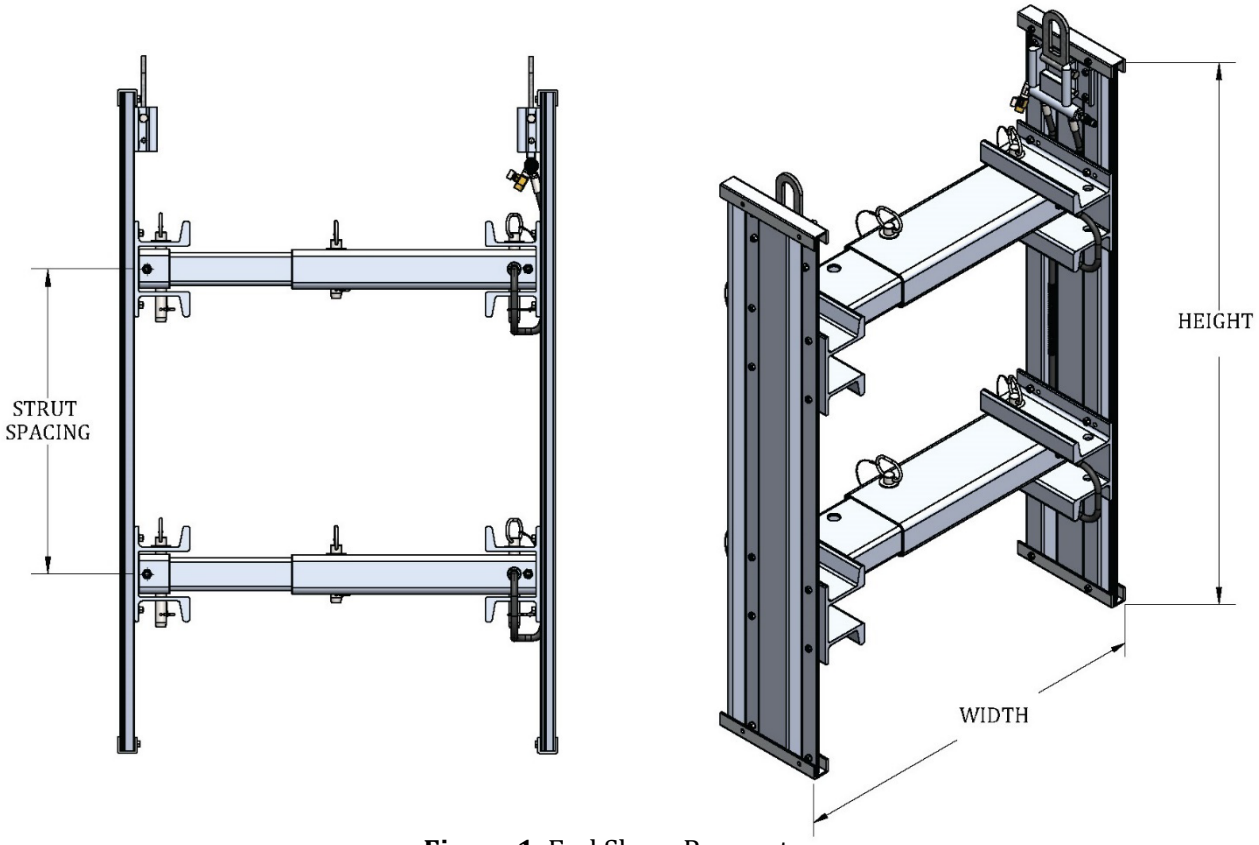

Figure 1. End Shore Parameters

Table 2. End Shore Panel Properties				
Model Number	Height (ft.)	Strut (Qty.)	Strut Spacing (in.)	Weight (lbs.)
9.3 PS-ESP-02	2	1	N/A	52.0
9.3 PS-ESP-02-HD	2	1	N/A	58.8
9.3 PS-ESP-04	4	2	24.0	96.0
9.3 PS-ESP-04-HD	4	2	24.0	99.0
9.3 PS-ESP-05	5	2	27.0	103.0
9.3 PS-ESP-05-HD	5	2	27.0	106.0
9.3 PS-ESP-06	6	2	36.0	110.0
9.3 PS-ESP-06-HD	6	2	36.0	113.0
9.3 PS-ESP-07	7	2	42.0	108.0
9.3 PS-ESP-07-HD	7	2	42.0	111.0
9.3 PS-ESP-08	8	2	45.6	124.0
9.3 PS-ESP-08-HD	8	2	45.6	128.7
9.3 PS-ESP-10	10	2	60.0	138.0
9.3 PS-ESP-10-HD	10	2	60.0	143.6

Hydraulic End Shore Configurations

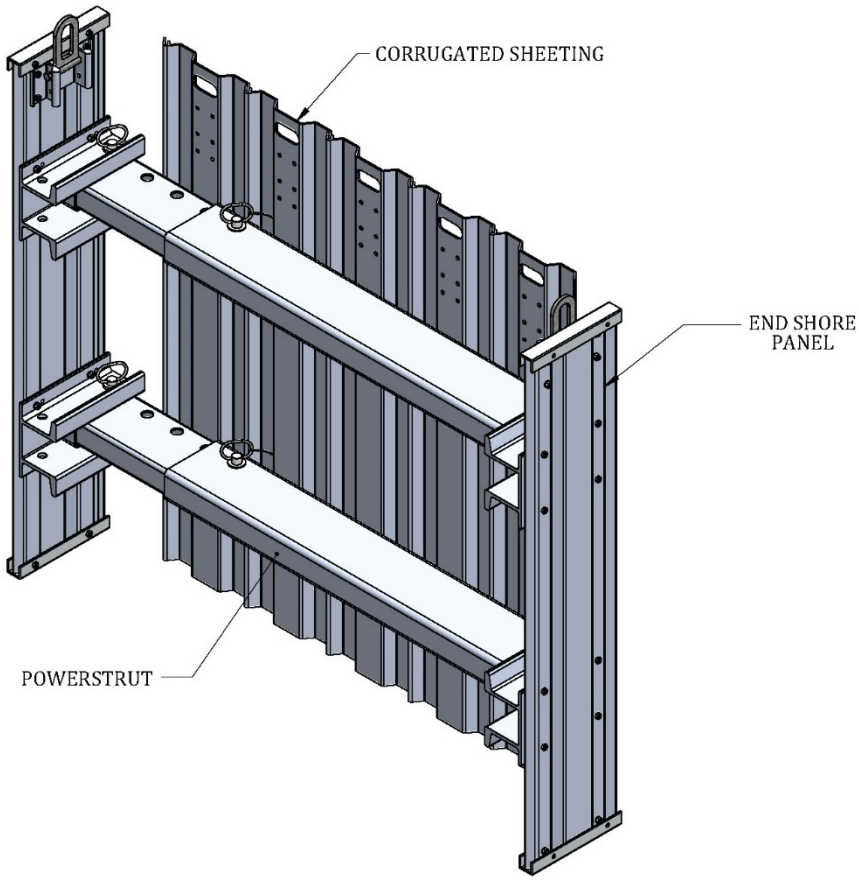

Figure 2. End Shore Component Visual

Table 3. End Shore Panel & Powerstrut Properties				
Powerstrut Properties			Hydraulic End Shore Usage	
Model Number	Internal Cylinder	Weight (lbs.)	Collapsed Range (in.)	Expanded Range (in.)
9.1 PS-ASH-PSH-21	“17-27”	28.0	24.0	34.0
9.1 PS-ASH-PSH-40	“22-36”	33.0	29.0	43.0
9.1 PS-ASH-PSH-50	“28-46”	40.0	35.0	53.0
9.1 PS-ASH-PSH-59	“34-55”	46.0	41.0	62.0
9.1 PS-ASH-PSH-68	“40-64”	54.0	47.0	71.0
9.1 PS-ASH-PSH-92	“52-88”	71.0	59.0	95.0
9.1 PS-ASH-PSH-120	“72-120”	88.0	83.0	119.0
9.1 PS-ASH-PSH-130	“94-130”	102.0	98.0	134.0
9.1 PS-ASH-PSH-144	“108-144”	115.0	112.0	148.0

Note:
- Powerstrut ranges differ from the internal cylinder sizing range.
- When using Powerstruts with End Shores, add 4 Inches to the ranges to determine the outside working dimensions.

Hydraulic End Shore General Usage

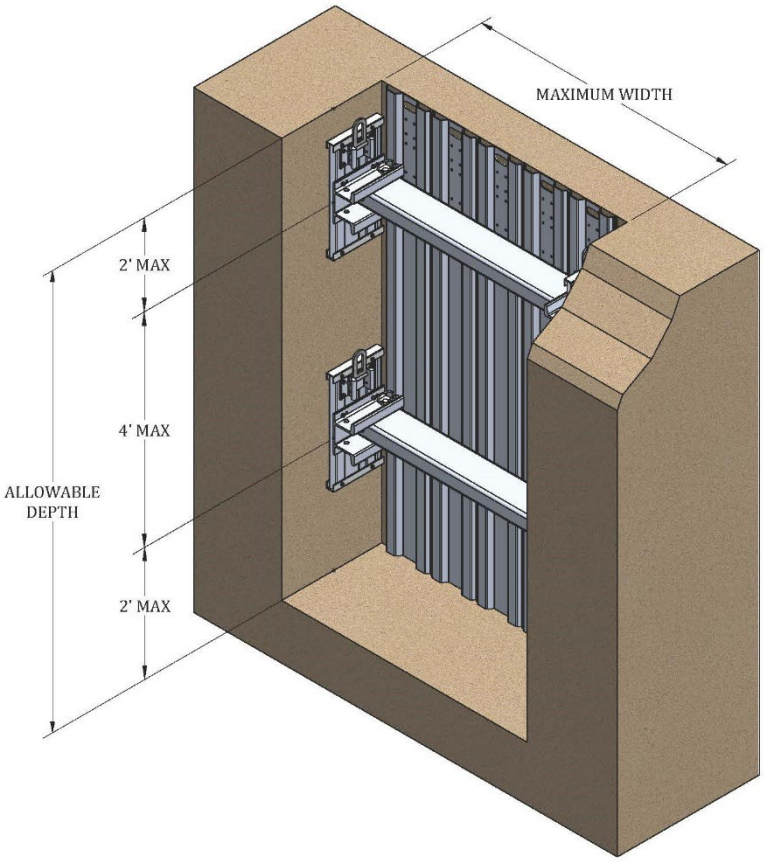

Figure 3. Stacked Usage (Typical)

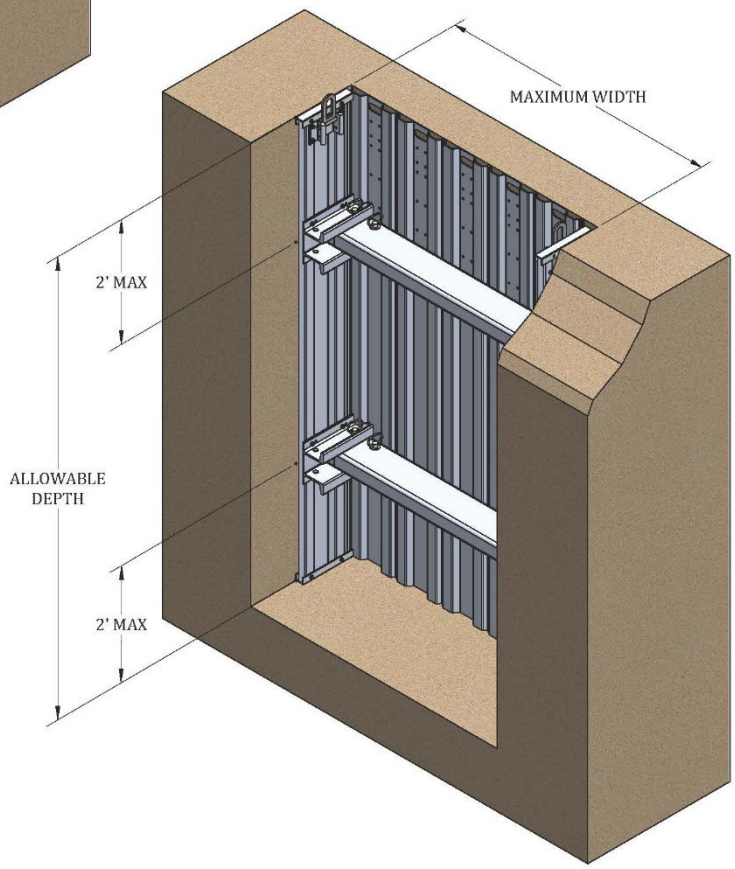

Figure 4. Single Shore Usage (Typical)

Hydraulic End Shore Allowable Depths

Table 4. Hydraulic End Shore Allowable Depths												
Model	Maximum Width =12 ft.				Maximum Width =8 ft.				Maximum Width =5 ft.			
	OSHA Soil Type				OSHA Soil Type				OSHA Soil Type			
	A-25	B-45	C-60	C-80	A-25	B-45	C-60	C-80	A-25	B-45	C-60	C-80
2’	20	11	9	8	20	20	16	12	20	20	16	12
4’	20	11	9	8	20	20	16	12	20	20	16	12
5’	20	11	9	5	20	20	14	8	20	20	16	12
6’	18	11	6	5	20	20	12	8	20	20	16	12
7’	16	11	6	N/A	20	20	11	8	20	20	16	12
8’	15	7	6	N/A	20	16	10	6	20	16	12	10
10’	15	7	N/A	N/A	20	10	8	N/A	20	16	12	10

Notes

- End Shores may be set a maximum of 2 ft. from centerline of the power strut to the bottom of the excavation. The trench depth is considered the full distance to the bottom of the excavation
- Vertical spacing shall never exceed 4 ft. on center when using multiple End Shores and multiple different sized End Shores.
- Pressurize End Shore hydraulics to 1000 psi.
- An adequate separately designed shoring system shall be used leading up to within 4 ft. of the End Shore shoring application. Systems such as Timber, Vertical Hydraulic Shores, Waler Systems, Shoring Shields, and designs by an engineer may be used in conjunction with the End Shore.
- Tabulated Depths are limited to 20 ft. deep. Additional depth may be achieved when the design is by a registered civil engineer.
- The End Shore system must be fully installed from outside the excavation
- End Sheeting may be spaced maximum 6” between sheets; however, in all cases it must prevent sloughing and raveling.
- Smaller shores can be substituted in cases where stacking a larger shore would cause the total height to exceed allowable depth.
- Allowable depths must be determined using the largest shore in use.
- Sheeting may be held a maximum of 2 ft. off the bottom of the excavation.

End Shore Systems Installation and Removal

Installation Procedure

- **End Shores must be assembled prior to setting inside the trench.**
- **The trench shoring system leading up to the End Shore system must be in place prior to workers entering the excavation**

Step 1 Set End Shore inside the excavation using appropriately sized lifting equipment and rigging as determined by a competent person.

Step 2 Pressurize hydraulics to minimum 1000 psi

Step 3 Set End Sheeting in place behind the sheeting guide across the end of the trench

Step 4 The End Sheeting must be within 6" of the trench end. If the spacing is greater than 6", backfill between the sheeting and the trench wall with excavated soil or crushed rock.

Removal Procedure

Step 1 Rig End Shore for lifting

Step 2 Remove End Sheeting from outside the excavation

Step 3 Lift End Shore out using appropriately sized lifting equipment and rigging as determined by a competent person.

Safe Handling and Use of End Shore System

- When End Shores are set in trenches that are sloped above, extend the Shore 18" above the hinge point. Slopes shall be in accordance with OSHA Appendix B sloping and benching.
- When there is sloping beyond the top of the End Shore the excavation is limited to 20 ft without a design by a registered engineer.
- Provide safe access such as ladders for workers to enter and exit the shoring system.
- Use cables and slings for lifting that have a 5:1 factor of safety. A competent person is to determine the total lift weight.
- The trench shoring system leading up to the End Shore system must be in place prior to workers entering the excavation