MODULAR ALUMINUM PANEL SYSTEMS – RED-BLUE

TABULATED DATA
Effective July 28th, 2026

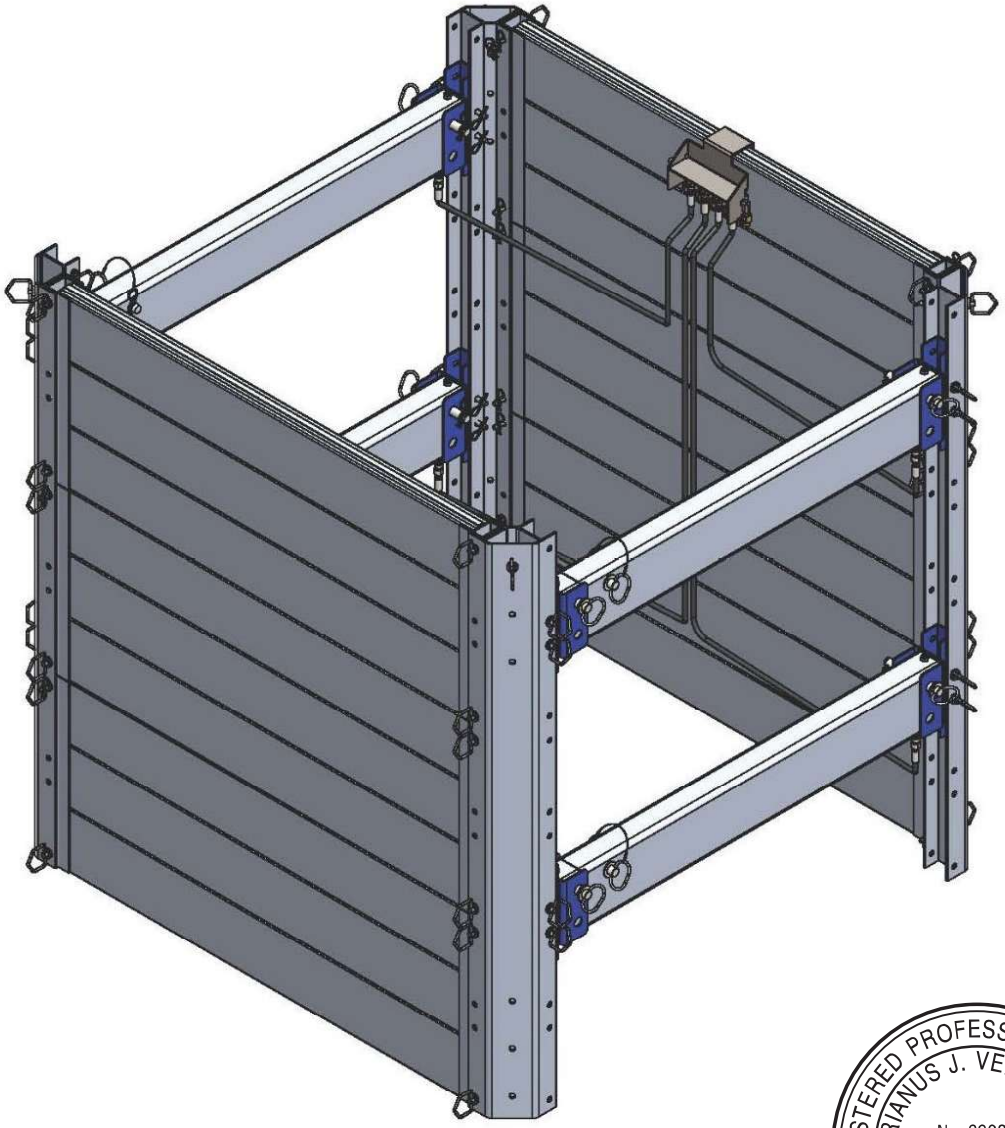

REGISTERED PROFESSIONAL ENGINEER
ADRIANUS J. VERMEULENN
No. 69082
CIVIL
STATE OF CALIFORNIA

Signed On: 7-28-2026

265 Roberts Avenue, Santa Rosa, Ca. 95407, (833) 705-1938

Contents

Cover Page 1
Contents 2
Description 2
General Information for use of Pacific Shoring Products Red-Blue MAPS 3
Classification of Soil Types 4
Determining Red-Blue MAPS Configurations 5
Geometric Properties for Engineering Design 7
Allowable Depths for Red-Blue MAPS 8
Allowable Corner Post Spans 9
Allowable Spreader Spans 13
Allowable Depths for High Clearance Arches 13
Red-Blue Modular Aluminum Panel System Installation and Removal 15
Safe Handling and Use of Red-Blue Modular Aluminum Panel Systems 15

Description

The Pacific Shoring Products Red-Blue Modular Aluminum Panel System is an aluminum shoring system consisting of tongue and groove style panels, corner posts, and adjustable struts. The system can be constructed in 2-sided, 3-sided, and 4-sided configurations.

The corner posts, panels, and adjustable struts are pinned in place. This allows construction and modification of the box at the site. Hydraulic aluminum struts are also available thereby allowing the modular box system to become a hydraulic shoring system. The panel lengths are available from 2 ft. to 16 ft. long. Corner posts vary in length from 2 ft. to 12 ft. Modular Boxes may be stacked connected longitudinally and have allowable depths up to 25 ft. Additional depths may be achieved through design by a registered professional engineer.

Static adjustable struts, and hydraulic struts adjusting to maximum of 12 ft. in width may be used with the system. Pacific Shoring Products also manufactures a medium high clearance and a high clearance arch for two- and three-sided applications. Red-Blue Modular Aluminum Panel Systems may be used in a static or dynamic configuration. A static configuration assumes that the box wall does not necessarily touch the sides of the excavation and that there is no pressure being exerted on the soil. A dynamic configuration requires that the shield walls are pressurized against the soil. Pressurization sets up soil arching and delivers some of the soil pressure directly to the corners and therefore results in less pressure on the box walls. With this configuration, slightly longer wall lengths can be achieved and the possibility of shoring wall collapse and surrounding existing facility damage can be prevented.

This shoring system is generally used in utility work where differing conditions and excavation geometry occur on a daily basis. The system can be easily loaded onto a truck and constructed at the site as the excavation dimensions and obstructions reveal themselves. Parts may be handled by one person and constructed boxes can be handled with a backhoe.

General Information for use of Pacific Shoring Products Red-Blue MAPS

1. The Red-Blue Modular Aluminum Panel Systems tabulated here is based on requirements of Federal OSHA 29CFR, Part 1926, Subpart P-Excavations, and Trenches.

   1926.652(c)(2)-Option (2) - Designs Using Manufacturer's Tabulated Data.
   1926.652(c)(2)(i) -Design of support systems, shield systems, or other protective systems that are drawn from manufacturer's tabulated data shall be in accordance with all specifications, recommendations, and limitations issued or made by the manufacturer.

   All provisions of Subpart P apply when utilizing this tabulated data. The contractor's competent person shall use this data to select allowable trench depth, box wall, and strut configuration. The competent person utilizing this tabulated data shall be experienced and knowledgeable of all requirements of Subpart P, and trained in the use and safety procedures for shoring box applications.

2. Use of this tabulated data is dependent on first classifying the soil in accordance with OSHA Appendix A, Soil Classification. Classification shall be just prior to installing shoring box. Soil conditions may change at a later date and require revaluation of the strength and allowable depth.

3. Modular aluminum buildable boxes are tabulated based on the effect of a 20,000 lb. surcharge load set back 2 ft. from the edge of the trench and the equivalent weight effect of the OSHA soil type, see classification of soil types, 2.

4. The depth and spacing given in **Tables 1, 2,** and **3** governs the use of Pacific Shoring Products Red-Blue Modular Aluminum Panel System and not tabulations given by other manufacturers. This tabulated data applies to buildable boxes manufactured by Pacific Shoring Products, LLC; however, all parts are interchangeable with Speed-Shore Modular Aluminum Panel Shields, "MAPS". Speed-Shore MAPS parts may be interchanged and used with Pacific Shoring Buildable Boxes under this tabulated data. Any alterations to the boxes or variance from this tabulated data shall be indicated in a site-specific plan prepared and approved by a registered professional engineer.

5. Faces of excavations shall be vertical and the shoring walls shall be within 12" of the excavation walls.

6. Red-Blue Modular Aluminum Panel Systems may be stacked or longitudinally connected.

7. Red-Blue Modular Aluminum Panel Systems shall be installed and removed from outside the trench, **see installation and removal procedure.**

8. The competent person shall continually monitor the shored excavation for changed conditions such as water seepage, soil movement cracks at the surface, sloughing or raveling, proper surcharge load weight less than 20,000 lbs. and setback a minimum of 2 ft. that may damage the shores.

9. Workers shall always enter, exit, and work inside the shored area of the trench.

10. Red-Blue Modular Aluminum Panel Systems may be stacked as long as they are pinned together.

11. Red-Blue Modular Aluminum Panel Systems may be set a maximum of 2 ft. from the bottom of the excavation. The trench depth is considered to be the full distance to the bottom of the excavation.

12. Designs of protective systems shall be selected and constructed by a registered professional engineer if they are over 20 feet in depth.

13. Sloping or benching for excavations greater than 20 feet deep shall be designed by a registered professional engineer.

Classification of Soil Types

1. Soil classification shall be in accordance with OSHA Appendix A and classified just prior to installing Red-Blue Modular Aluminum Panel Systems. Soil conditions may change at a later date and require the competent person to check soil conditions periodically and adjust accordingly.

2. The equivalent weight of OSHA soil types* is assumed to be as follows:

• OSHA Type "A" Soil	25 PSF per ft of depth
• OSHA Type "B" Soil	45 PSF per ft of depth
• Type "C-60" Soil	60 PSF per ft of depth**
• OSHA Type "C" Soil	80 PSF per ft of depth

* These equivalent weights were adapted from OSHA 1926 Subpart P App C, Timber Shoring for Trenches, Tables C-1.1, C-1.2, and C-1.3

** Type C-60 soil is not identified or classified in OSHA Appendix A.

3. Type C-60 soil is soil that does not qualify as OSHA Type A, or Type B, can be cut with vertical walls and will stand up long enough to safely insert and pressurize the hydraulic system.

4. Red-Blue Modular Aluminum Panel Systems may be used in C-80 soil provided they are dug into the excavation and not driven into the soil.

Determining Red-Blue MAPS Configurations

Shoring use and configurations shall be determined by the user (employer and designated competent person). The following steps are necessary to properly configure and construct a Red-Blue Modular Aluminum Panel System:

1. Define soil type in accordance with OSHA Appendix A.

2. Determine surcharge loading. All shoring equipment is designed for a maximum of a 20,000 lb. surcharge load set back 2 ft. from the edge of the trench. Larger loads shall be set back further or reduced. The competent person shall have training and knowledge in proper determination of surcharge loads.

3. Determine length, width, and depth of shoring requirement.

4. Determine existing facilities and depths that they will enter into the shoring configuration.

5. Determine depths, locations, and clearance requirements of facilities that will be constructed inside the shoring.

6. Determine components of the Red-Blue Modular Aluminum Panel System needed to fit the requirements of the job site. These components will at a minimum consist of:

    - Modular Panels.
    - Corner Posts.
    - Steel Adjustable Spreaders for 2 and 3-sided configurations.
    - Connecting Pins.

7. Determine allowable depths and settings for components as follows:

    a) Modular Panels - **Table 1. - Allowable Depth for Modular Aluminum Panel Systems**
    b) Corner Posts - **Table 2-2. through Table 2-16. - Allowable Corner Post Spans**. Corner posts have an allowable cantilever span and allowable spreader spacing span based on the depth of the excavation. These tables apply to hydraulic power struts, steel adjustable spreaders, and screw jack struts.
    c) Adjustable Spreaders - **Table 3. - Allowable Spreader Spans**.
    d) High Clearance Arches – **Table 4. – Allowable Depth Ratings**

8. Determine approximate shoring system weight before rigging.

    Note. Rigging equipment and connections should have a 5:1 factor of safety.

Red-Blue MAPS Components & Sizing

Red-Blue Modular Panels	
Size	Weight (lbs.)
2' x 2'	22.92
2' x 3'	36.47
2' x 4'	50.01
2' x 5'	63.56
2' x 6'	77.10
2' x 7'	90.64
2' x 8'	104.19
2' x 10'	131.27
2' x 12'	158.36
2’ x 13’	171.91
2' x 14'	185.45
2' x 16'	212.53

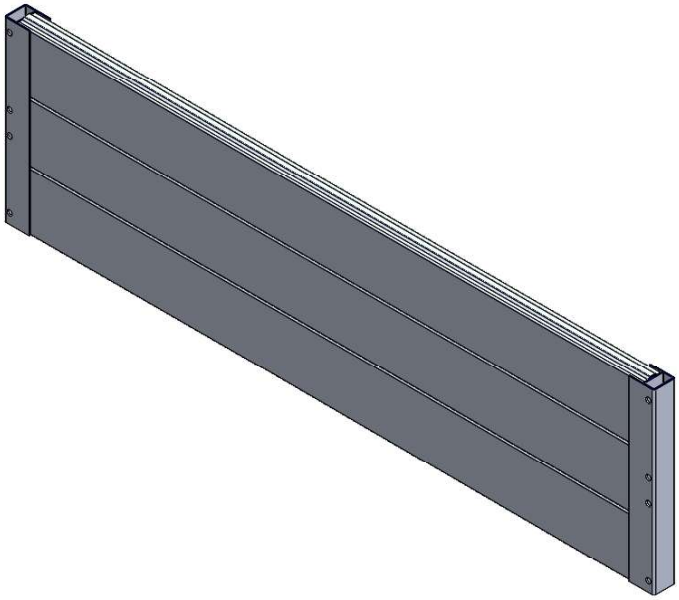

Fig. 1 MAPS Panel

Red-Blue Corner Posts	
Size	Weight (lbs.)
2’	12.75
4’	25.54
6’	38.35
8’	51.16
10’	63.97
12’	76.79

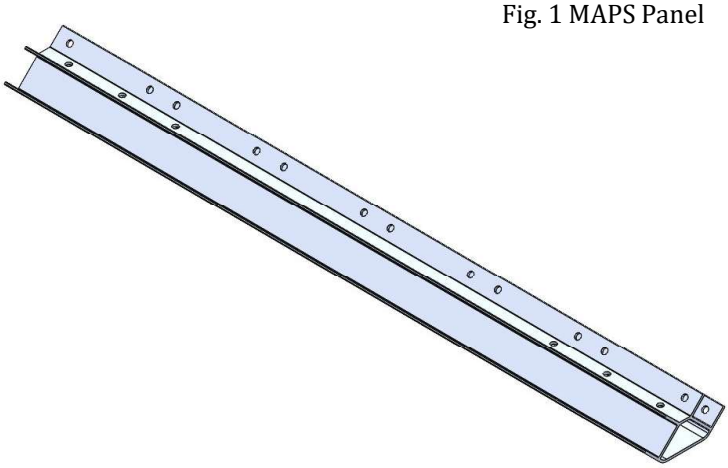

Fig. 2 MAPS Corner Post

Red-Blue Adjustable Spreaders	
Size	Weight (lbs.)
21-30	30.05
27-36	36.99
35-48	46.81
40-60	52.90
52-84	67.57
60-96	77.45
72-120	92.12
108-144	137.14

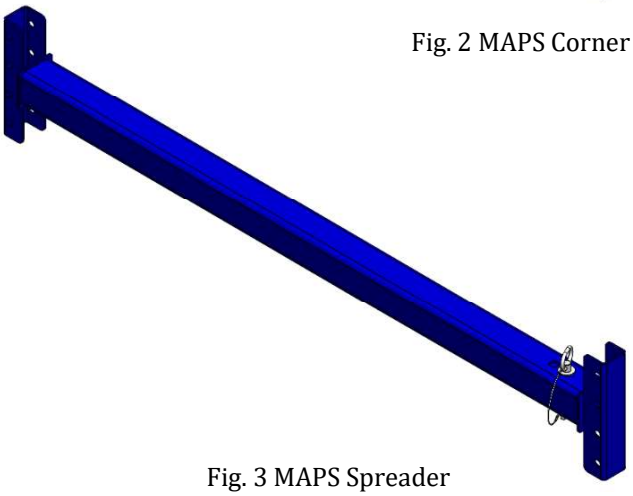

Fig. 3 MAPS Spreader

Geometric Properties for Engineering Design

Material Properties (Extruded)		
Aluminum Alloy	6061-T6	6005A-T61
Ultimate Tensile Strength	45,000 psi	45,000 psi
Tensile Yield Strength	40,000 psi	40,000 psi
Modulus of Elasticity	10,000 ksi	10,000 ksi

Extrusion Profile Properties		
Section Properties	Red-Blue MAPS Panel	Red-Blue MAPS Corner Post
Area	5.83 in^2	5.28 in^2
Weight	4.51 lbs./ft.	6.58 lbs./ft.
Moment of Inertia	6.94 in^4	17.64 in^4
Section Modulus	5.38 in^3	4.96 in^3

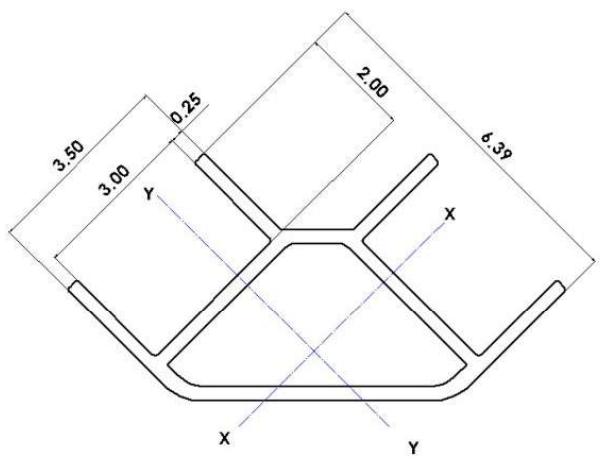

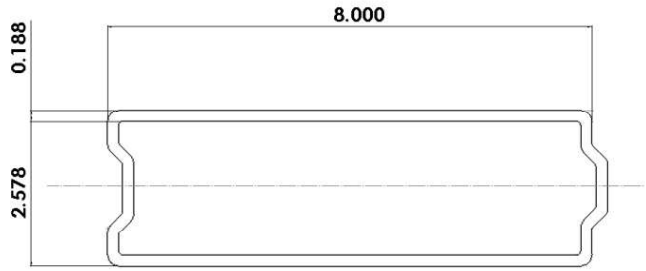

Fig. 4 Section Properties

Allowable Depths for Red-Blue MAPS

To determine the allowable depth rating for Red-Blue Modular Aluminum Panels use **Table 1.** below.

Example - If the longest wall panel element is 12 ft. long and to be used in C-60 soil, from **Table 1.** the box may be used to a depth of 12 ft.

Table 1. Allowable Depths for Red-Blue Modular Aluminum Panels					
Panel Length (ft.)	Panel Capacity (PSF)	Maximum Allowable Depth (ft.)*			
		OSHA Soil Type			
		A-25	B-45	C-60	C-80
2' x 2'	18,455	40	40	40	40
2' x 3'	13,691	40	40	40	40
2' x 4'	7,303	40	40	40	40
2' x 5'	4,530	40	40	40	40
2' x 6'	3,082	40	40	40	37
2' x 7'	2,232	40	40	37	28
2' x 8'	1,680	40	37	28	21
2' x 10'	1,072	40	24	18	13
2' x 12'	744	30	17	12	9
2' x 13'	632	25	14	11	8
2' x 14'	544	22	12	9	7
2' x 16'	416	17	9	7	5

* Maximum allowable depth includes any sloping or benching.

Table 1. Notes

1. The panel assemblies are Pacific Shoring Products Modular Aluminum Panels as detailed in this tabulated data.
2. The longest modular panel wall in the constructed box shall govern the allowable depth given in **Table 1.**
3. Two- and three-sided boxes shall be strutted with spreaders and or arches.
4. See **Table 2-2. through Table 2-16.** for allowable corner post spans.
5. See **Table 3.** for allowable spreader spans.
6. If high clearance arches are to be used in any application, refer to the allowable depth ratings outlined in **Table 4.**
7. The modular panel lengths are considered to be the overall dimension from outside of corner post to outside of opposite corner post.
8. Modular panels and adjustable spreaders must use a minimum of four connecting pins and keepers to secure them to the corner posts,
    a. **(Two per side.)**
9. Sloping or benching for excavations greater than 20 feet deep shall be designed by a registered professional engineer.

Allowable Corner Post Spans

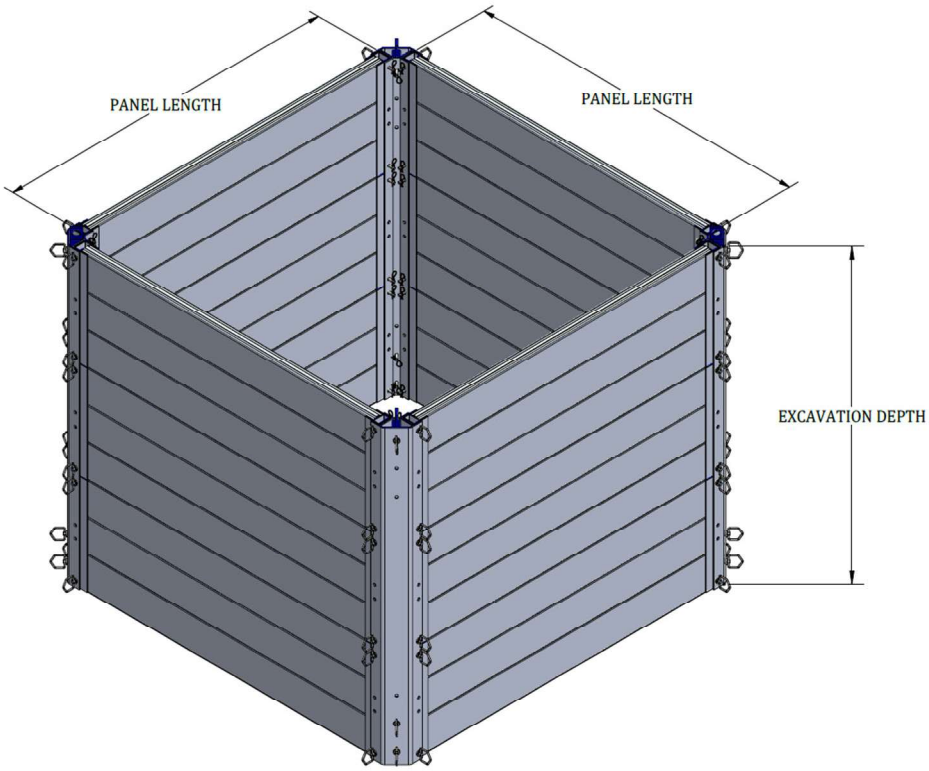

Fig. 5 Four-Sided Application

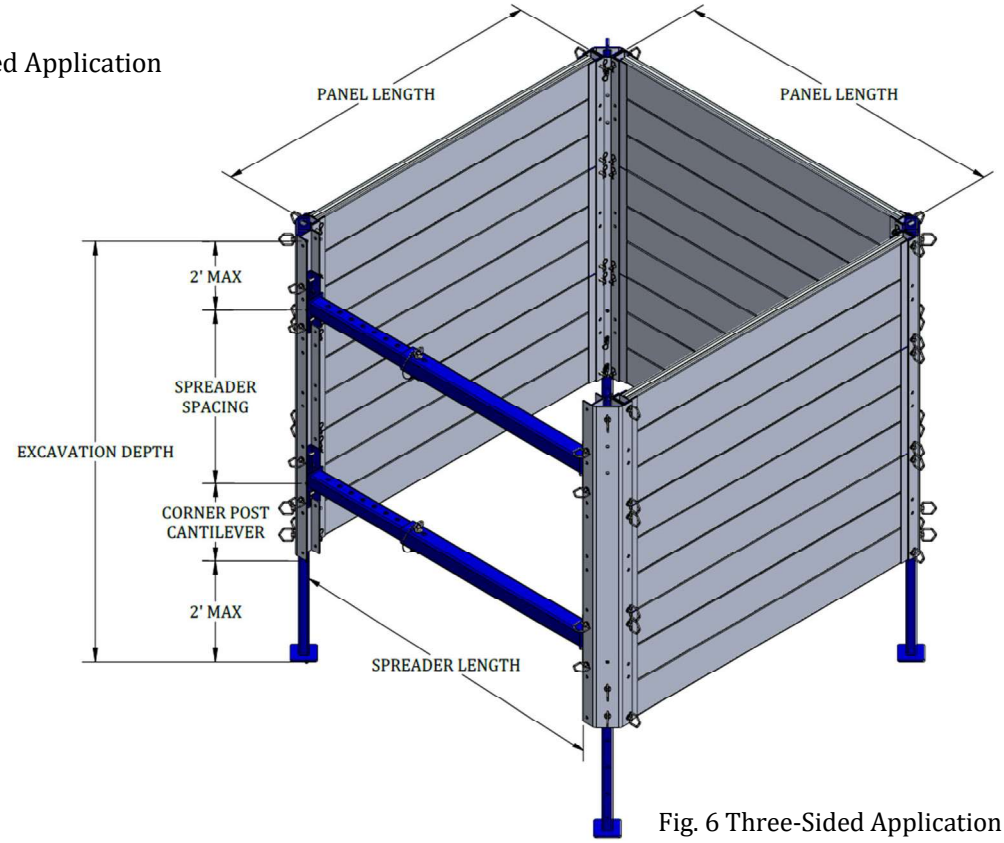

Fig. 6 Three-Sided Application

Allowable Corner Post Spans

On two- and three-sided boxes, use **Table 2-2. through Table 2-16.** to determine the allowable corner post cantilever and allowable strut spacing.

Example- If the longest wall panel element on a 3-sided box is 12 ft. long and to be used in C-60 soil at 14 ft. deep, from **Table 2-12**, the maximum corner post cantilever can be 2 ft, and the maximum strut spacing can be 4 ft.

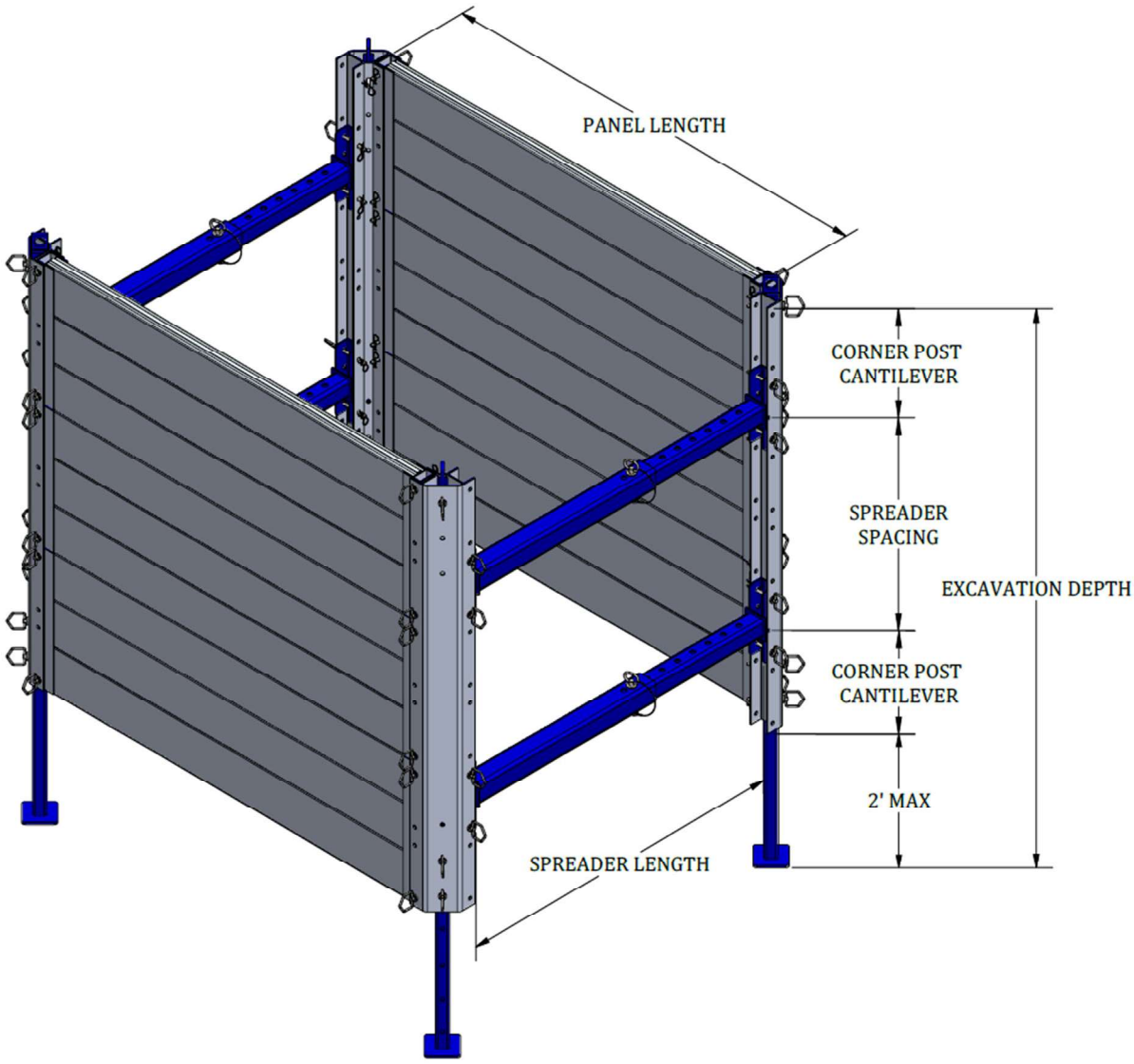

Fig. 7 Two-Sided Application

Note

When modular aluminum panel systems are set in trenches that are sloped above, extend the box 18" above the hinge point. Slopes shall be in accordance with OSHA Appendix B sloping and benching.

Table 2-2. Allowable Corner Post Spans								
2' x 2' Panel Length								
Depth (ft.)	Corner Post Cantilever (ft.)				Spreader Spacing (ft.)			
	OSHA Soil Type				OSHA Soil Type			
	A-25	B-45	C-60	C-80	A-25	B-45	C-60	C-80
6	3.0	3.0	3.0	3.0	4.0	4.0	4.0	4.0
8	3.0	3.0	3.0	3.0	4.0	4.0	4.0	4.0
10	3.0	3.0	3.0	3.0	4.0	4.0	4.0	4.0
12	3.0	3.0	3.0	3.0	4.0	4.0	4.0	4.0
14	3.0	3.0	3.0	3.0	4.0	4.0	4.0	4.0
16	3.0	3.0	3.0	3.0	4.0	4.0	4.0	4.0
18	3.0	3.0	3.0	3.0	4.0	4.0	4.0	4.0
20	3.0	3.0	3.0	3.0	4.0	4.0	4.0	4.0
22	3.0	3.0	3.0	3.0	4.0	4.0	4.0	4.0
24	3.0	3.0	3.0	3.0	4.0	4.0	4.0	4.0
25	3.0	3.0	3.0	3.0	4.0	4.0	4.0	4.0

Table 2-3. Allowable Corner Post Spans								
2' x 3' Panel Length								
Depth (ft.)	Corner Post Cantilever (ft.)				Spreader Spacing (ft.)			
	OSHA Soil Type				OSHA Soil Type			
	A-25	B-45	C-60	C-80	A-25	B-45	C-60	C-80
6	3.0	3.0	3.0	3.0	4.0	4.0	4.0	4.0
8	3.0	3.0	3.0	3.0	4.0	4.0	4.0	4.0
10	3.0	3.0	3.0	3.0	4.0	4.0	4.0	4.0
12	3.0	3.0	3.0	3.0	4.0	4.0	4.0	4.0
14	3.0	3.0	3.0	3.0	4.0	4.0	4.0	4.0
16	3.0	3.0	3.0	3.0	4.0	4.0	4.0	4.0
18	3.0	3.0	3.0	3.0	4.0	4.0	4.0	4.0
20	3.0	3.0	3.0	3.0	4.0	4.0	4.0	4.0
22	3.0	3.0	3.0	3.0	4.0	4.0	4.0	4.0
24	3.0	3.0	3.0	3.0	4.0	4.0	4.0	4.0
25	3.0	3.0	3.0	3.0	4.0	4.0	4.0	4.0

Table 2-4. Allowable Corner Post Spans								
2' x 4' Panel Length								
Depth (ft.)	Corner Post Cantilever (ft.)				Spreader Spacing (ft.)			
	OSHA Soil Type				OSHA Soil Type			
	A-25	B-45	C-60	C-80	A-25	B-45	C-60	C-80
6	3.0	3.0	3.0	3.0	4.0	4.0	4.0	4.0
8	3.0	3.0	3.0	3.0	4.0	4.0	4.0	4.0
10	3.0	3.0	3.0	3.0	4.0	4.0	4.0	4.0
12	3.0	3.0	3.0	3.0	4.0	4.0	4.0	4.0
14	3.0	3.0	3.0	3.0	4.0	4.0	4.0	4.0
16	3.0	3.0	3.0	3.0	4.0	4.0	4.0	4.0
18	3.0	3.0	3.0	3.0	4.0	4.0	4.0	4.0
20	3.0	3.0	3.0	3.0	4.0	4.0	4.0	4.0
22	3.0	3.0	3.0	3.0	4.0	4.0	4.0	4.0
24	3.0	3.0	3.0	3.0	4.0	4.0	4.0	4.0
25	3.0	3.0	3.0	3.0	4.0	4.0	4.0	4.0

Table 2-5. Allowable Corner Post Spans								
2' x 5' Panel Length								
Depth (ft.)	Corner Post Cantilever (ft.)				Spreader Spacing (ft.)			
	OSHA Soil Type				OSHA Soil Type			
	A-25	B-45	C-60	C-80	A-25	B-45	C-60	C-80
6	3.0	3.0	3.0	3.0	4.0	4.0	4.0	4.0
8	3.0	3.0	3.0	3.0	4.0	4.0	4.0	4.0
10	3.0	3.0	3.0	3.0	4.0	4.0	4.0	4.0
12	3.0	3.0	3.0	3.0	4.0	4.0	4.0	4.0
14	3.0	3.0	3.0	2.9	4.0	4.0	4.0	4.0
16	3.0	3.0	3.0	3.0	4.0	4.0	4.0	4.0
18	3.0	3.0	3.0	3.0	4.0	4.0	4.0	4.0
20	3.0	3.0	3.0	3.0	4.0	4.0	4.0	4.0
22	3.0	3.0	3.0	2.0	4.0	4.0	4.0	4.0
24	3.0	3.0	3.0	2.0	4.0	4.0	4.0	4.0
25	3.0	3.0	3.0	2.0	4.0	4.0	4.0	4.0

Table 2-6. Allowable Corner Post Spans								
2' x 6' Panel Length								
Depth (ft.)	Corner Post Cantilever (ft.)				Spreader Spacing (ft.)			
	OSHA Soil Type				OSHA Soil Type			
	A-25	B-45	C-60	C-80	A-25	B-45	C-60	C-80
6	3.0	3.0	3.0	3.0	4.0	4.0	4.0	4.0
8	3.0	3.0	3.0	3.0	4.0	4.0	4.0	4.0
10	3.0	3.0	3.0	3.0	4.0	4.0	4.0	4.0
12	3.0	3.0	3.0	3.0	4.0	4.0	4.0	4.0
14	3.0	3.0	3.0	3.0	4.0	4.0	4.0	4.0
16	3.0	3.0	3.0	3.0	4.0	4.0	4.0	4.0
18	3.0	3.0	3.0	3.0	4.0	4.0	4.0	4.0
20	3.0	3.0	3.0	2.0	4.0	4.0	4.0	4.0
22	3.0	3.0	3.0	2.0	4.0	4.0	4.0	4.0
24	3.0	3.0	2.0	2.0	4.0	4.0	4.0	4.0
25	3.0	3.0	2.0	2.0	4.0	4.0	4.0	4.0

Table 2-7. Allowable Corner Post Spans								
2' x 7' Panel Length								
Depth (ft.)	Corner Post Cantilever (ft.)				Spreader Spacing (ft.)			
	OSHA Soil Type				OSHA Soil Type			
	A-25	B-45	C-60	C-80	A-25	B-45	C-60	C-80
6	3.0	3.0	3.0	3.0	4.0	4.0	4.0	4.0
8	3.0	3.0	3.0	3.0	4.0	4.0	4.0	4.0
10	3.0	3.0	3.0	3.0	4.0	4.0	4.0	4.0
12	3.0	3.0	3.0	3.0	4.0	4.0	4.0	4.0
14	3.0	3.0	3.0	3.0	4.0	4.0	4.0	4.0
16	3.0	3.0	3.0	2.0	4.0	4.0	4.0	4.0
18	3.0	3.0	3.0	2.0	4.0	4.0	4.0	4.0
20	3.0	3.0	2.0	2.0	4.0	4.0	4.0	4.0
22	3.0	3.0	2.0	2.0	4.0	4.0	4.0	4.0
24	3.0	3.0	2.0	2.0	4.0	4.0	4.0	4.0
25	3.0	3.0	2.0	2.0	4.0	4.0	4.0	4.0

Table 2-8. Allowable Corner Post Spans								
2' x 8' Panel Length								
Depth (ft.)	Corner Post Cantilever (ft.)				Spreader Spacing (ft.)			
	OSHA Soil Type				OSHA Soil Type			
	A-25	B-45	C-60	C-80	A-25	B-45	C-60	C-80
6	3.0	3.0	3.0	3.0	4.0	4.0	4.0	4.0
8	3.0	3.0	3.0	3.0	4.0	4.0	4.0	4.0
10	3.0	3.0	3.0	3.0	4.0	4.0	4.0	4.0
12	3.0	3.0	3.0	3.0	4.0	4.0	4.0	4.0
14	3.0	3.0	3.0	2.0	4.0	4.0	4.0	4.0
16	3.0	3.0	3.0	2.0	4.0	4.0	4.0	4.0
18	3.0	3.0	2.0	2.0	4.0	4.0	4.0	4.0
20	3.0	3.0	2.0	2.0	4.0	4.0	4.0	4.0
22	3.0	2.0	2.0	2.0	4.0	4.0	4.0	4.0
24	3.0	2.0	2.0	2.0	4.0	4.0	4.0	3.0
25	3.0	2.0	2.0	2.0	4.0	4.0	4.0	3.0

Table 2-10. Allowable Corner Post Spans								
2' x 10' Panel Length								
Depth (ft.)	Corner Post Cantilever (ft.)				Spreader Spacing (ft.)			
	OSHA Soil Type				OSHA Soil Type			
	A-25	B-45	C-60	C-80	A-25	B-45	C-60	C-80
6	3.0	3.0	3.0	3.0	4.0	4.0	4.0	4.0
8	3.0	3.0	3.0	3.0	4.0	4.0	4.0	4.0
10	3.0	3.0	3.0	2.0	4.0	4.0	4.0	4.0
12	3.0	3.0	3.0	2.0	4.0	4.0	4.0	4.0
14	3.0	3.0	2.0	2.0	4.0	4.0	4.0	4.0
16	3.0	3.0	2.0	2.0	4.0	4.0	4.0	4.0
18	3.0	2.0	2.0	2.0	4.0	4.0	4.0	4.0
20	3.0	2.0	2.0	2.0	4.0	4.0	4.0	3.0
22	3.0	2.0	2.0	2.0	4.0	4.0	4.0	3.0
24	3.0	2.0	2.0	2.0	4.0	4.0	4.0	3.0
25	3.0	2.0	2.0	2.0	4.0	4.0	3.0	3.0

Table 2-12. Allowable Corner Post Spans								
2' x 12' Panel Length								
Depth (ft.)	Corner Post Cantilever (ft.)				Spreader Spacing (ft.)			
	OSHA Soil Type				OSHA Soil Type			
	A-25	B-45	C-60	C-80	A-25	B-45	C-60	C-80
6	3.0	3.0	3.0	3.0	4.0	4.0	4.0	4.0
8	3.0	3.0	3.0	2.0	4.0	4.0	4.0	4.0
10	3.0	3.0	3.0	2.0	4.0	4.0	4.0	4.0
12	3.0	3.0	2.0	2.0	4.0	4.0	4.0	4.0
14	3.0	3.0	2.0	2.0	4.0	4.0	4.0	4.0
16	3.0	2.0	2.0	2.0	4.0	4.0	4.0	3.0
18	3.0	2.0	2.0	2.0	4.0	4.0	4.0	3.0
20	3.0	2.0	2.0	2.0	4.0	4.0	4.0	3.0
22	3.0	2.0	2.0	2.0	4.0	4.0	3.0	2.0
24	3.0	2.0	2.0	2.0	4.0	4.0	3.0	2.0
25	3.0	2.0	2.0	1.0	4.0	4.0	3.0	2.0

Table 2-13. Allowable Corner Post Spans								
2' x 13' Panel Length								
Depth (ft.)	Corner Post Cantilever (ft.)				Spreader Spacing (ft.)			
	OSHA Soil Type				OSHA Soil Type			
	A-25	B-45	C-60	C-80	A-25	B-45	C-60	C-80
6	3.0	3.0	3.0	2.0	4.0	4.0	4.0	4.0
8	3.0	3.0	3.0	2.0	4.0	4.0	4.0	4.0
10	3.0	3.0	2.0	2.0	4.0	4.0	4.0	4.0
12	3.0	3.0	2.0	2.0	4.0	4.0	4.0	4.0
14	3.0	2.0	2.0	2.0	4.0	4.0	4.0	3.0
16	3.0	2.0	2.0	2.0	4.0	4.0	4.0	3.0
18	3.0	2.0	2.0	2.0	4.0	4.0	4.0	3.0
20	3.0	2.0	2.0	2.0	4.0	4.0	3.0	2.0
22	3.0	2.0	2.0	2.0	4.0	4.0	3.0	2.0
24	2.0	2.0	2.0	1.0	4.0	4.0	3.0	2.0
25	2.0	2.0	2.0	1.0	4.0	3.0	3.0	2.0

Table 2-14. Allowable Corner Post Spans								
2' x 14' Panel Length								
Depth (ft.)	Corner Post Cantilever (ft.)				Spreader Spacing (ft.)			
	OSHA Soil Type				OSHA Soil Type			
	A-25	B-45	C-60	C-80	A-25	B-45	C-60	C-80
6	3.0	3.0	3.0	3.0	4.0	4.0	4.0	4.0
8	3.0	3.0	3.0	2.0	4.0	4.0	4.0	4.0
10	3.0	3.0	2.0	2.0	4.0	4.0	4.0	4.0
12	3.0	2.0	2.0	2.0	4.0	4.0	4.0	4.0
14	3.0	2.0	2.0	2.0	4.0	4.0	4.0	3.0
16	3.0	2.0	2.0	2.0	4.0	4.0	4.0	3.0
18	3.0	2.0	2.0	2.0	4.0	4.0	3.0	3.0
20	3.0	2.0	2.0	2.0	4.0	4.0	3.0	2.0
22	2.0	2.0	2.0	1.0	4.0	4.0	3.0	2.0
24	2.0	2.0	2.0	1.0	4.0	3.0	3.0	2.0
25	2.0	2.0	2.0	1.0	4.0	3.0	2.0	2.0

Table 2-16. Allowable Corner Post Spans								
2' x 16' Panel Length								
Depth (ft.)	Corner Post Cantilever (ft.)				Spreader Spacing (ft.)			
	OSHA Soil Type				OSHA Soil Type			
	A-25	B-45	C-60	C-80	A-25	B-45	C-60	C-80
6	3.0	3.0	2.0	2.0	4.0	4.0	4.0	4.0
8	3.0	2.0	2.0	2.0	4.0	4.0	4.0	3.0
10	3.0	2.0	2.0	2.0	4.0	4.0	3.0	3.0
12	3.0	2.0	2.0	2.0	4.0	3.0	3.0	3.0
14	3.0	2.0	2.0	1.0	4.0	3.0	3.0	2.0
16	2.0	2.0	2.0	1.0	3.0	3.0	2.0	2.0
18	2.0	2.0	2.0	1.0	3.0	3.0	2.0	2.0
20	2.0	2.0	1.0	1.0	3.0	3.0	2.0	1.0
22	2.0	2.0	1.0	1.0	3.0	2.0	2.0	1.0
24	2.0	2.0	1.0	1.0	3.0	2.0	2.0	1.0
25	2.0	2.0	1.0	1.0	3.0	2.0	2.0	1.0

Table 2-2. through Table 2-16. Notes

1. The upper most spreader element shall be placed no more than 2 ft. from the top of the corner post as seen in the diagram on page 9.
2. Always use a minimum of two struts per corner post.
    a. 2 ft. stackers are an exception provided they are connected and secured using stacking pins and the appropriate hardware.
3. Short sectional corner posts up to 4 ft. in length shall have a strut top and bottom.
4. Long sectional corner posts from 6 ft. to 12 ft. in length shall have spreaders spaced as shown in **Table 2-2 through Table 2-16.**
5. Interpolation between tables is OK.
6. Two-, Three- and Four-sided **simple static** applications do not require continuous corner post so long as the stacked boxes are connected and secured using stacking pins and the appropriate hardware.
7. One-sided boxes shall have continuous corner post, for example an 8 ft. tall one-sided box must have an 8 ft. long corner posts.
    a. Strut spacing shall be as shown in **Table 2-8**.
8. When using legs to raise the modular aluminum panel system 2 ft. from the bottom of the excavation, the corner post cantilever may not exceed 2 ft. giving a total clearance of 4 ft.

Allowable Spreader Spans

Table 3. gives the maximum allowable spreader length allowed for any modular aluminum panel system configuration. Longer lengths may be allowed as determined by a registered professional engineer.

Table 3. Allowable Spreader Spans	
Spreader Type	Spreader Length (ft.)
Adjustable Spreader (static)	12’
Power Strut (hydraulic)	12’

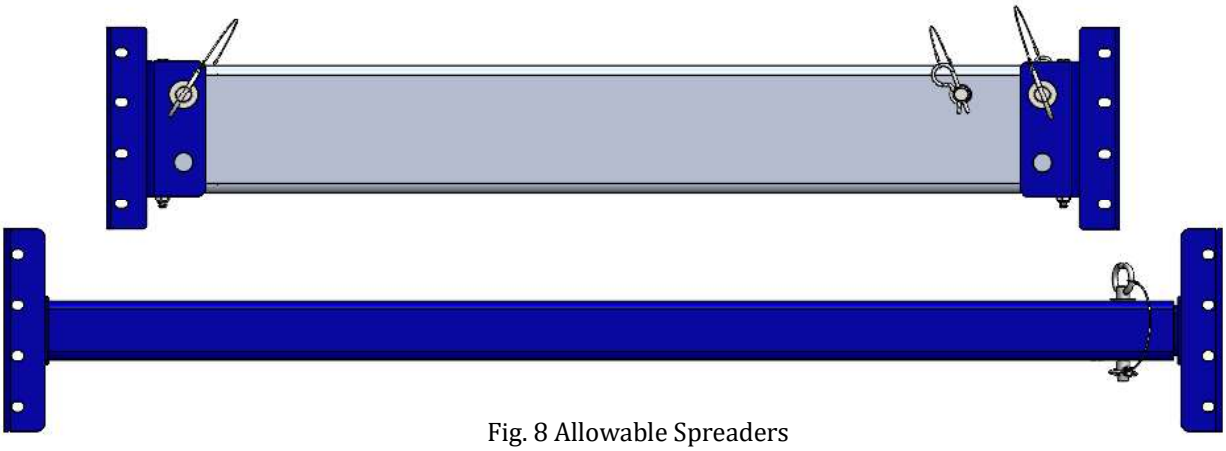

Fig. 8 Allowable Spreaders

Allowable Depths for High Clearance Arches

High Clearance Arches are used to achieve additional clearance below the strut. These arches can be used with modular boxes constructed 6 ft. and 8 ft high. Additional boxes may be stacked above modular box configurations that use Style A Arches.

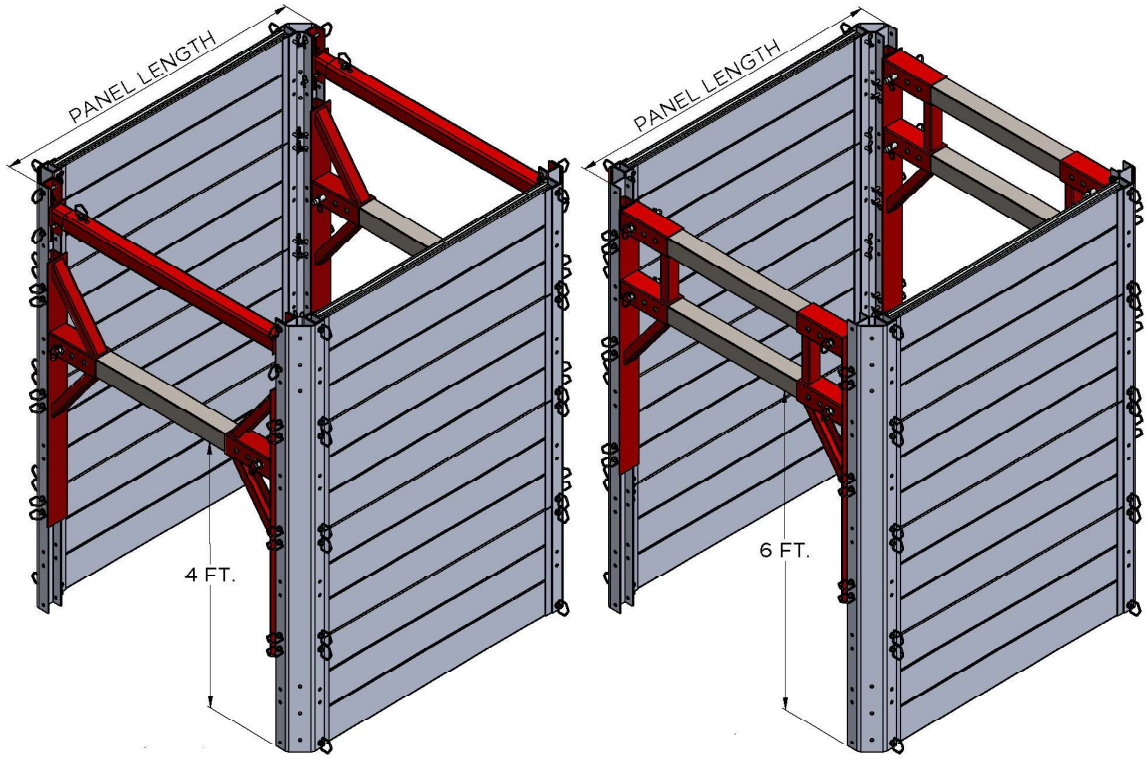

Fig. 9 High Clearance Arches

Table 4. Allowable Depths For High Clearance Arches								
Panel Length (ft.)	Style A Arch				Style B Arch			
	Clearance = 4 ft.				Clearance = 6 ft.			
	OSHA Soil Type				OSHA Soil Type			
	A-25	B-45	C-60	C-80	A-25	B-45	C-60	C-80
2' x 2'	20	20	20	16	20	20	20	16
2' x 3'	20	20	20	16	20	20	20	16
2' x 4'	20	20	20	16	20	20	20	16
2' x 5'	20	20	20	16	20	20	18	16
2' x 6'	20	20	20	16	20	20	16	14
2' x 7'	20	20	20	16	20	18	16	12
2' x 8'	20	20	20	16	20	18	14	10
2' x 10'	20	20	18	14	14	14	10	8
2' x 12'	20	18	14	8	8	8	8	6
2' x 13'	20	15	11	7	7	7	6	6
2' x 14'	20	12	8	6	6	6	6	6
2' x 16'	16	8	6	N/A	N/A	N/A	N/A	N/A

Table 4. Notes

1. The corner posts must be continuous from bottom to top of modular box application
2. There must always be a single strut used on the same corner post set above the medium clearance arch.
3. On excavations to 10 ft. deep and maximum 10 ft. wide in A, B & C-60 soil, it is allowable to use sheet pile and timber lagging set against the spreaders at the ends.
4. Leg sets may not be used in conjunction with high clearance arches to raise the modular box application 2 ft. off the bottom of the excavation.
5. 4" x 4" x 3/16" A-500 GR-B structural steel square tubing shall be used as static arch spreaders.

Red-Blue Modular Aluminum Panel System Installation and Removal

Installation Procedure

Modular aluminum panel systems must be constructed prior to setting inside the trench.

Step 1 Pin panels into corner posts. Assemble the system in a stable configuration starting at the corners and setting modular panels in opposite directions.
Step 2 In two- and three-sided configurations pin the steel adjustable spreaders into the corner posts and adjust them to the proper length.
Step 3 Lower the assembled system into the trench with the proper lifting equipment such as a backhoe, boom truck or crane.

Removal Procedure

Step 1 Remove the box using equipment operated from outside the trench. Workers are not allowed inside the box when it is being set, moved, or removed from the trench.

Safe Handling and Use of Red-Blue Modular Aluminum Panel Systems

- When modular aluminum panel systems are set in trenches that are sloped above, extend the box 18" above the hinge point. Slopes shall be in accordance with OSHA Appendix B sloping and benching.

- When there is sloping beyond the top of the box depth of the excavation is limited to 20 ft. without a design by a registered engineer.

- Workers are not allowed inside the box when it is being set, moved, or removed from the trench.

- Provide safe access such as ladders for workers to enter and exit the shoring system.

- Use cables and slings for lifting that have a 5:1 factor of safety. A competent person is to determine the total lift weight.