BUILDABLE BOX SHEETING GUIDE

TABULATED DATA
Effective February 12, 2020
YELLOW

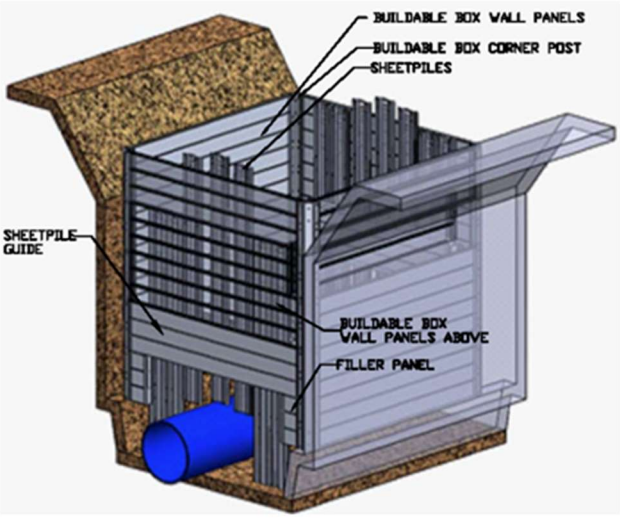

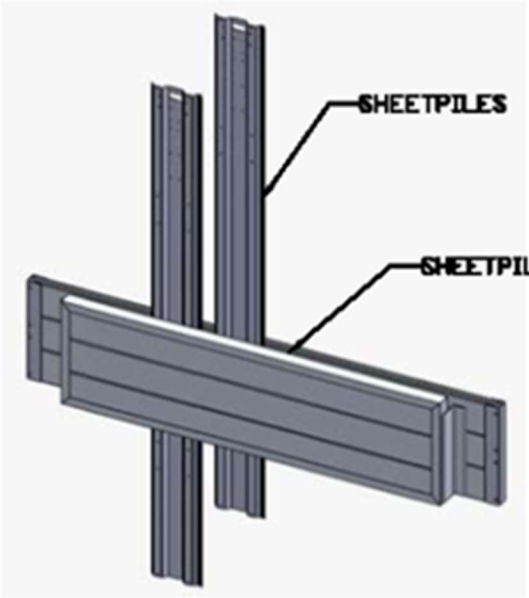

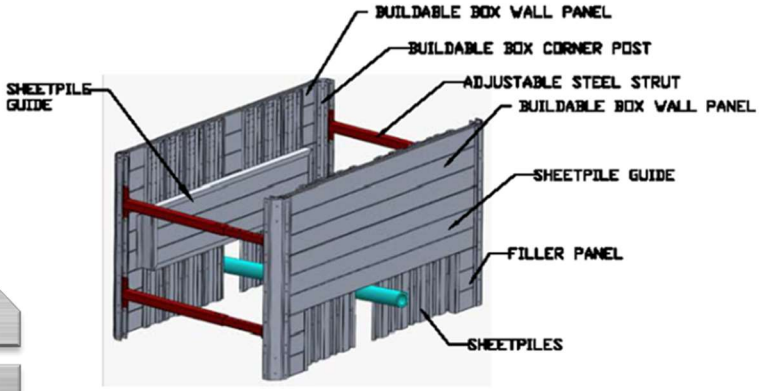

J.M. TURNER ENGINEERING, INC.
CONSULTING ENGINEERS
1325 COLLEGE AVE., SANTA ROSA, CA 95404
(707) 528-4503 FAX (707) 528-4505

REGISTERED PROFESSIONAL ENGINEER
ADRIANUS J. VERMEULEN
No. 69082
CIVIL
STATE OF CALIFORNIA
2/12/2020

JMT#: 16260-11

Contents

Description 2
General Information for use of Pacific Shoring Modular Aluminum Buildable Box Sheeting Guide 2
Classification of Soil Types 3
Sheeting Guide Tabulated Data 5
Sheeting Guide Components 6

Description

The Pacific Shoring Modular Buildable Box Sheeting Guide is an aluminum sheet pile guide system that fits in place of one of the buildable box panels. This allows a line of sheet piles to be placed up to and over obstructions such as cross trench lines. The guide frame may be used at one or multiple wall lines. The sheeting can be installed by hand and may be skipped or interlocked provided there is no sloughing or raveling through the cracks. There are filler panels that fit in the corners where the sheeting ends. The sheeting guide frame comes in all lengths that modular panels are available in.

General Information for use of Pacific Shoring Modular Aluminum Buildable Box Sheeting Guide

1. The buildable box sheeting guide attachment shoring system tabulated here is based on requirements of Federal OSHA 29CFR, Part 1926, Subpart P-Excavations, and Trenches

   1926.652(c)(2)-Option (2) - Designs Using Manufacturer's Tabulated Data. 1926.652(c)(2)(i) -Design of support systems, shield systems, or other protective systems that are drawn from manufacturer's tabulated data shall be in accordance with all specifications, recommendations, and limitations issued or made by the manufacturer.

   All provisions of Subpart P apply when utilizing this tabulated data. The contractor's competent person shall use this data to select allowable trench depth, box wall, and strut configuration. The competent person utilizing this tabulated data shall be experienced and knowledgeable of all requirements of Subpart P, and trained in the use and safety procedures for shoring box applications.

2. Use of this tabulated data is dependent on first classifying the soil in accordance with OSHA Appendix A, Soil Classification. Classification shall be just prior to installing the modular shoring box sheeting guide. Soil conditions may change at a later date and require revaluation of the strength and allowable depth.

3. Modular aluminum buildable box sheeting guides are tabulated based on the effect of a 20,000 lb surcharge load set back 2 ft from the edge of the trench and the equivalent weight effect of the OSHA soil type, see classification of soil types, 2.

4. The depth and spacing given governs the use of the Pacific Shoring Buildable Box Sheeting Guide and not tabulations given by other manufacturers. This tabulated data applies to sheeting guides manufactured by Pacific Shoring, LLC; however, all parts are interchangeable with Speed-Shore Modular Aluminum Panel Shields, “MAPS”. Speed-Shore MAPS parts may be interchanged and used with Pacific Shoring Buildable Boxes under this tabulated data. Any alterations to the boxes or variance from this tabulated data shall be indicated in a site-specific plan prepared and approved by a registered engineer.

5. Faces of excavations shall be vertical and the shoring walls shall be within 6" of the excavation wall.

6. Aluminum Buildable Box Sheeting Guides may be used at any location vertically on the box in place of a 2 ft panel section and on any or all sides, (1 side, 2 sides, 3 sides or 4 sides)

7. Aluminum Buildable Box Sheeting Guides shall be installed and removed from outside the trench,

8. The competent person shall continually monitor the shored excavation for changed conditions such as water seepage, soil movement cracks at the surface, sloughing or raveling, proper surcharge load weight less than 20,000 lbs and setback a minimum of 2 ft that may damage the shores.

9. Workers shall always enter, exit, and work inside the shored area of the trench.

10. Aluminum Buildable Boxes may be stacked as long as they are pinned together.

11. Aluminum Buildable Boxes may be set a maximum of 2 ft from the bottom of the excavation. The trench depth is the full distance to the bottom of the excavation.

12. Sheeting is to be pushed in, not pounded.

Classification of Soil Types

1. Soil classification shall be in accordance with OSHA Appendix A and classified just prior to installing hydraulic vertical shores. Soil conditions may change at a later date and require hydraulic vertical shores to be reset at a different spacing.

2. The equivalent weight of OSHA soil types* is assumed to be as follows:

   - OSHA Type "A" Soil — 25 PSF per ft of depth
   - OSHA Type "B" Soil — 45 PSF per ft of depth
   - Type "C-60" Soil — 60 PSF per ft of depth**
   - OSHA Type "C" Soil — 80 PSF per ft of depth

   * These equivalent weights were adapted from OSHA 1926 Subpart P App C, Timber Shoring for Trenches, Tables C-1.1, C-1.2, and C-1.3

   ** Type C-60 soil is not identified or classified in OSHA Appendix A

3. Type C-60 soil is soil that does not qualify as OSHA Type A, or Type B, can be cut with vertical walls and will stand up long enough to safely insert the shoring system.

4. Buildable boxes may be used in C-80 soil provided they are dug into the excavation and not driven into the soil.

Sheeting Guide Tabulated Data

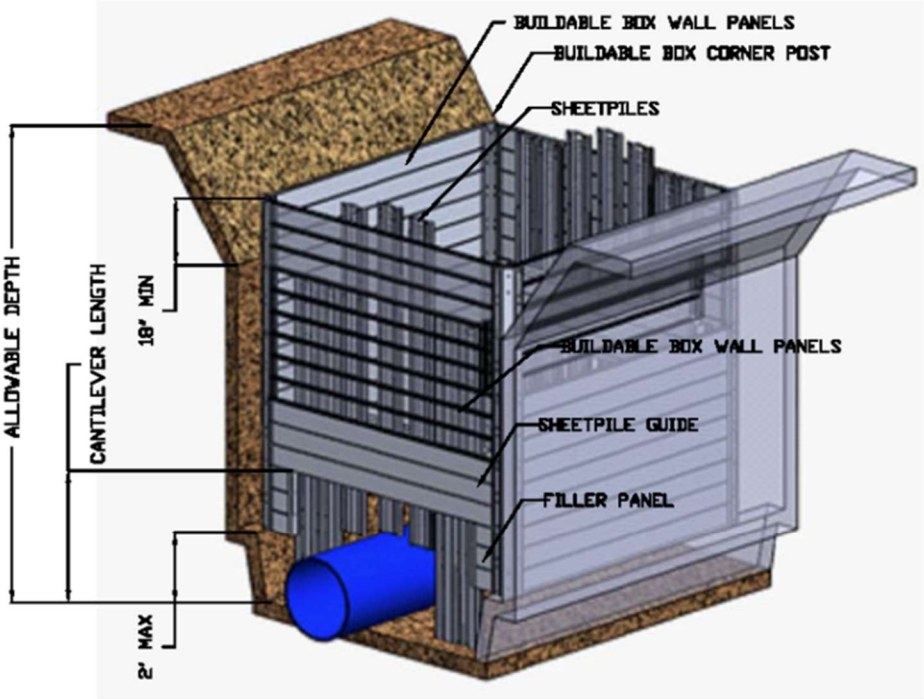

TABULATED DATA-MODULAR ALUMINUM BOX SHEETPILE GUIDE FRAME																					
Guide Frame Capacity and Allowable Depth in OSHA Soil Type																					
Frame		2 ft Toe-In 5 ft clear					4 ft Cantilever					3 ft Cantilever					2 ft Cantilever				
Length (ft)	Weight (lbs)	Capacity (psf)	Allowable Depth (ft) A-25	B-45	C-60	C-80	Capacity (psf)	Allowable Depth (ft) A-25	B-45	C-60	C-80	Capacity (psf)	Allowable Depth (ft) A-25	B-45	C-60	C-80	Capacity (psf)	Allowable Depth (ft) A-25	B-45	C-60	C-80
4	120	700	16	13	10	8	700	16	13	10	8	700	16	13	10	8	960	16	19	14	11
6	170	700	16	13	10	8	700	16	13	10	8	700	16	13	10	8	960	16	19	14	11
8	220	700	16	13	10	8	700	16	13	10	8	700	16	13	10	8	960	16	19	14	11
10	280	700	16	13	10	8	700	16	13	10	8	700	16	13	10	8	960	16	19	14	11
12	330	700	16	13	10	8	700	16	13	10	8	700	16	13	10	8	960	16	19	14	11
14	390	600	16	11	8	6	600	16	13	10	8	600	16	11	8	6	860	16	17	13	10
16	450	500	16	9	7	5	500	16	11	8	6	500	16	9	7	5	500	16	9	7	5

Notes

1. See Modular Aluminum Buildable Box tabulated data for buildable box capacity and allowable depth.
2. Sheetpiles may be skipped maximum 6" provided soil does not slough or ravel. If sloughing or raveling occurs close up the gap until it is prevented.
3. The Sheetpile Guide may be used on any or all sides at any level of a modular aluminum box shoring application.
4. All areas above the sheet pile guide shall be shored with the Modular Aluminum Buildable Box system under the tabulated data for that system.
5. Soil must be identified in accordance with OSHA Subpart P, Appendix A before using this table.
6. A competent person trained and experienced in the use of sheeting guides must be present when using this shoring application in the field.
7. A 1.33 Shoring Use Factor has been used in the development of this tabulated data.
8. Use with full length corner posts.

Sheeting Guide Components

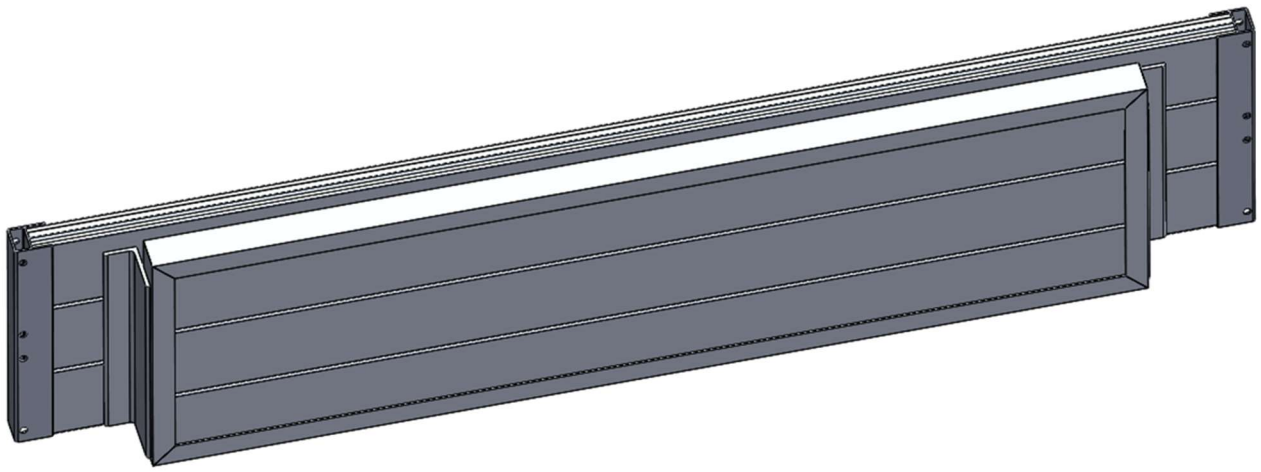

Sheeting Guide

Connects into Buildable Box Corner Posts
Guide Depth 2ft
Guide length 16 ft, 14 ft,12 ft,10 ft,8 ft, 6 ft, 4 ft

Corrugated Sheet

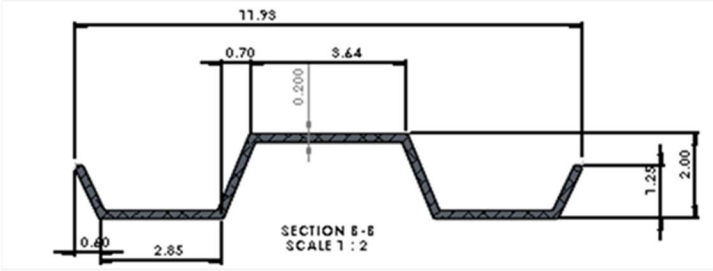

PACIFIC SHORING 2" CORRUGATED SHEET

AREA	3.12 in^2
WEIGHT	3.65 lb/lf
SECTION MODULUS	1.5 in^3
MAXIMUM MOMENT	3.5 k-ft

Filler Block

2 Required per 2 ft length of sheeting cantilever

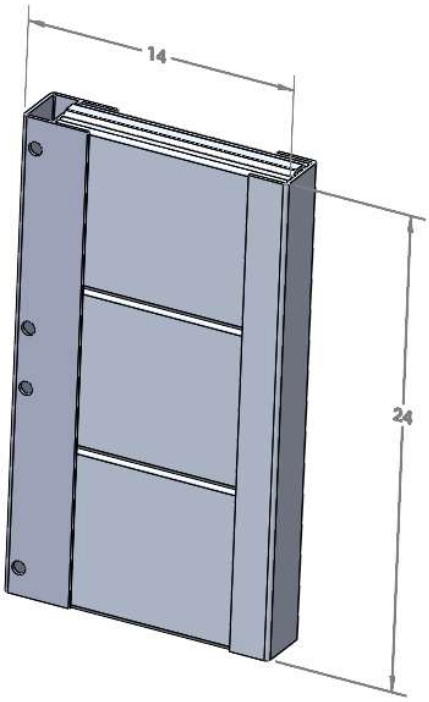

End