vegware™ packaging made from plants

Product spec sheet

Product name Deep Fill 75mm kraft Sandwich Wedge

Product code VWST75



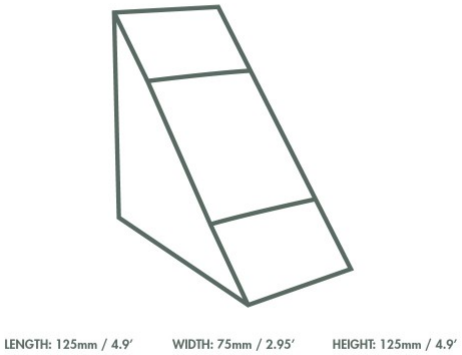

Description	Perfect for hearty meals or sandwiches on the go. Sustainable paperboard with a water-based grease-resistant coating. Plant-based PLA window and leaf-shaped cut-outs on the side offer extra visibility. Brown kraft colour with Vegware messaging in green. Award-winning quality by Vegware, made from plants. Commercially compostable where accepted.

Case count	500
Pack size	500
Packs per case	1
Product Dimensions	Length: 125mm Width: 75mm Height: 125mm Weight: 14g

Case length (mm)	450
Case width (mm)	270
Case depth (mm)	260
Case volume (m^3)	0.032
UK pallet count	45
EU pallet count	42

Gross weight (kg)	8.100
Net weight (kg)	7.600
Outer packing weight (kg)	0.400
Inner packing weight (kg)	0.100
Pack weight (kg)	7.600
EAN number	5056156901383