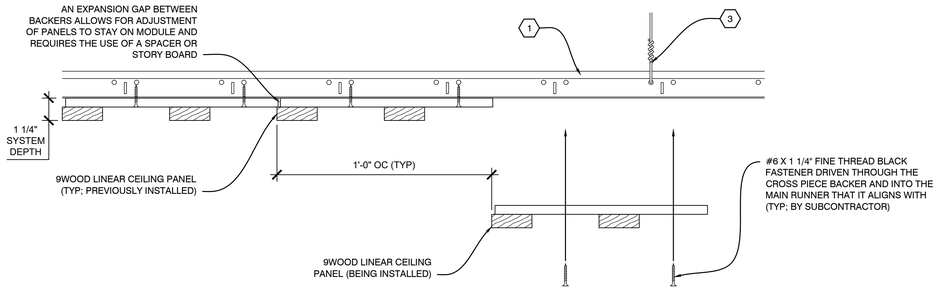

C1 INSTALLATION PROCESS - LINEAR CEILING PANEL

SCALE: 1/4" = 1"

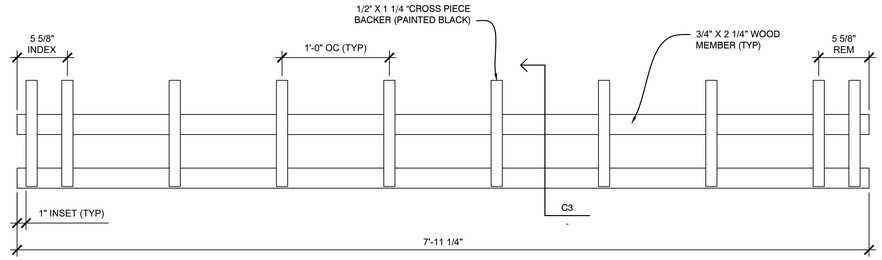

D3 PLAN VIEW - LINEAR CEILING PANEL

SCALE: 1 1/2" = 1'

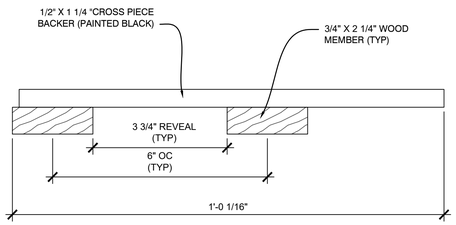

C3 SECTION - LINEAR CEILING PANEL

SCALE: 1/2" = 1"

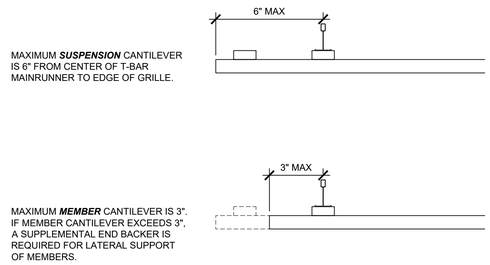

C4 SECTION - CANTILEVER RULES

SCALE: 1/4" = 1"

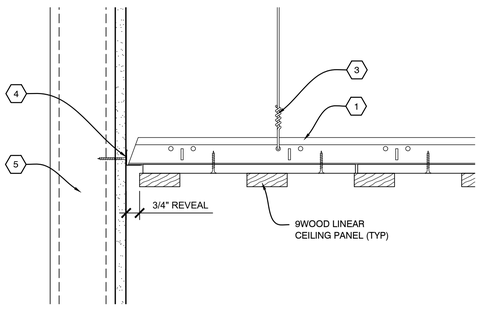

B1 SECTION - PERIMETER

SCALE: 1/4" = 1"

NOTES:
- FIXTURES TO BE INDEPENDENTLY SUPPORTED AND NOT TO BEAR ON 9WOOD CEILING SYSTEM.

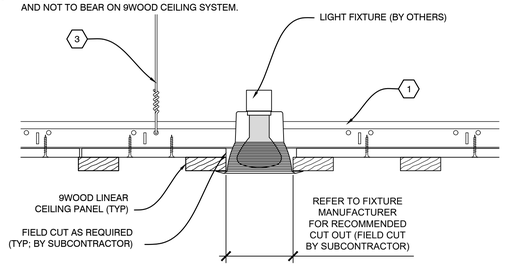

B2 SECTION - LIGHT FIXTURE

SCALE: 1/4" = 1"

NOTES:
- FIXTURES TO BE INDEPENDENTLY SUPPORTED AND NOT TO BEAR ON 9WOOD CEILING SYSTEM.

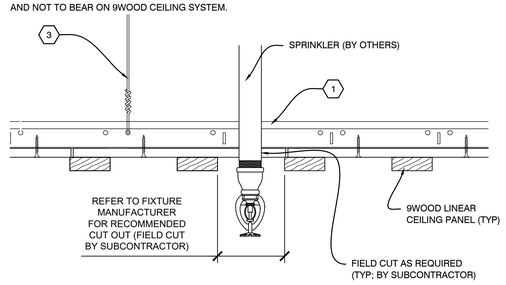

B3 SECTION - SPRINKLER

SCALE: 1/4" = 1"

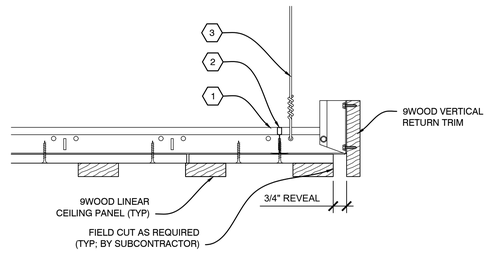

B4 SECTION - PERIMETER

SCALE: 1/4" = 1"

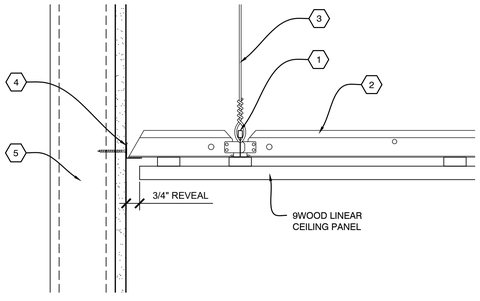

A1 SECTION - PERIMETER

SCALE: 1/4" = 1"

NOTES:
- FIXTURES TO BE INDEPENDENTLY SUPPORTED AND NOT TO BEAR ON 9WOOD CEILING SYSTEM.

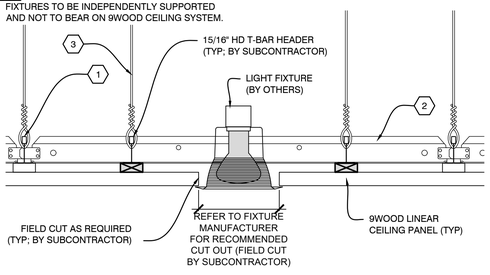

A2 SECTION - LIGHT FIXTURE

SCALE: 1/4" = 1"

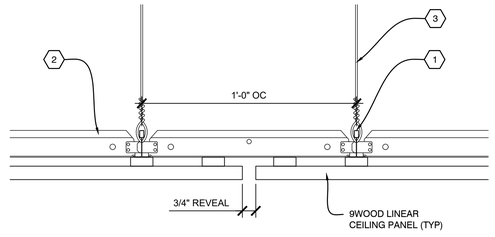

A3 SECTION - ABUTTING REVEAL

SCALE: 1/4" = 1"

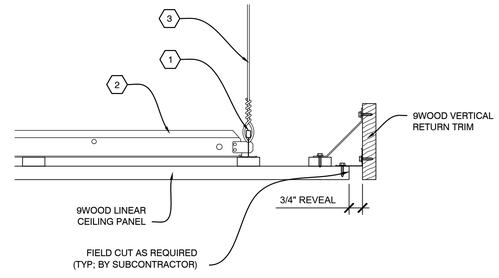

A4 SECTION - PERIMETER

SCALE: 1/4" = 1"

9 WOOD
Custom made fast

999 SOUTH A STREET
SPRINGFIELD, OR 97477

TOLL-FREE 888.767.9990
FACSIMILE 888.767.9998

WWW.9WOOD.COM
ENGINEERING@9WOOD.COM

FSC CERTIFIED PROJECT: YES ☐ NO ☑

PROJECT

PROJECT NUMBER:
PROPOSAL NUMBER:

REVISION HISTORY

REV#	DATE	DESCRIPTION
10		
9		
8		
7		
6		
5		
4		
3		
2		
1		
0	08.28.25	RELEASE FOR APPROVAL'S

SHEET INFORMATION

DRAWING TYPE: SHOP DRAWINGS
DRAWN BY: BLH
STANDARDS REVIEW: RAC
TECHNICAL REVIEW: RAC

THIS DOCUMENT CONTAINS PROPRIETARY INFORMATION OF 9WOOD, INC.
COPYRIGHT © 2025 9WOOD, INC.
ALL RIGHTS RESERVED.

KEY NOTES

1. 15/16" HEAVY DUTY T-BAR MAIN RUNNER (TYP; BY SUBCONTRACTOR)
2. 15/16" T-BAR CROSS TEE (TYP; BY SUBCONTRACTOR)
3. HANGER WIRE (TYP; BY SUBCONTRACTOR)
4. WALL ANGLE AND APPROPRIATE INSTALLATION FASTENER (TYP; BY SUBCONTRACTOR)
5. PERIMETER CONDITION (TYP; BY OTHERS)

SHEET TITLE

SYSTEM DETAILS

Z-501