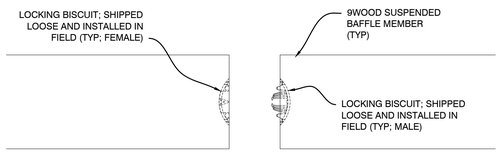

C1 DETAIL - LOCKING BISCUIT JOINT
SCALE: 1/2" = 1"

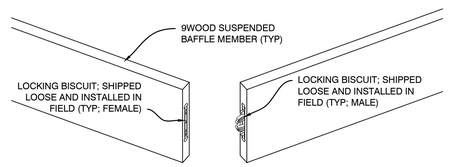

C2 DETAIL - LOCKING BISCUIT JOINT
SCALE: 1/2" = 1"

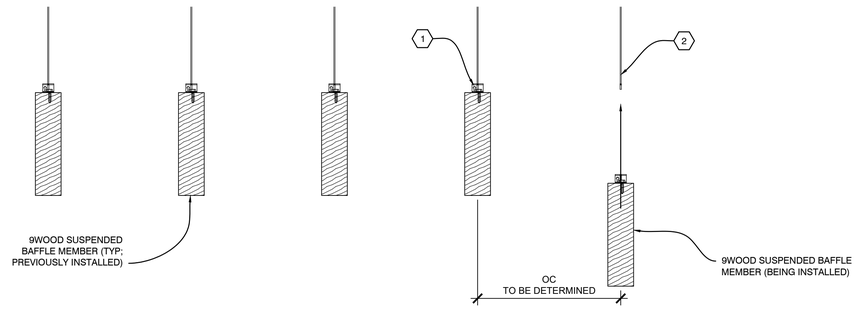

C3 INSTALLATION PROCESS - BAFFLE CEILING SYSTEM
SCALE: 1/4" = 1"

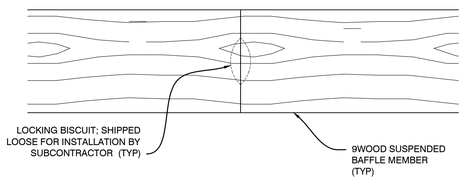

B1 SECTION - ABUTTING MEMBERS
SCALE: 1/4" = 1"

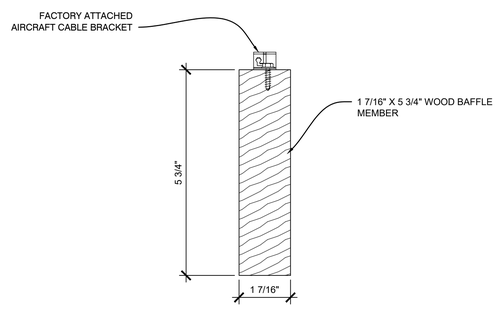

B2 SECTION - WOOD BAFFLE
SCALE: 1/2" = 1"

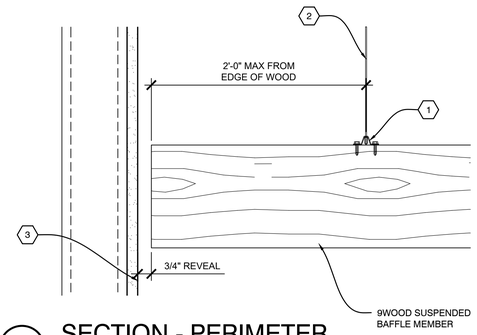

B3 SECTION - PERIMETER
SCALE: 1/4" = 1"

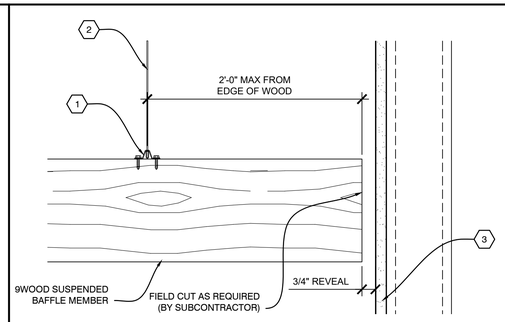

B4 SECTION - PERIMETER
SCALE: 1/4" = 1"

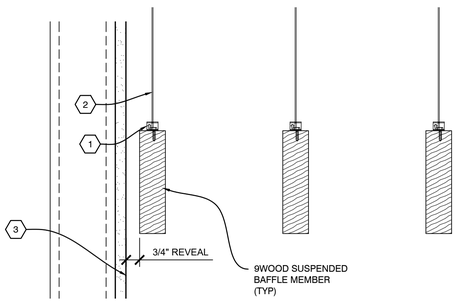

A1 SECTION - PERIMETER
SCALE: 1/4" = 1"

NOTES:

- FIXTURES TO BE INDEPENDENTLY SUPPORTED AND NOT TO BEAR ON 9WOOD CEILING SYSTEM.

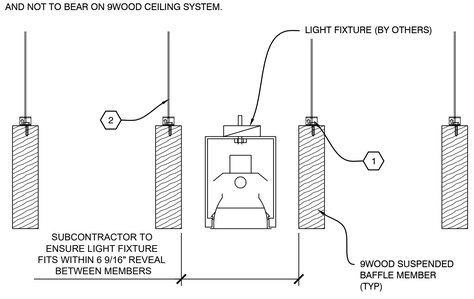

A2 SECTION - LIGHT FIXTURE
SCALE: 1/4" = 1"

NOTES:

- FIXTURES TO BE INDEPENDENTLY SUPPORTED AND NOT TO BEAR ON 9WOOD CEILING SYSTEM.

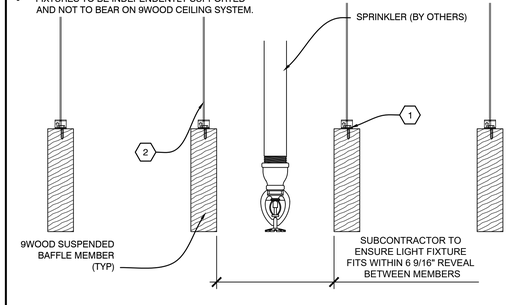

A3 SECTION - SPRINKLER
SCALE: 1/4" = 1"

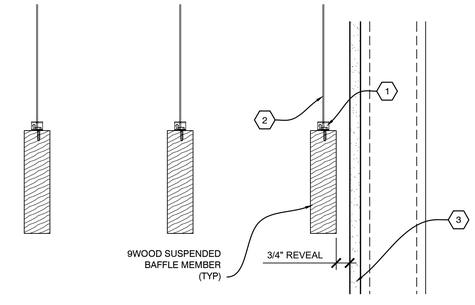

A4 SECTION - PERIMETER
SCALE: 1/4" = 1"

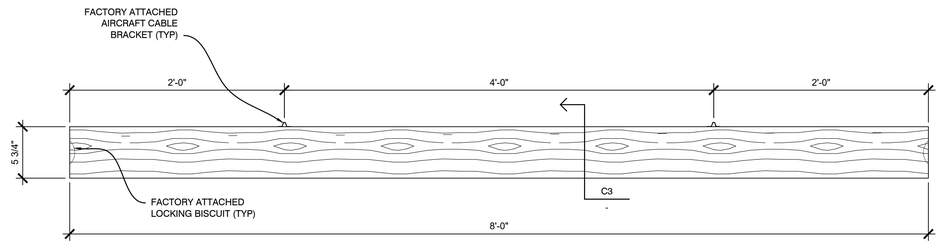

D3 SIDE VIEW - WOOD BAFFLE "1.8"
SCALE: 1 1/2" = 1'

9WOOD
CUSTOM MADE FAST

999 SOUTH A STREET
SPRINGFIELD, OR 97477

TOLL-FREE 888.767.9990
FACSIMILE 888.767.9998

WWW.9WOOD.COM
ENGINEERING@9WOOD.COM

PROJECT CERTIFICATIONS: YES ☐ NO ☑

PROJECT

PROJECT NAME

PROJECT LOCATION

PROJECT NUMBER:
PROPOSAL NUMBER:

REVISION HISTORY

REV#	DATE	DESCRIPTION
10		
9		
8		
7		
6		
5		
4		
3		
2		
1		
0	10.14.25	RELEASE FOR APPROVALS

SHEET INFORMATION

DRAWING TYPE: SHOP DRAWINGS
DRAWN BY: RMG
STANDARDS REVIEW: JKH
TECHNICAL REVIEW: RAC

THIS DOCUMENT CONTAINS PROPRIETARY INFORMATION OF 9WOOD, INC.
COPYRIGHT © 2025 9WOOD, INC.
ALL RIGHTS RESERVED.

KEY NOTES

1. FACTORY ATTACHED AIRCRAFT CABLE BRACKET (TYP)
2. AIRCRAFT CABLE WITH FACTORY ATTACHED BALL ENDING (TYP; SHIPPED LOOSE AND INSTALLED IN FIELD BY SUBCONTRACTOR)
3. PERIMETER CONDITION (TYP; BY OTHERS)

SHEET TITLE

SYSTEM DETAILS

Z-501
SHEET 3 OF 3

PATH AND FILENAME: 9WOOD-LOCK-PLATE-SHARED-BRAKPW PRODUCTS (EXTERIOR VERS 1) TRIM KITS SHOP DRAWINGS 1000 BAFFLE AIRCRAFT CABLE AUTOCAD DRAWINGS 1.0.0R 1 - 1.4375 X 5.75.DWG
PLOT STYLES: Monochrome.ctb ACAD VERSION: AutoCAD 2018 (LMS Tech) PLOTTED BY: Ryan Gordon PAPER SIZE: 24.00 X 36.00 PLOTTED: Oct 14, 2025