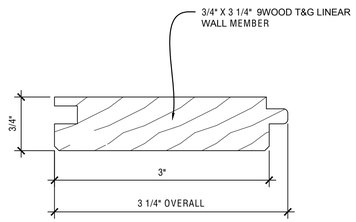

B1 SECTION - T&G KERF REVEAL LINEAR MEMBER
SCALE: 1" = 1"

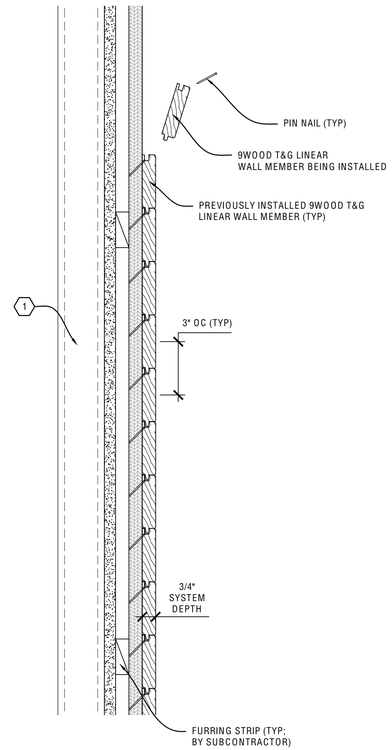

B3 INSTALLATION PROCESS - T&G KERF REVEAL LINEAR MEMBER
SCALE: 1/4" = 1"

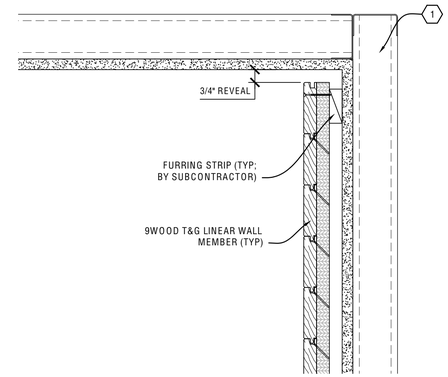

C4 SECTION - CEILING PERIMETER
SCALE: 1/4" = 1"

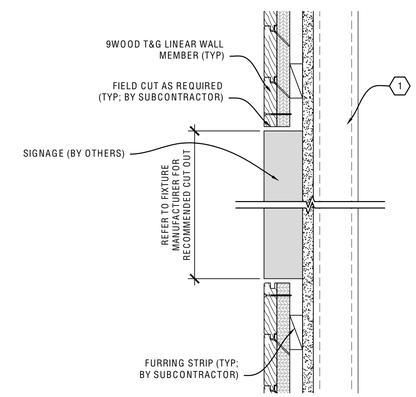

B4 SECTION - WALL PENETRATION
SCALE: 1" = 1"

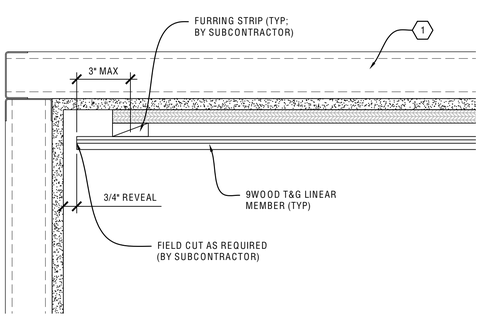

A1 SECTION - PERIMETER
SCALE: 1" = 1"

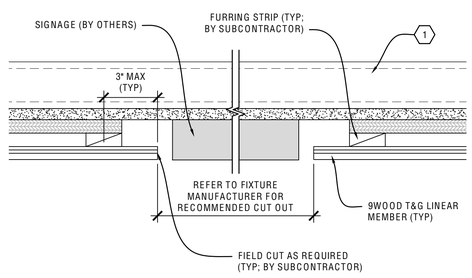

A2 SECTION - WALL PENETRATION
SCALE: 1/4" = 1"

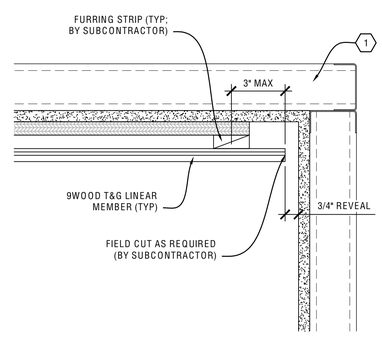

A3 SECTION - PERIMETER
SCALE: 1" = 1"

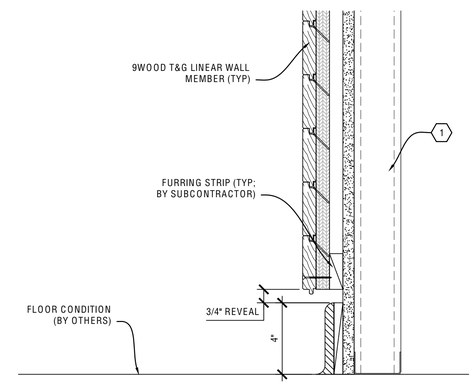

A4 SECTION - FLOOR PERIMETER
SCALE: 1/4" = 1"

9WOOD
CUSTOM MADE FAST
999 SOUTH A STREET
SPRINGFIELD, OR 97477
TOLL-FREE 888.767.9990
FACSIMILE 888.767.9998
WWW.9WOOD.COM
ENGINEERING@9WOOD.COM

PROJECT CERTIFICATIONS: YES ☐ NO ☒

PROJECT

PROJECT NUMBER:
PROPOSAL NUMBER:

REVISION HISTORY

REV#	DATE	DESCRIPTION
10		
9		
8		
7		
6		
5		
4		
3		
2		
1		
0	09.30.25	RELEASE FOR APPROVALS

SHEET INFORMATION

DRAWING TYPE: SHOP DRAWINGS
DRAWN BY: CAA
STANDARDS REVIEW: RAC
TECHNICAL REVIEW: RAC

THIS DOCUMENT CONTAINS PROPRIETARY INFORMATION OF 9WOOD, INC.
© 2025 9WOOD, INC.
ALL RIGHTS RESERVED.

KEY NOTES

1 PERIMETER CONDITION (TYP; BY OTHERS)

SHEET TITLE

SYSTEM DETAILS

Z-501
SHEET 3 OF 3