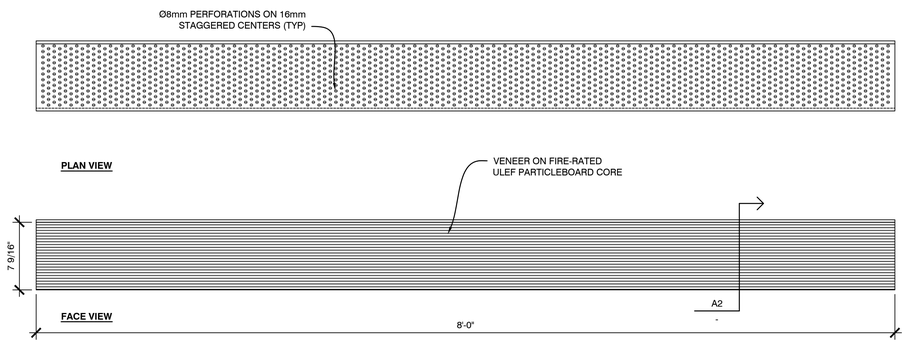

C1 PLAN AND FACE VIEW - ACOUSTIC PLANK

SCALE: 1 1/2" = 1'

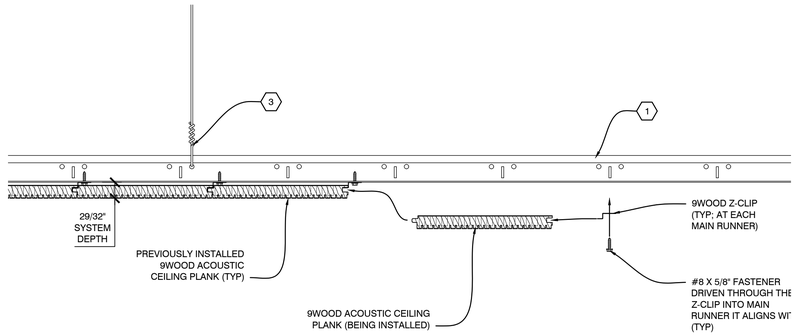

C3 INSTALLATION PROCESS - ACOUSTIC CEILING PLANK

SCALE: 1/4" = 1"

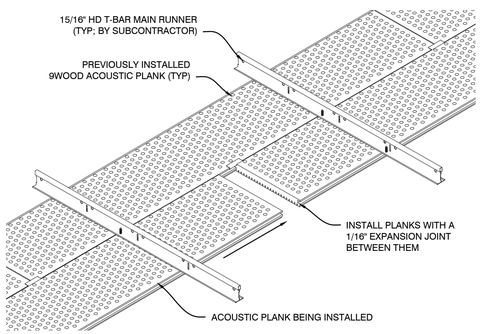

A1 ISO VIEW - ABUTTING PLANKS

SCALE: NOT TO SCALE

NOTES:
- DETAIL TO BE USED WHERE APPLICABLE.

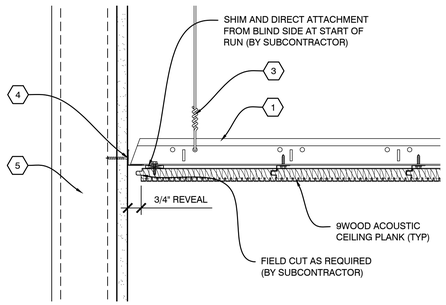

B2 SECTION - PERIMETER

SCALE: 1/4" = 1"

NOTES:
- DETAIL TO BE USED WHERE APPLICABLE.
- FIXTURES TO BE INDEPENDENTLY SUPPORTED AND NOT TO BEAR ON 9WOOD CEILING SYSTEM.

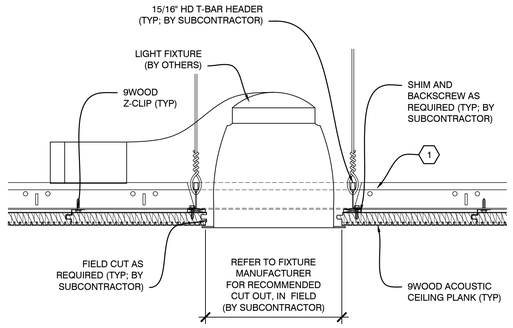

B3 SECTION - LIGHT FIXTURE

SCALE: 1/4" = 1"

NOTES:
- DETAIL TO BE USED WHERE APPLICABLE.
- FIXTURES TO BE INDEPENDENTLY SUPPORTED AND NOT TO BEAR ON 9WOOD CEILING SYSTEM.

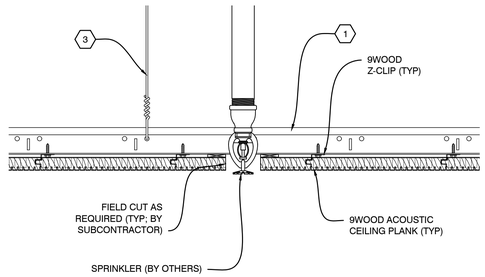

B4 SECTION - SPRINKLER

SCALE: 1/4" = 1"

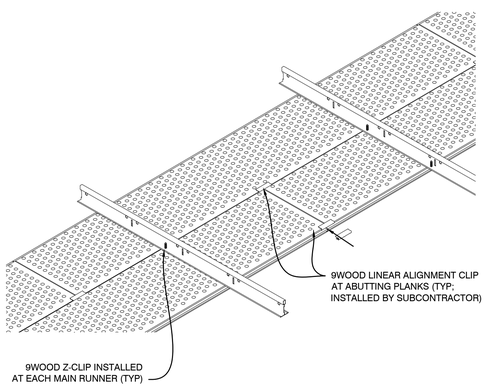

A1 ISO VIEW - ABUTTING PLANKS

SCALE: NOT TO SCALE

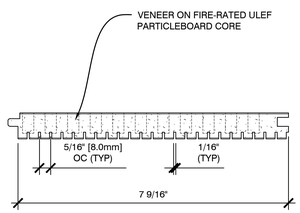

A2 SECTION - ACOUSTIC PLANK

SCALE: 1/2" = 1"

NOTES:
- DETAIL TO BE USED WHERE APPLICABLE.

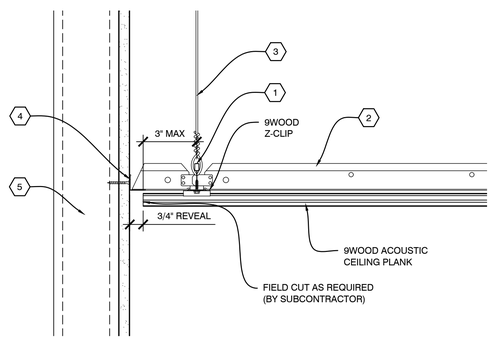

A3 SECTION - PERIMETER

SCALE: 1/4" = 1"

NOTES:
- DETAIL TO BE USED WHERE APPLICABLE.
- FIXTURES TO BE INDEPENDENTLY SUPPORTED AND NOT TO BEAR ON 9WOOD CEILING SYSTEM.

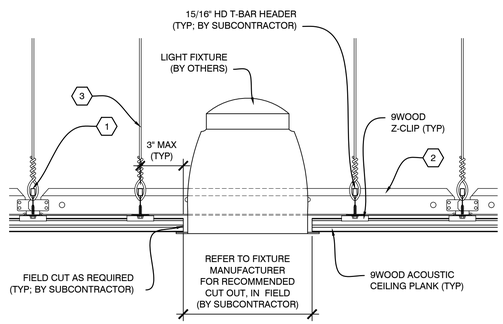

A4 SECTION -LIGHT FIXTURE

SCALE: 1/4" = 1"

9WOOD

CUSTOM MADE FAST

999 SOUTH A STREET
SPRINGFIELD, OR 97477

TOLL-FREE 888.767.9990
FACSIMILE 888.767.9998

WWW.9WOOD.COM
ENGINEERING@9WOOD.COM

PROJECT CERTIFICATIONS: YES ☐ NO ☑

PROJECT

PROJECT NUMBER:
PROPOSAL NUMBER:

REVISION HISTORY

REV#	DATE	DESCRIPTION
10		
9		
8		
7		
6		
5		
4		
3		
2		
1		
0	09/30/25	RELEASE FOR APPROVAL'S

SHEET INFORMATION

DRAWING TYPE: SHOP DRAWINGS
DRAWN BY: JBH & NWC
STANDARDS REVIEW: RAC
TECHNICAL REVIEW: RAC

THIS DOCUMENT CONTAINS PROPRIETARY INFORMATION OF 9WOOD, INC.
COPYRIGHT © 2025 9WOOD, INC.
ALL RIGHTS RESERVED.

KEY NOTES

1. 15/16" HEAVY DUTY T-BAR MAIN RUNNER (TYP; BY SUBCONTRACTOR)
2. 15/16" T-BAR CROSS TEE (TYP; BY SUBCONTRACTOR)
3. HANGER WIRE (TYP; BY SUBCONTRACTOR)
4. WALL ANGLE AND APPROPRIATE INSTALLATION FASTENER (TYP; BY SUBCONTRACTOR)
5. PERIMETER CONDITION (TYP; BY OTHERS)

SHEET TITLE

SYSTEM DETAILS

Z-501

SHEET 3 OF 3

PATH AND FILENAME: S:\9WOOD\Projects\9WOOD 3D\9WOOD INSTALLATION SHOP DRAWINGS\9WOOD ACOUSTIC PLANKS\ACTIVE\9WOOD ACOUSTIC PLANK REF ACOUSTIC PLANK 9WOOD SHOP DRAWING.DWG
DATE/TIME: Thursday, October 09, 2025 10:09:49 AM PDT, 2025 - 10:09:49 AM PDT

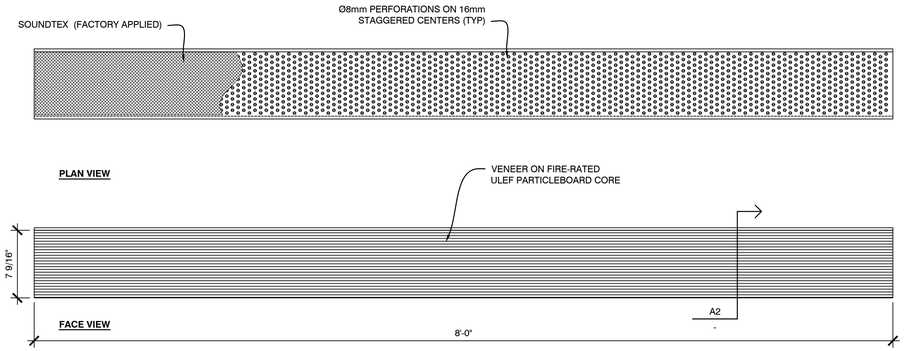

C1 PLAN AND FACE VIEW - ACOUSTIC PLANK

SCALE: 1 1/2" = 1'

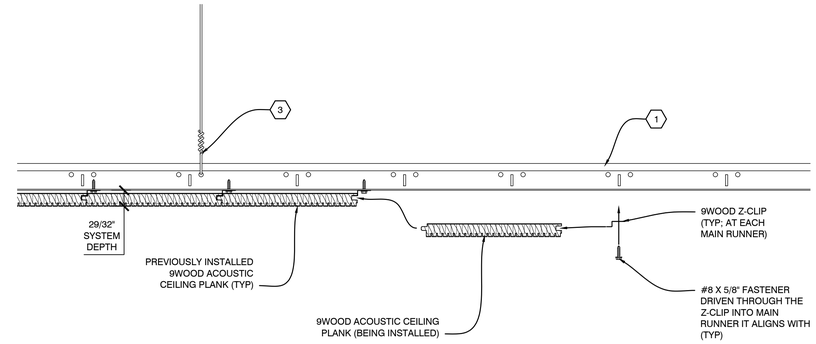

C3 INSTALLATION PROCESS - ACOUSTIC CEILING PLANK

SCALE: 1/4" = 1"

NOTES:
- SOUNDTEX NOT SHOWN FOR CLARITY.

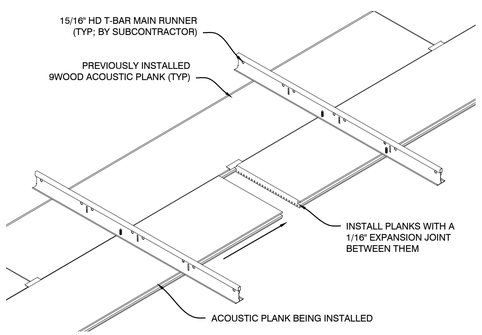

A1 ISO VIEW - ABUTTING PLANKS

SCALE: NOT TO SCALE

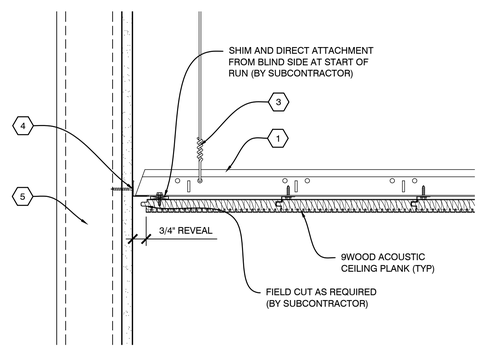

B2 SECTION - PERIMETER

SCALE: 1/4" = 1"

NOTES:
- DETAIL TO BE USED WHERE APPLICABLE.
- FIXTURES TO BE INDEPENDENTLY SUPPORTED AND NOT TO BEAR ON 9WOOD CEILING SYSTEM.

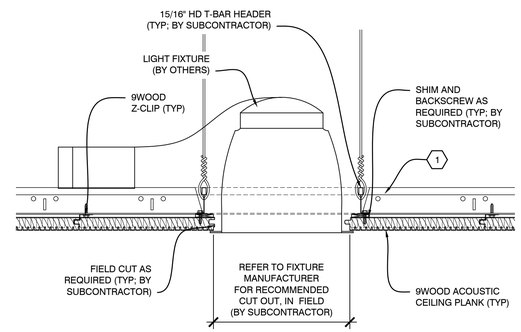

B3 SECTION - LIGHT FIXTURE

SCALE: 1/4" = 1"

NOTES:
- DETAIL TO BE USED WHERE APPLICABLE.
- FIXTURES TO BE INDEPENDENTLY SUPPORTED AND NOT TO BEAR ON 9WOOD CEILING SYSTEM.

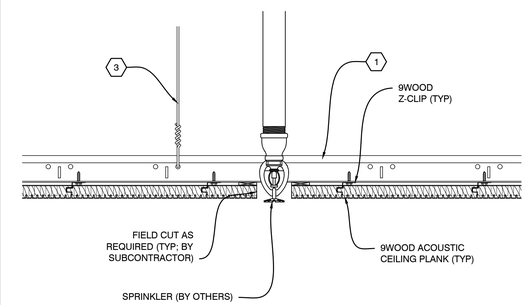

B4 SECTION - SPRINKLER

SCALE: 1/4" = 1"

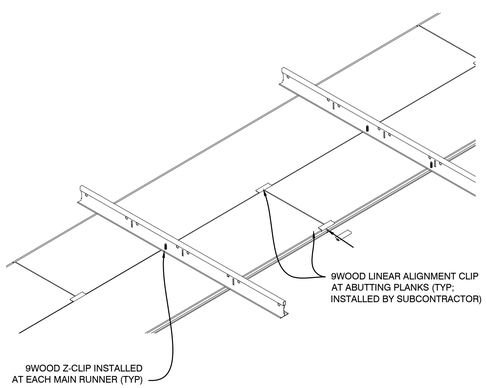

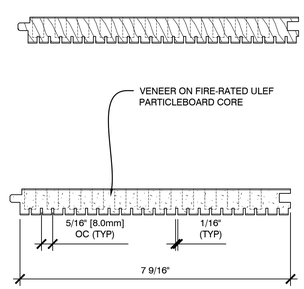

A2 SECTION - ACOUSTIC PLANK

SCALE: 1/2" = 1"

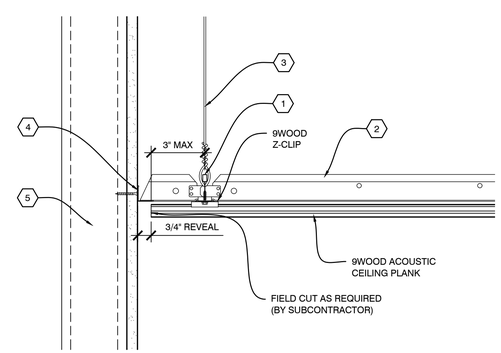

A3 SECTION - PERIMETER

SCALE: 1/4" = 1"

NOTES:
- DETAIL TO BE USED WHERE APPLICABLE.
- FIXTURES TO BE INDEPENDENTLY SUPPORTED AND NOT TO BEAR ON 9WOOD CEILING SYSTEM.

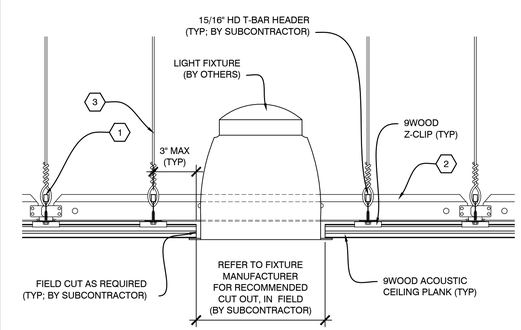

A4 SECTION -LIGHT FIXTURE

SCALE: 1/4" = 1"

9WOOD

CUSTOM MADE FAST

999 SOUTH A STREET
SPRINGFIELD, OR 97477

TOLL-FREE 888.767.9990
FACSIMILE 888.767.9998

WWW.9WOOD.COM
ENGINEERING@9WOOD.COM

PROJECT CERTIFICATIONS: YES ☐ NO ☑

PROJECT

PROJECT NUMBER:
PROPOSAL NUMBER:

REVISION HISTORY

REV#	DATE	DESCRIPTION
10		
9		
8		
7		
6		
5		
4		
3		
2		
1		
0	09/30/25	RELEASE FOR APPROVAL'S

SHEET INFORMATION

DRAWING TYPE: SHOP DRAWINGS
DRAWN BY: JBH & NWC
STANDARDS REVIEW: RAC
TECHNICAL REVIEW: RAC

THIS DOCUMENT CONTAINS PROPRIETARY INFORMATION OF 9WOOD, INC.
COPYRIGHT © 2025 9WOOD, INC.
ALL RIGHTS RESERVED.

KEY NOTES

1. 15/16" HEAVY DUTY T-BAR MAIN RUNNER (TYP; BY SUBCONTRACTOR)
2. 15/16" T-BAR CROSS TEE (TYP; BY SUBCONTRACTOR)
3. HANGER WIRE (TYP; BY SUBCONTRACTOR)
4. WALL ANGLE AND APPROPRIATE INSTALLATION FASTENER (TYP; BY SUBCONTRACTOR)
5. PERIMETER CONDITION (TYP; BY OTHERS)

SHEET TITLE

SYSTEM DETAILS

Z-501

PATH AND FILENAME: S:\BRAND\4 PRODUCTS (CUSTOMER VER)\1 TEMPLATE SHOP DRAWINGS\02-1AC-ACOUSTIC PLANK\ARCHDESIGN\2-EACH PER#-ACOUSTIC PLANK 9WOOD SHOP DRAWING.DWG
PLOTTED: Thursday, October 30, 2025 1:09:00 PM, EDT BY: JBH, JBH, INSTALLER, INSTALLER, INSTALLER