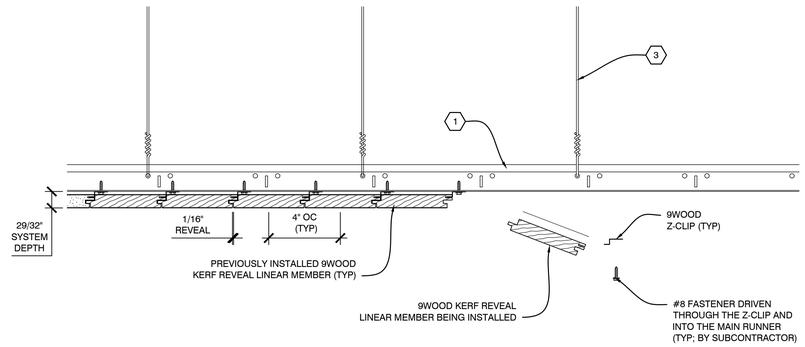

C3 INSTALLATION PROCESS - LINEAR LINEAR WOOD MEMBER

SCALE: 1/4" = 1"

0 2" 4" 8"

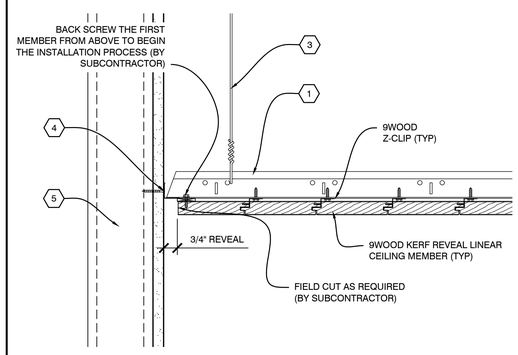

B2 SECTION - PERIMETER

SCALE: 1/4" = 1"

0 2" 4" 8"

NOTES:

- DETAIL TO BE USED WHERE APPLICABLE.
- FIXTURES TO BE INDEPENDENTLY SUPPORTED AND NOT TO BEAR ON 9WOOD CEILING SYSTEM.

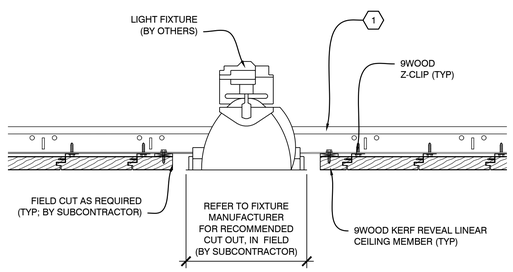

B3 SECTION - LIGHT FIXTURE

SCALE: 1/4" = 1"

0 2" 4" 8"

NOTES:

- DETAIL TO BE USED WHERE APPLICABLE.
- FIXTURES TO BE INDEPENDENTLY SUPPORTED AND NOT TO BEAR ON 9WOOD CEILING SYSTEM.

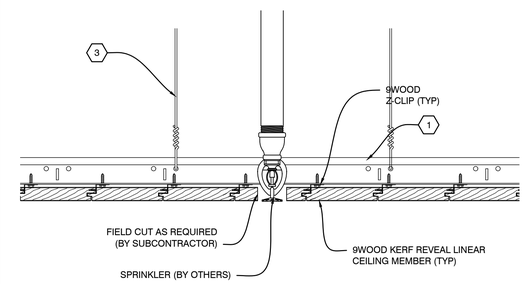

B4 SECTION - SPRINKLER

SCALE: 1/4" = 1"

0 2" 4" 8"

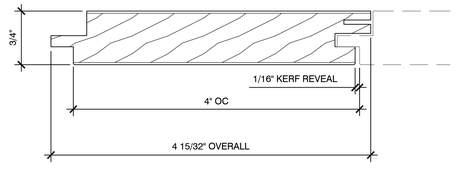

A2 SECTION - FLUSH JOINT LINEAR MEMBER

SCALE: 1" = 1"

0 1" 2"

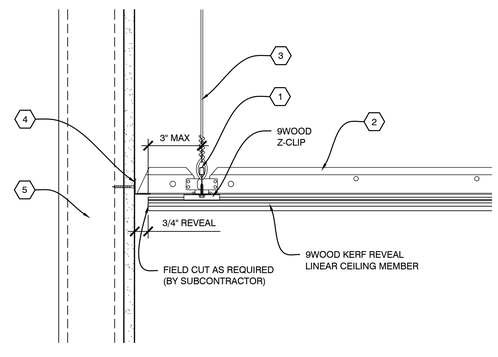

A3 SECTION - PERIMETER

SCALE: 1/4" = 1"

0 2" 4" 8"

NOTES:

- DETAIL TO BE USED WHERE APPLICABLE.
- FIXTURES TO BE INDEPENDENTLY SUPPORTED AND NOT TO BEAR ON 9WOOD CEILING SYSTEM.

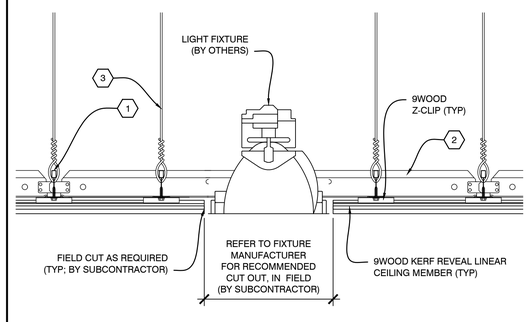

A4 SECTION - LIGHT FIXTURE

SCALE: 1/4" = 1"

0 2" 4" 8"

9 WOOD
Custom made fast

999 SOUTH A STREET
SPRINGFIELD, OR 97477

TOLL-FREE 888.767.9990
FACSIMILE 888.767.9998

WWW.9WOOD.COM
ENGINEERING@9WOOD.COM

PROJECT CERTIFICATIONS: YES ☐ NO ☑

PROJECT

PROJECT NUMBER:

PROPOSAL NUMBER:

REVISION HISTORY

REV#	DATE	DESCRIPTION
10		
9		
8		
7		
6		
5		
4		
3		
2		
1		
0		RELEASE FOR APPROVAL'S

SHEET INFORMATION

DRAWING TYPE: SHOP DRAWING

DRAWN BY: DMS

STANDARDS REVIEW: RAC

TECHNICAL REVIEW: RAC

THIS DOCUMENT CONTAINS PROPRIETARY INFORMATION OF 9WOOD, INC.
COPYRIGHT © 2025 9WOOD, INC.
ALL RIGHTS RESERVED.

KEY NOTES

1. 15/16" HEAVY DUTY T-BAR MAIN RUNNER (TYP; BY SUBCONTRACTOR)
2. 15/16" T-BAR CROSS TEE (TYP; BY SUBCONTRACTOR)
3. HANGER WIRE (TYP; BY SUBCONTRACTOR)
4. WALL ANGLE AND APPROPRIATE INSTALLATION FASTENER (TYP; BY SUBCONTRACTOR)
5. PERIMETER CONDITION (TYP; BY OTHERS)

SHEET TITLE

SYSTEM DETAILS

Z-501

SHEET 3 OF 3

PATH AND FILENAME: S:\BRAFON PROJECTS (EXTERNAL WRK)\1 TEMPLATE SHOP DRAWINGS\CAD\BE REVEAL\BRAFON SHOP DRAWINGS\BRAFON REVEAL LINEARS\SYSTEM DETAILS - 75 X 42.DWG
PLOTTED BY: Dylan Mitchell-Sanders LAST PLOTTED: Jun 18, 2025 - 10:19AM PLOT SCALE: 1:1 DWG ORIENTATION: Model