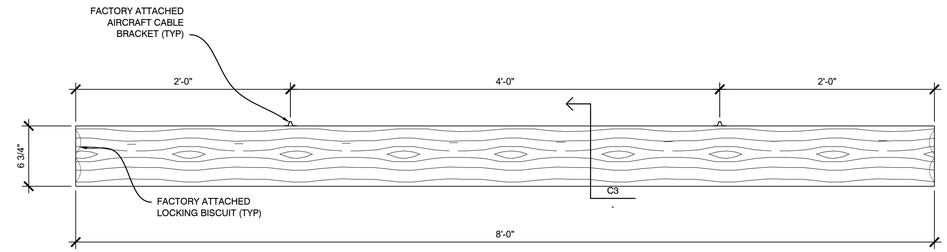

D3 SIDE VIEW - WOOD BAFFLE "1.8"
SCALE: 1 1/2" = 1'

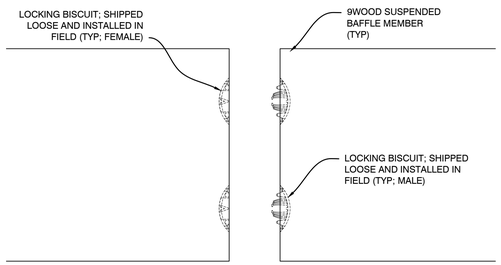

C1 DETAIL - LOCKING BISCUIT JOINT
SCALE: 1/2" = 1"

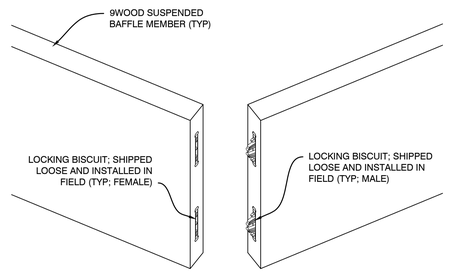

C2 DETAIL - LOCKING BISCUIT JOINT
SCALE: 1/2" = 1"

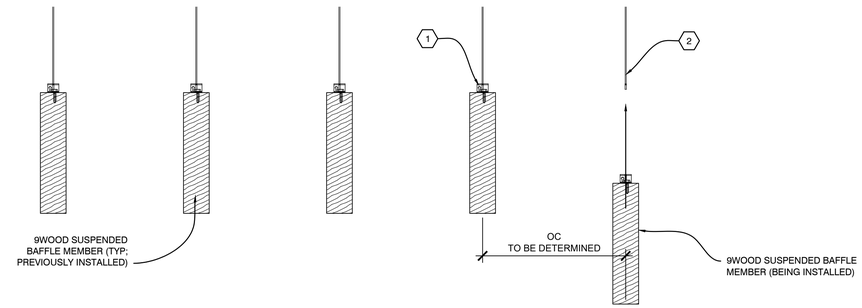

C3 INSTALLATION PROCESS - BAFFLE CEILING SYSTEM
SCALE: 1/4" = 1"

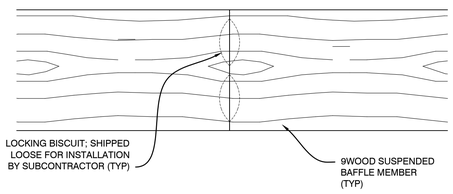

B1 SECTION - ABUTTING MEMBERS
SCALE: 1/4" = 1"

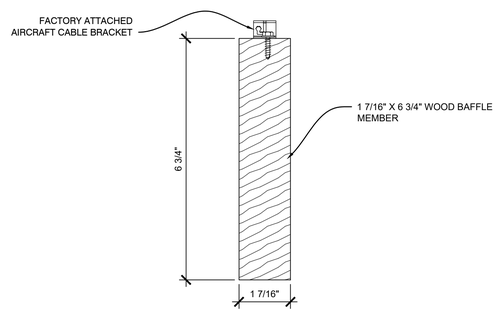

B2 SECTION - WOOD BAFFLE
SCALE: 1/2" = 1"

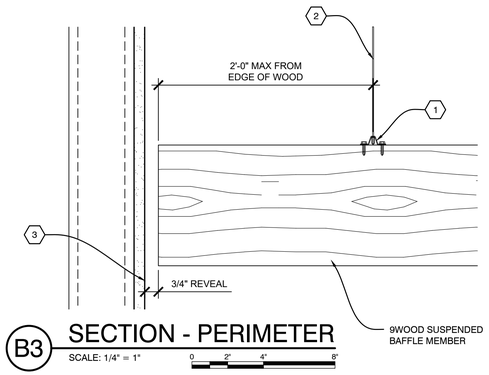

B3 SECTION - PERIMETER
SCALE: 1/4" = 1"

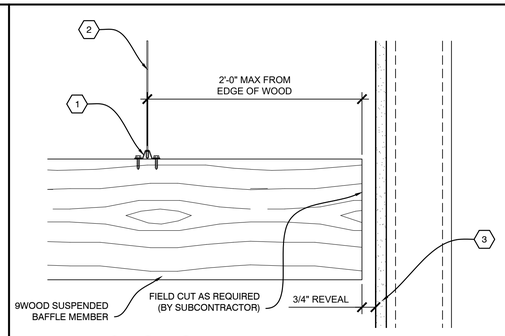

B4 SECTION - PERIMETER
SCALE: 1/4" = 1"

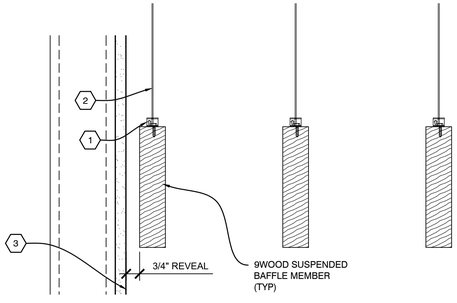

A1 SECTION - PERIMETER
SCALE: 1/4" = 1"

NOTES:
- FIXTURES TO BE INDEPENDENTLY SUPPORTED AND NOT TO BEAR ON 9WOOD CEILING SYSTEM.

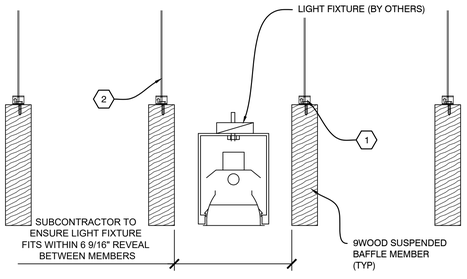

A2 SECTION - LIGHT FIXTURE
SCALE: 1/4" = 1"

NOTES:
- FIXTURES TO BE INDEPENDENTLY SUPPORTED AND NOT TO BEAR ON 9WOOD CEILING SYSTEM.

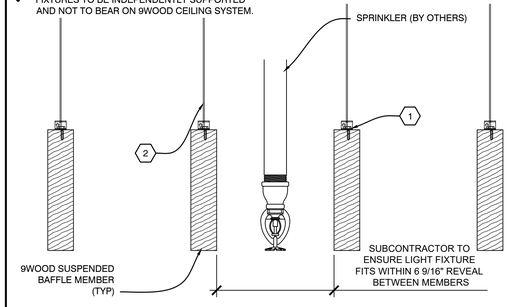

A3 SECTION - SPRINKLER
SCALE: 1/4" = 1"

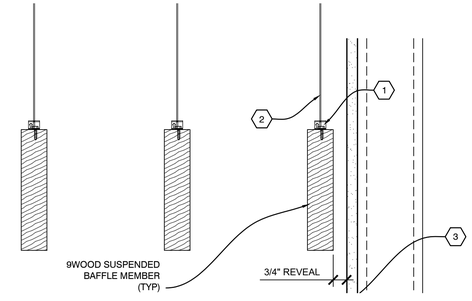

A4 SECTION - PERIMETER
SCALE: 1/4" = 1"

9WOOD
CUSTOM MADE FAST

999 SOUTH A STREET
SPRINGFIELD, OR 97477

TOLL-FREE 888.767.9990
FACSIMILE 888.767.9998

WWW.9WOOD.COM
ENGINEERING@9WOOD.COM

PROJECT CERTIFICATIONS: YES ☐ NO ☑

PROJECT

PROJECT NAME
PROJECT LOCATION

PROJECT NUMBER:
PROPOSAL NUMBER:

REVISION HISTORY

REV#	DATE	DESCRIPTION
10		
9		
8		
7		
6		
5		
4		
3		
2		
1		
0	10.14.25	RELEASE FOR APPROVALS

SHEET INFORMATION

DRAWING TYPE: SHOP DRAWINGS
DRAWN BY: RMG
STANDARDS REVIEW: JKH
TECHNICAL REVIEW: RAC

THIS DOCUMENT CONTAINS PROPRIETARY INFORMATION OF 9WOOD, INC.
COPYRIGHT © 2025 9WOOD, INC.
ALL RIGHTS RESERVED.

KEY NOTES

1. FACTORY ATTACHED AIRCRAFT CABLE BRACKET (TYP)
2. AIRCRAFT CABLE WITH FACTORY ATTACHED BALL ENDING (TYP; SHIPPED LOOSE AND INSTALLED IN FIELD BY SUBCONTRACTOR)
3. PERIMETER CONDITION (TYP; BY OTHERS)

SHEET TITLE

SYSTEM DETAILS

Z-501
SHEET 3 OF 3

PATH AND FILENAME: 9WOOD-LOCK-FLS-SHARED-LIBRARY-M PRODUCTS (EXTERIOR VIEW) 1 TRIM KITS SHOP DRAWINGS 1000 BAFFLE AIRCRAFT CABLE AUTOCAD DRAWINGS 1.8D1 - 1.4STS X 6 X SL.DWG
PLOT STYLES: Screen,Grey,Black AND 1STEP 1STEP AND 1STEP AND 1STEP AND