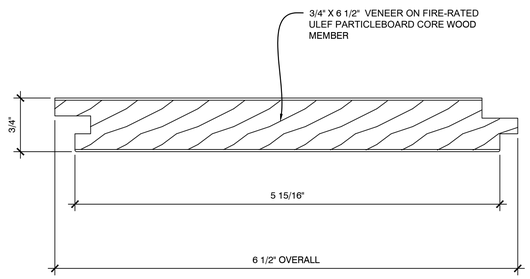

B1 SECTION - T&G KERF REVEAL LINEAR MEMBER
SCALE: 1" = 1"

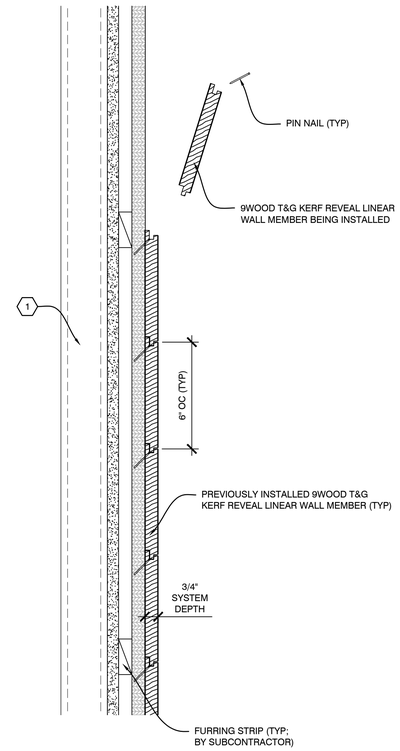

B3 INSTALLATION PROCESS - T&G KERF REVEAL LINEAR MEMBER
SCALE: 1/4" = 1"

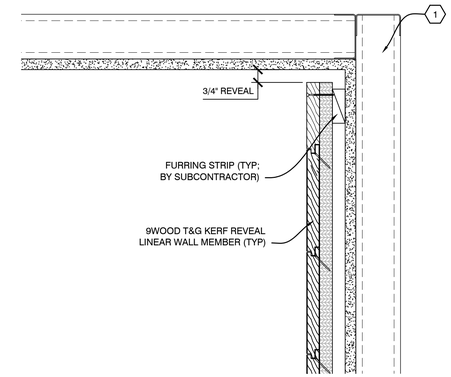

C4 SECTION - CEILING PERIMETER
SCALE: 1/4" = 1"

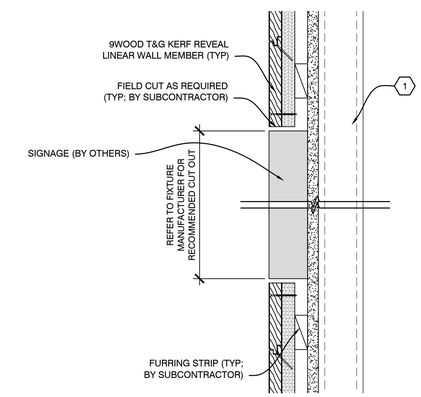

B4 SECTION - WALL PENETRATION
SCALE: 1" = 1"

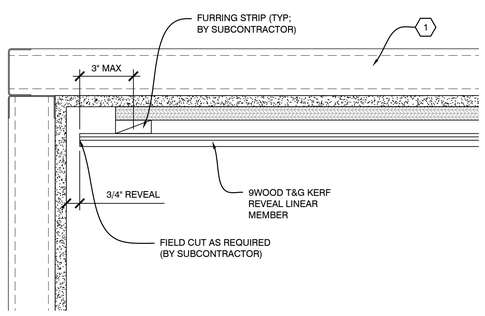

A1 SECTION - PERIMETER
SCALE: 1" = 1"

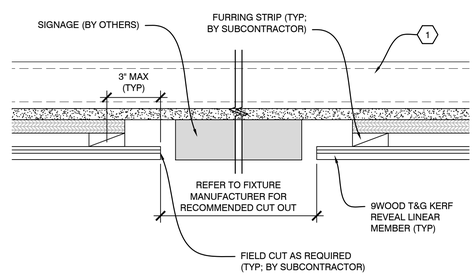

A2 SECTION - WALL PENETRATION
SCALE: 1/4" = 1"

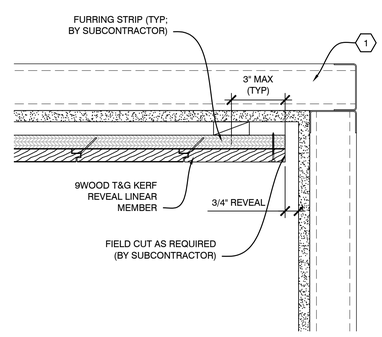

A3 SECTION - PERIMETER
SCALE: 1" = 1"

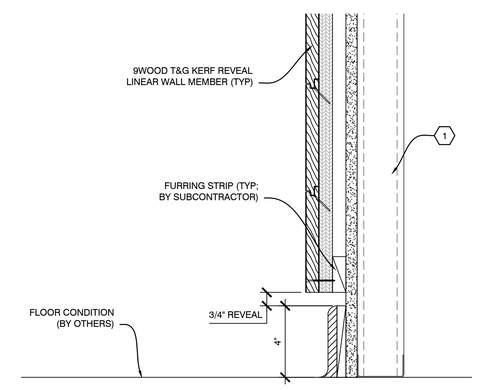

A4 SECTION - FLOOR PERIMETER
SCALE: 1/4" = 1"

9WOOD
CUSTOM MADE FAST

999 SOUTH A STREET
SPRINGFIELD, OR 97477

TOLL-FREE 888.767.9990
FACSIMILE 888.767.9998

WWW.9WOOD.COM
ENGINEERING@9WOOD.COM

PROJECT CERTIFICATIONS: YES ☐ NO ☑

PROJECT

PROJECT NUMBER:
PROPOSAL NUMBER:

REVISION HISTORY

REV#	DATE	DESCRIPTION
10		
9		
8		
7		
6		
5		
4		
3		
2		
1		
0		

SHEET INFORMATION

DRAWING TYPE: SHOP DRAWINGS
DRAWN BY: DMS
STANDARDS REVIEW: RAC
TECHNICAL REVIEW: RAC

THIS DOCUMENT CONTAINS PROPRIETARY INFORMATION OF 9WOOD, INC.
COPYRIGHT © 2025 9WOOD, INC.
ALL RIGHTS RESERVED.

KEY NOTES

1 PERIMETER CONDITION (TYP; BY OTHERS)

SHEET TITLE

SYSTEM DETAILS

Z-501
SHEET 3 OF 3

FILE-NO-FILENAME: S:\9WOOD\9 PRODUCTS (CUSTOMER) VER 1.3 TEMPLATE SHOP DRAWINGS\SHOP DRAWINGS\SHOP RENTAL LAMINA\SHOP DRAWINGS\PROPOSAL\Z-501 - 9X10.DWG
PLOTTED BY: Dmitriy Sivakov 2025-01-08 4:07 PM - PLOT TIME: 0:00:00 - PAPER SIZE: 9.00 X 12.00 - PLOT STYLE: COLOR.CTB - LAYOUT: SYSTEM DETAILS

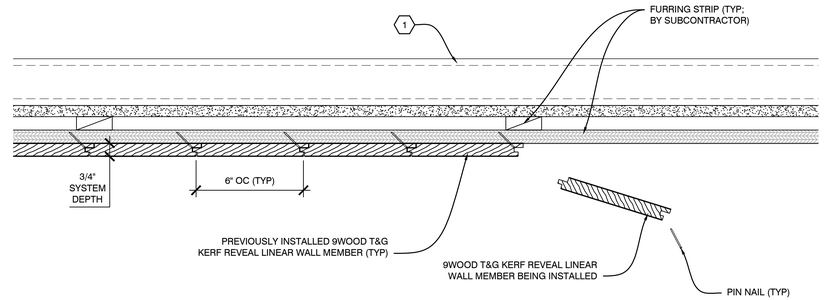

B3 INSTALLATION PROCESS - T&G KERF REVEAL LINEAR MEMBER

SCALE: 1/4" = 1"

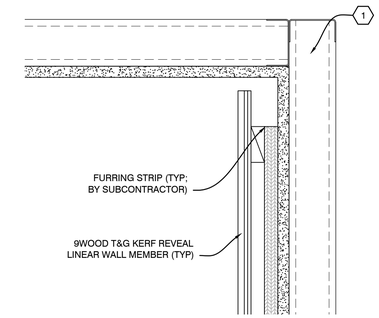

C4 SECTION - CEILING PERIMETER

SCALE: 1/4" = 1"

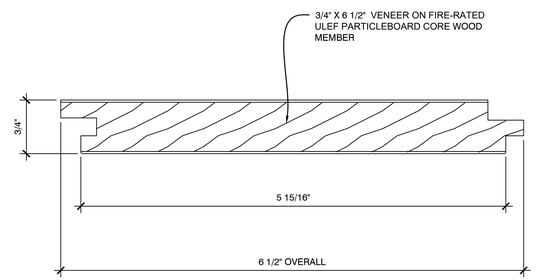

B1 SECTION - T&G KERF REVEAL LINEAR MEMBER

SCALE: 1" = 1"

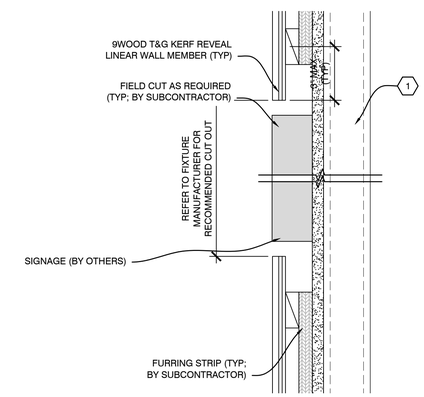

B4 SECTION - WALL PENETRATION

SCALE: 1" = 1"

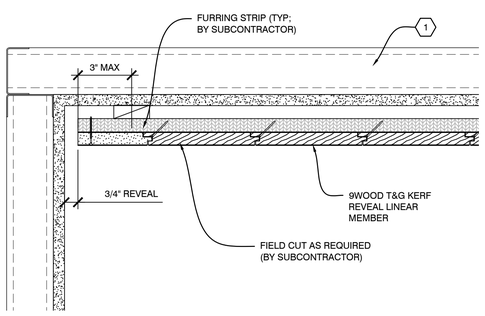

A1 SECTION - PERIMETER

SCALE: 1" = 1"

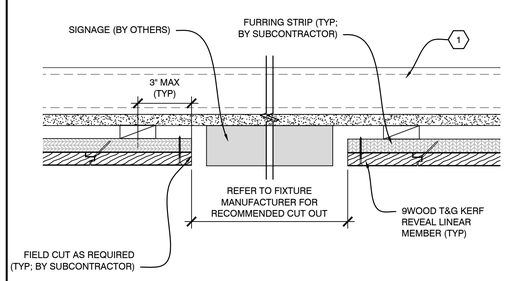

A2 SECTION - WALL PENETRATION

SCALE: 1/4" = 1"

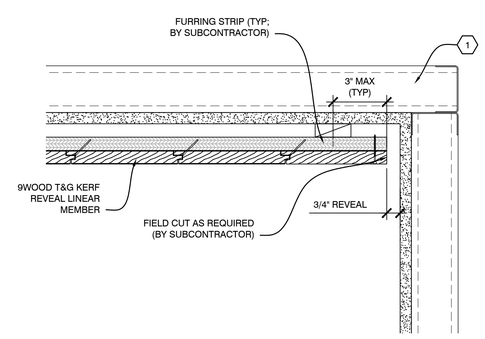

A3 SECTION - PERIMETER

SCALE: 1" = 1"

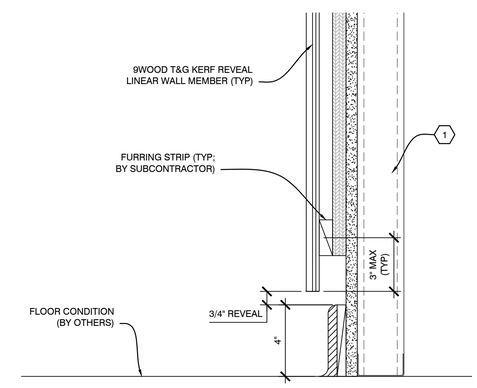

A4 SECTION - FLOOR PERIMETER

SCALE: 1/4" = 1"

9WOOD

CUSTOM MADE FAST

999 SOUTH A STREET
SPRINGFIELD, OR 97477

TOLL-FREE 888.767.9990
FACSIMILE 888.767.9998

WWW.9WOOD.COM
ENGINEERING@9WOOD.COM

PROJECT CERTIFICATIONS: YES ☐ NO ☑

PROJECT

PROJECT NUMBER:
PROPOSAL NUMBER:

REVISION HISTORY

REV#	DATE	DESCRIPTION
10		
9		
8		
7		
6		
5		
4		
3		
2		
1		
0		

SHEET INFORMATION

DRAWING TYPE: SHOP DRAWINGS
DRAWN BY: DMS
STANDARDS REVIEW: RAC
TECHNICAL REVIEW: RAC

THIS DOCUMENT CONTAINS PROPRIETARY INFORMATION OF 9WOOD, INC.
COPYRIGHT © 2025 9WOOD, INC.
ALL RIGHTS RESERVED.

KEY NOTES

1 PERIMETER CONDITION (TYP; BY OTHERS)

SHEET TITLE

SYSTEM DETAILS

Z-501

SHEET 3 OF 3

PATH AND FILENAME: S:\SIGNAGE PRODUCTS\CUSTOMER VIEW\13 TEMPLATE SHOP DRAWINGS\CKR REVEAL LINEAR\1-DWG\SHOP\9WOOD\CKR REVEAL LINEAR - 75 X 5.DWG
USER CONTROL: Windows, Domain, 9WOOD\DMS, 9WOOD\RAC, 9WOOD\RAC, 9WOOD\RAC