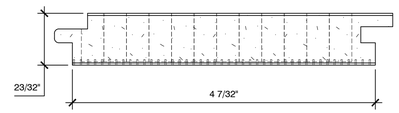

C3 SECTION - NANOPERF PLANK
SCALE: 1" = 1"

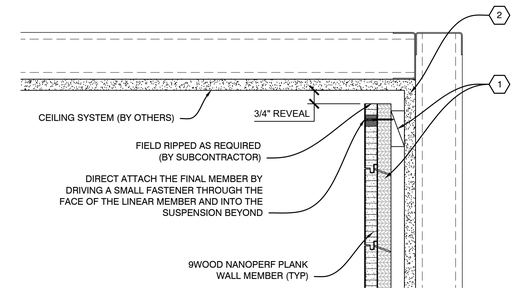

D4 SECTION - CEILING PERIMETER
SCALE: 1/4" = 1"

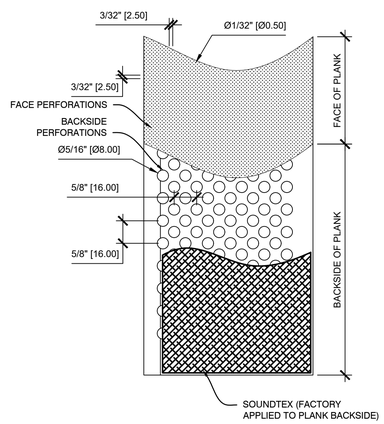

B2 FACE / PLAN VIEW - NANOPERF WALL PLANK
SCALE: 1/2" = 1"

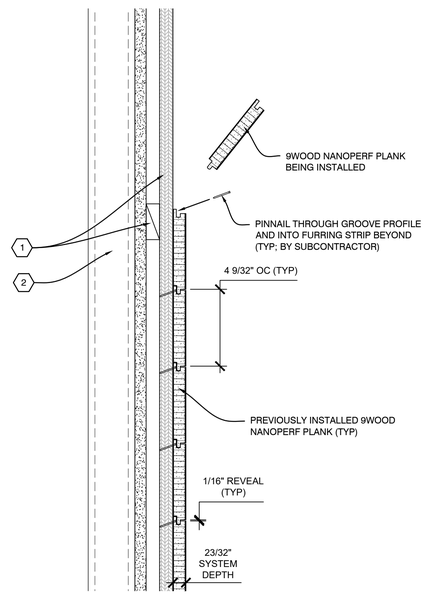

B3 INSTALLATION PROCESS - NANOPERF PLANK WALL SYSTEM
SCALE: 1/4" = 1"

NOTES:
- FIXTURES TO BE INDEPENDENTLY SUPPORTED AND NOT TO BEAR ON 9WOOD WALL SYSTEM.

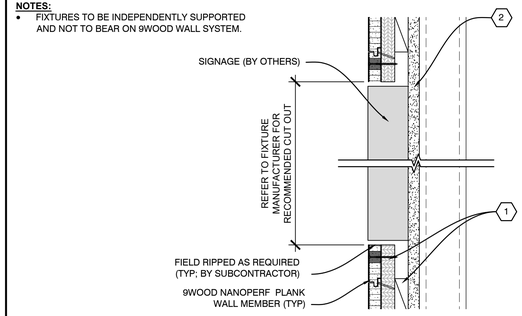

C4 SECTION - WALL PENETRATION
SCALE: 1/4" = 1"

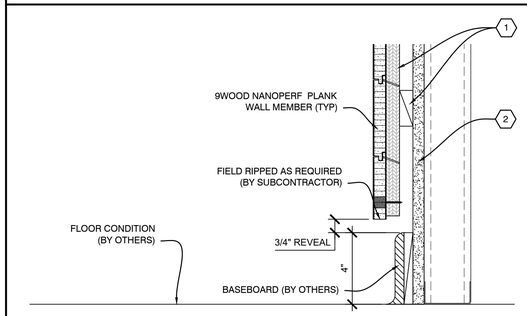

B4 SECTION - FLOOR PERIMETER
SCALE: 1/4" = 1"

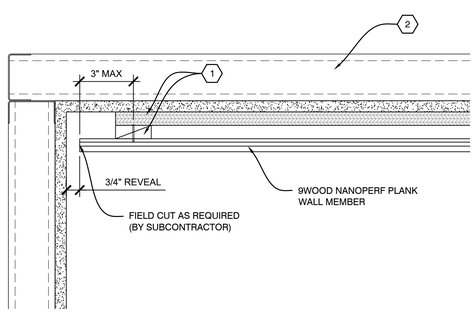

A1 PLAN VIEW - PERIMETER
SCALE: 1/4" = 1"

NOTES:
- FIXTURES TO BE INDEPENDENTLY SUPPORTED AND NOT TO BEAR ON 9WOOD WALL SYSTEM.

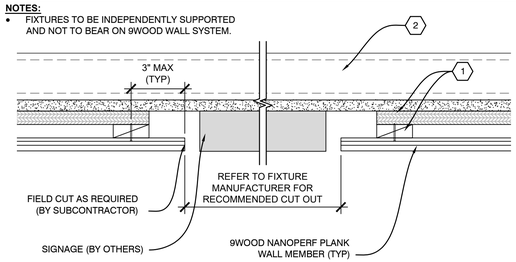

A2 PLAN VIEW - WALL PENETRATION
SCALE: 1/4" = 1"

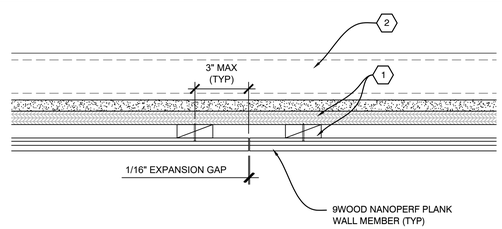

A3 PLAN VIEW - ABUTTING REVEAL
SCALE: 1/4" = 1"

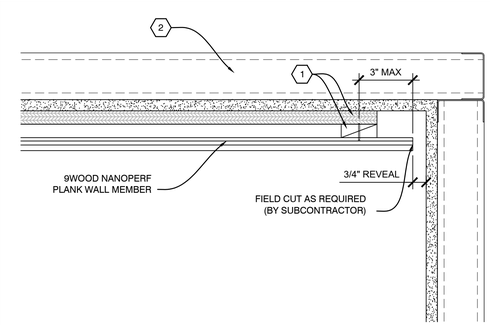

A4 PLAN VIEW - PERIMETER
SCALE: 1/4" = 1"

9WOOD
Custom made fast

999 SOUTH A STREET
SPRINGFIELD, OR 97477

TOLL-FREE 888.767.9990
FACSIMILE 888.767.9998

WWW.9WOOD.COM
ENGINEERING@9WOOD.COM

PROJECT CERTIFICATIONS: YES ☐ NO ☑

PROJECT

PROJECT NUMBER:
PROPOSAL NUMBER:

REVISION HISTORY

REV#	DATE	DESCRIPTION
10		
9		
8		
7		
6		
5		
4		
3		
2		
1		
0	08.27.25	RELEASE FOR APPROVALS

SHEET INFORMATION

DRAWING TYPE: SHOP DRAWINGS
DRAWN BY: RAC
STANDARDS REVIEW: JBH
TECHNICAL REVIEW: JBH

THIS DOCUMENT CONTAINS PROPRIETARY INFORMATION OF 9WOOD, INC.
COPYRIGHT © 2024 9WOOD, INC.
ALL RIGHTS RESERVED.

KEY NOTES

1. FURRING STRIP (TYP; BY SUBCONTRACTOR)
2. WALL CONDITION (TYP; BY OTHERS)

SHEET TITLE

SYSTEM DETAILS

Z-501
SHEET 3 OF 3

PATH AND FILENAME: S:\BRAND\9-PRODUCTS\CUSTOMER\1-TEMPLATE SHOP DRAWINGS\TEMPLATES\SHOP DRAWINGS\TEMPLATE-SD-2-TYP-3-4.DWG
LAST EDITED: Monday, August 11, 2025 10:06 AM EDT BY: RACHEL ALLEN (RACHEL.ALLEN@9WOOD.COM) SCALE: 1:1 LETTER - HORIZONTAL.DWG