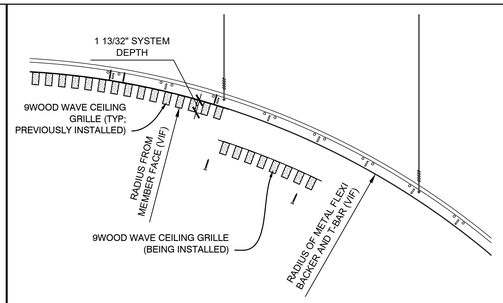

D2 INSTALLATION PROCESS - WAVE GRILLES

SCALE: 1 1/2" = 1'

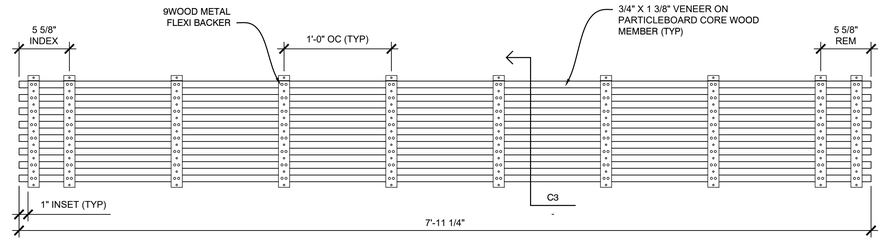

D3 PLAN VIEW - WAVE GRILLE "1.8"

SCALE: 1 1/2" = 1'

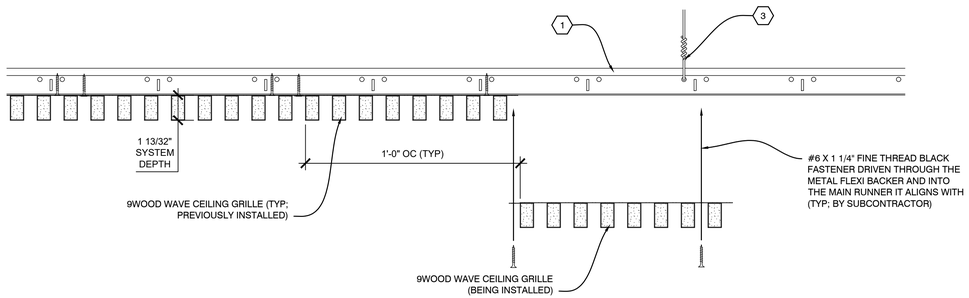

C1 INSTALLATION PROCESS - WAVE GRILLE

SCALE: 1/4" = 1"

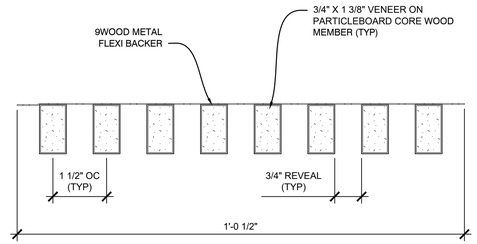

C3 SECTION - WAVE GRILLE

SCALE: 1/2" = 1"

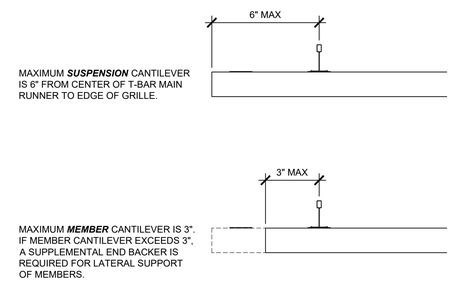

C4 SECTION - CANTILEVER RULES

SCALE: 1/4" = 1"

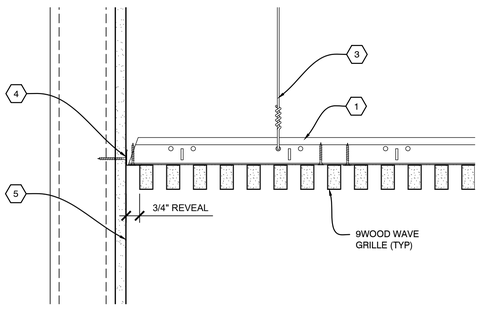

B1 SECTION - PERIMETER

SCALE: 1/4" = 1"

NOTES:
- DETAIL TO BE USED WHERE APPLICABLE.
- FIXTURES TO BE INDEPENDENTLY SUPPORTED AND NOT TO BEAR ON 9WOOD CEILING SYSTEM.

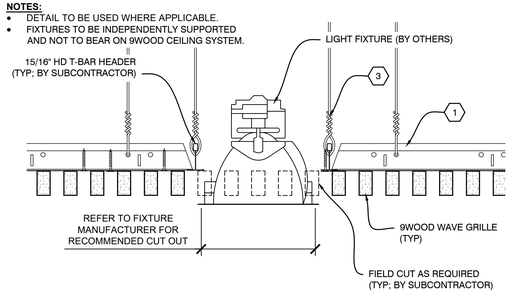

B2 SECTION - LIGHT FIXTURE

SCALE: 1/4" = 1"

NOTES:
- DETAIL TO BE USED WHERE APPLICABLE.
- FIXTURES TO BE INDEPENDENTLY SUPPORTED AND NOT TO BEAR ON 9WOOD CEILING SYSTEM.

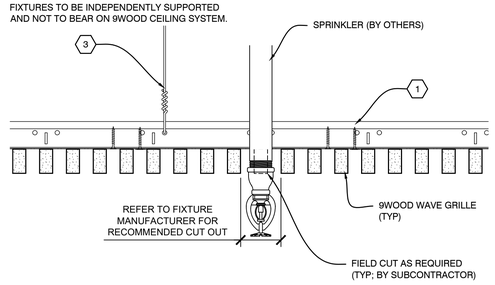

B3 SECTION - SPRINKLER

SCALE: 1/4" = 1"

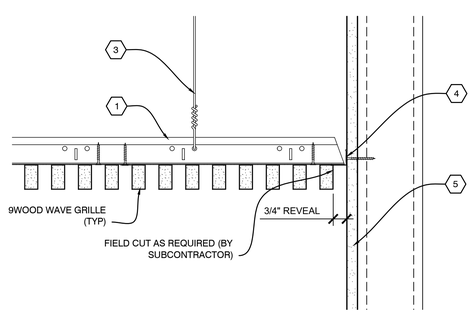

B4 SECTION - PERIMETER

SCALE: 1/4" = 1"

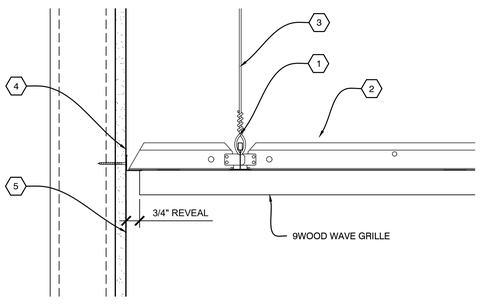

A1 SECTION - PERIMETER

SCALE: 1/4" = 1"

NOTES:
- DETAIL TO BE USED WHERE APPLICABLE.
- FIXTURES TO BE INDEPENDENTLY SUPPORTED AND NOT TO BEAR ON 9WOOD CEILING SYSTEM.

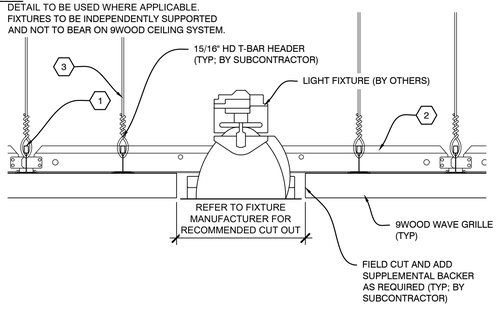

A2 SECTION - LIGHT FIXTURE

SCALE: 1/4" = 1"

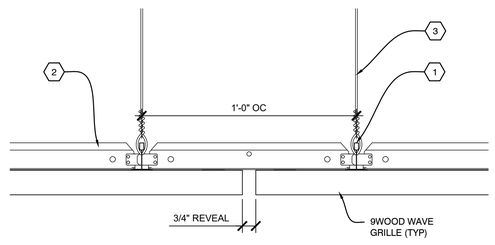

A3 SECTION - ABUTTING REVEAL

SCALE: 1/4" = 1"

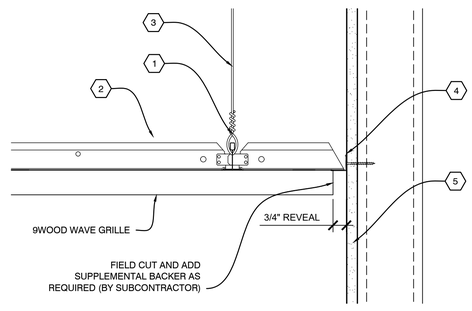

A4 SECTION - PERIMETER

SCALE: 1/4" = 1"

9WOOD
Custom made fast

999 SOUTH A STREET
SPRINGFIELD, OR 97477

TOLL-FREE 888.767.9990
FACSIMILE 888.767.9998

WWW.9WOOD.COM
ENGINEERING@9WOOD.COM

PROJECT CERTIFICATIONS: YES ☐ NO ☑

PROJECT

PROJECT NUMBER:
PROPOSAL NUMBER:

REVISION HISTORY

REV#	DATE	DESCRIPTION
10		
9		
8		
7		
6		
5		
4		
3		
2		
1		
0	02.18.25	RELEASE FOR APPROVALS

SHEET INFORMATION

DRAWING TYPE: SHOP DRAWINGS
DRAWN BY: JBH
STANDARDS REVIEW: RAC
TECHNICAL REVIEW: RAC

THIS DOCUMENT CONTAINS PROPRIETARY INFORMATION OF 9WOOD, INC.
COPYRIGHT © 2025 9WOOD, INC.
ALL RIGHTS RESERVED.

KEY NOTES

1. 15/16" HEAVY DUTY T-BAR MAIN RUNNER (TYP; BY SUBCONTRACTOR)
2. 15/16" T-BAR CROSS TEE (TYP; BY SUBCONTRACTOR)
3. HANGER WIRE (TYP; BY SUBCONTRACTOR)
4. WALL ANGLE AND APPROPRIATE INSTALLATION FASTENER (TYP; BY SUBCONTRACTOR)
5. PERIMETER CONDITION (TYP; BY OTHERS)

SHEET TITLE

SYSTEM DETAILS

Z-501

PATH AND FILENAME: 9WOOD LOCAL FILES\WWW\9WOOD TRAYS-FITS\01 BUILD\CUSTOM FAB\09_8-1-1 D-8 WAVE GRILLE 2\9WOSD 8-1-1 D-8 2 X 2 LYN 9WOOD WAVE GRILLE V1\9WOSD 8-1-1 D-8 2 X 2 LYN 9WOOD WAVE GRILLE V1.DWG
PLOT STYLES: Screen, Monochrome.ctb; PAGE SETUP: 1 ANSI E LAYOUT; PLOTTED BY: John Wilhelm; LAST PLOT STAMP: 2025-02-18 11:07:09 EST; JOB#: 25-0168