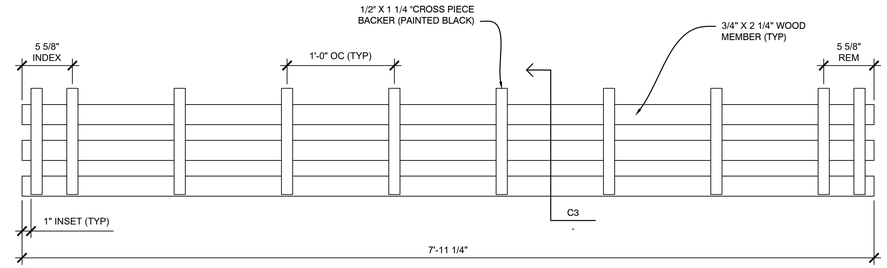


## D3 PLAN VIEW - LINEAR CEILING PANEL

SCALE: 1 1/2" = 1'

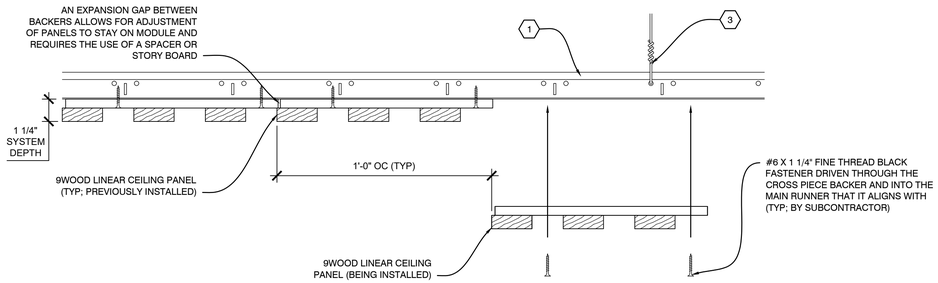


## C1 INSTALLATION PROCESS - LINEAR CEILING PANEL

SCALE: 1/4" = 1"

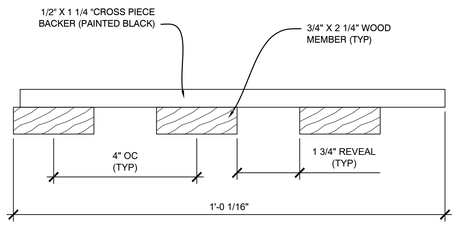


## C3 SECTION - LINEAR CEILING PANEL

SCALE: 1/2" = 1"

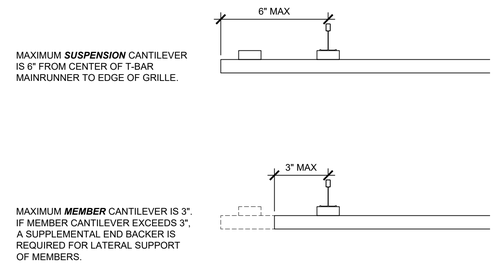


## C4 SECTION - CANTILEVER RULES

SCALE: 1/4" = 1"

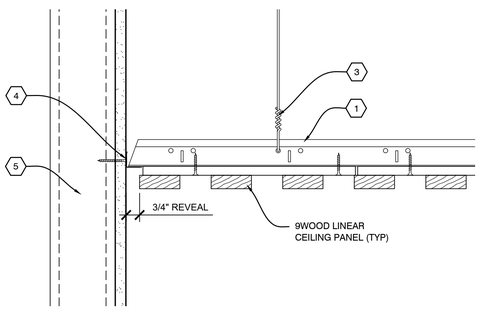


## B1 SECTION - PERIMETER

SCALE: 1/4" = 1"

**NOTES:**
- FIXTURES TO BE INDEPENDENTLY SUPPORTED AND NOT TO BEAR ON 9WOOD CEILING SYSTEM.

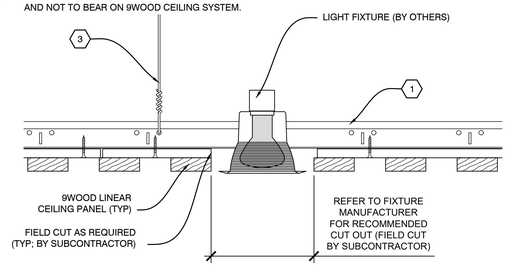


## B2 SECTION - LIGHT FIXTURE

SCALE: 1/4" = 1"

**NOTES:**
- FIXTURES TO BE INDEPENDENTLY SUPPORTED AND NOT TO BEAR ON 9WOOD CEILING SYSTEM.

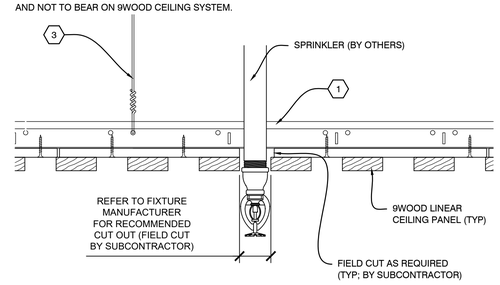


## B3 SECTION - SPRINKLER

SCALE: 1/4" = 1"

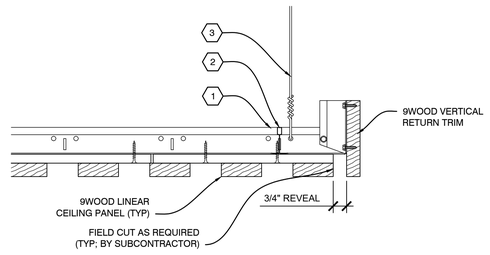


## B4 SECTION - PERIMETER

SCALE: 1/4" = 1"

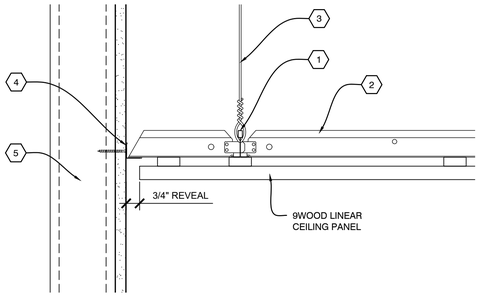


## A1 SECTION - PERIMETER

SCALE: 1/4" = 1"

**NOTES:**
- FIXTURES TO BE INDEPENDENTLY SUPPORTED AND NOT TO BEAR ON 9WOOD CEILING SYSTEM.

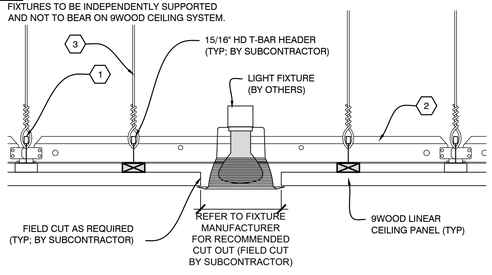


## A2 SECTION - LIGHT FIXTURE

SCALE: 1/4" = 1"

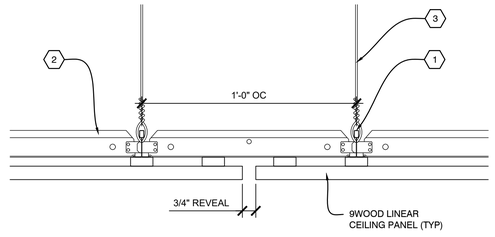


## A3 SECTION - ABUTTING REVEAL

SCALE: 1/4" = 1"

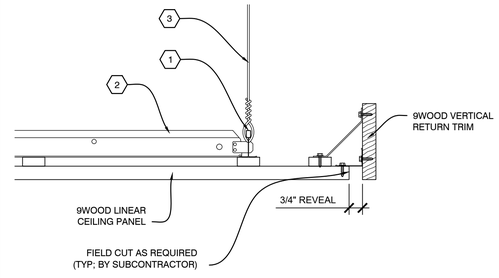


## A4 SECTION - PERIMETER

SCALE: 1/4" = 1"


9 WOOD
Custom made fast

999 SOUTH A STREET
SPRINGFIELD, OR 97477

TOLL-FREE 888.767.9990
FACSIMILE 888.767.9998

WWW.9WOOD.COM
ENGINEERING@9WOOD.COM


FSC CERTIFIED PROJECT: YES ☐ NO ☑

PROJECT

PROJECT NUMBER:
PROPOSAL NUMBER:

REVISION HISTORY

| REV# | DATE | DESCRIPTION |
|---|---|---|
| 10 | | |
| 9 | | |
| 8 | | |
| 7 | | |
| 6 | | |
| 5 | | |
| 4 | | |
| 3 | | |
| 2 | | |
| 1 | | |
| 0 | 08.28.25 | RELEASE FOR APPROVAL'S |

SHEET INFORMATION

DRAWING TYPE: SHOP DRAWINGS
DRAWN BY: BLH
STANDARDS REVIEW: RAC
TECHNICAL REVIEW: RAC


THIS DOCUMENT CONTAINS PROPRIETARY INFORMATION OF 9WOOD, INC.
COPYRIGHT © 2025 9WOOD, INC.
ALL RIGHTS RESERVED.


KEY NOTES

1. 15/16" HEAVY DUTY T-BAR MAIN RUNNER (TYP; BY SUBCONTRACTOR)
2. 15/16" T-BAR CROSS TEE (TYP; BY SUBCONTRACTOR)
3. HANGER WIRE (TYP; BY SUBCONTRACTOR)
4. WALL ANGLE AND APPROPRIATE INSTALLATION FASTENER (TYP; BY SUBCONTRACTOR)
5. PERIMETER CONDITION (TYP; BY OTHERS)

SHEET TITLE

# SYSTEM DETAILS

Z-501




PATH AND FILENAME: J:\BRAVO# PRODUCTS\CUSTOMER\VERO LTTRDA LITE SHOP DRAWINGS\10 PANELS\D3 LINEAR\AUTOCAD\DRAWINGS\DWG FOLDER\D3 - 75 X 2.25.DWG
PLOTTED BY: Brian Hall Tuesday, August 26, 2025 12:17 PM CUT SHEET SIZE: ANSI C (18.00 X 24.00 INCHES) PLOT SCALE: 1.1:1 LAYOUT: LAYOUT1 DWG: 1:1

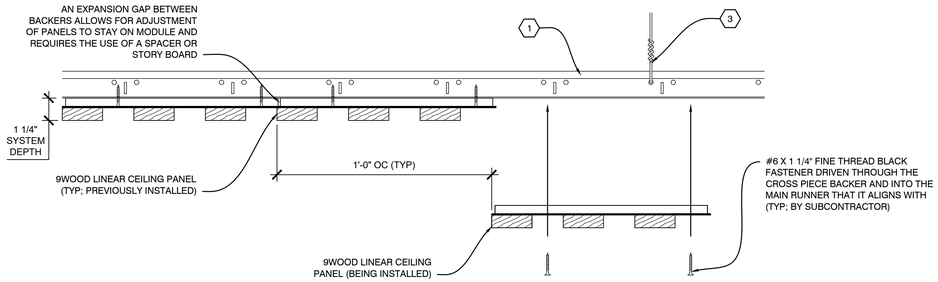


C1 INSTALLATION PROCESS - LINEAR CEILING PANEL
SCALE: 1/4" = 1"

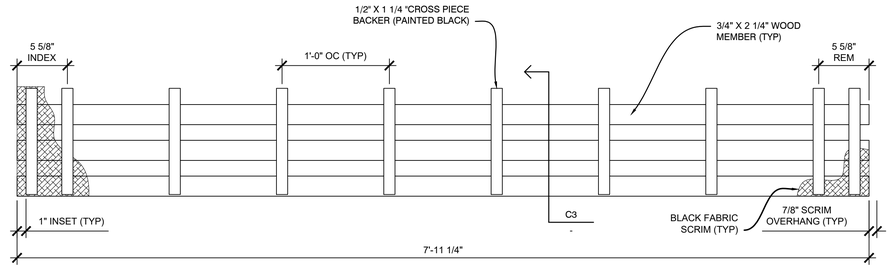


D3 PLAN VIEW - LINEAR CEILING PANEL
SCALE: 1 1/2" = 1'

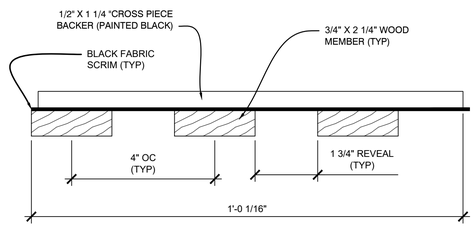


C3 SECTION - LINEAR CEILING PANEL
SCALE: 1/2" = 1"

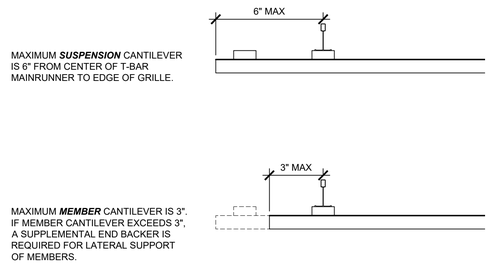


C4 SECTION - CANTILEVER RULES
SCALE: 1/4" = 1"

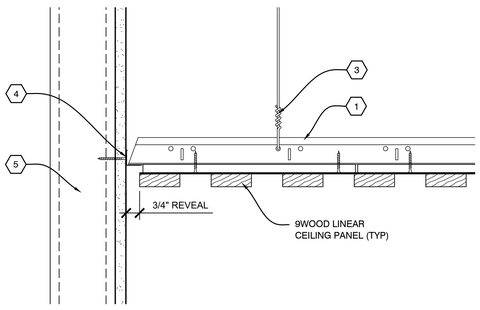


B1 SECTION - PERIMETER
SCALE: 1/4" = 1"

**NOTES:**
- FIXTURES TO BE INDEPENDENTLY SUPPORTED AND NOT TO BEAR ON 9WOOD CEILING SYSTEM.

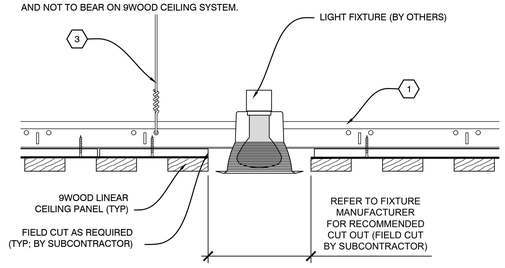


B2 SECTION - LIGHT FIXTURE
SCALE: 1/4" = 1"

**NOTES:**
- FIXTURES TO BE INDEPENDENTLY SUPPORTED AND NOT TO BEAR ON 9WOOD CEILING SYSTEM.

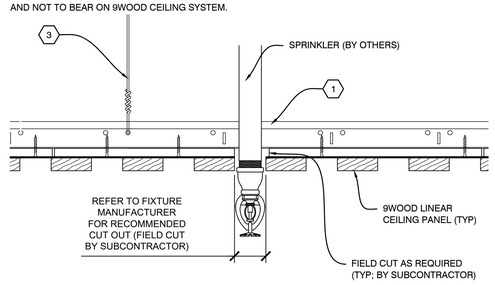


B3 SECTION - SPRINKLER
SCALE: 1/4" = 1"

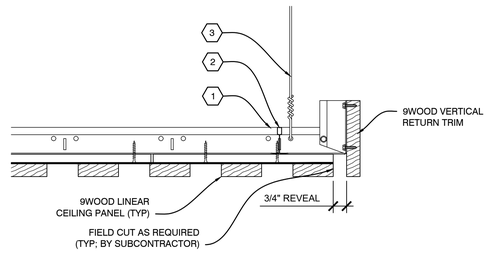


B4 SECTION - PERIMETER
SCALE: 1/4" = 1"

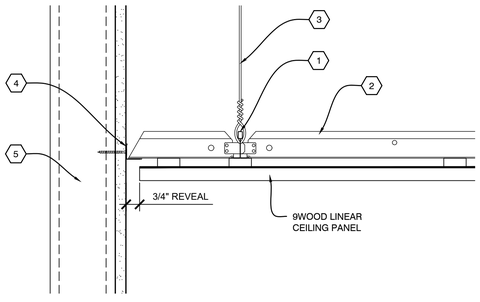


A1 SECTION - PERIMETER
SCALE: 1/4" = 1"

**NOTES:**
- FIXTURES TO BE INDEPENDENTLY SUPPORTED AND NOT TO BEAR ON 9WOOD CEILING SYSTEM.

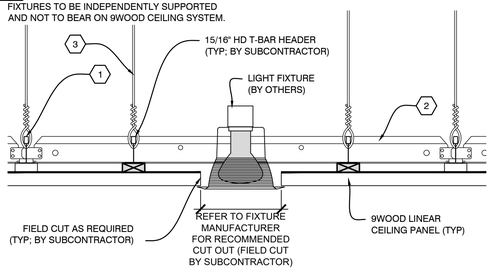


A2 SECTION - LIGHT FIXTURE
SCALE: 1/4" = 1"

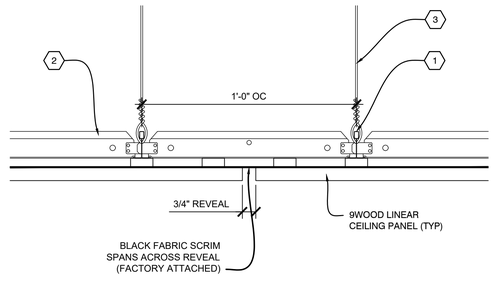


A3 SECTION - ABUTTING REVEAL
SCALE: 1/4" = 1"

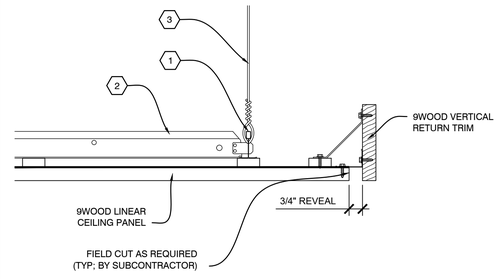


A4 SECTION - PERIMETER
SCALE: 1/4" = 1"


9 WOOD
Custom made fast

999 SOUTH A STREET
SPRINGFIELD, OR 97477

TOLL-FREE 888.767.9990
FACSIMILE 888.767.9998

WWW.9WOOD.COM
ENGINEERING@9WOOD.COM


FSC CERTIFIED PROJECT: YES ☐ NO ☑

PROJECT

PROJECT NUMBER:
PROPOSAL NUMBER:

REVISION HISTORY

| REV# | DATE | DESCRIPTION |
|---|---|---|
| 10 | | |
| 9 | | |
| 8 | | |
| 7 | | |
| 6 | | |
| 5 | | |
| 4 | | |
| 3 | | |
| 2 | | |
| 1 | | |
| 0 | 08.28.25 | RELEASE FOR APPROVAL'S |

SHEET INFORMATION

DRAWING TYPE: SHOP DRAWINGS
DRAWN BY: BLH
STANDARDS REVIEW: RAC
TECHNICAL REVIEW: RAC


THIS DOCUMENT CONTAINS PROPRIETARY INFORMATION OF 9WOOD, INC.
COPYRIGHT © 2025 9WOOD, INC.
ALL RIGHTS RESERVED.


KEY NOTES

1. 15/16" HEAVY DUTY T-BAR MAIN RUNNER (TYP; BY SUBCONTRACTOR)
2. 15/16" T-BAR CROSS TEE (TYP; BY SUBCONTRACTOR)
3. HANGER WIRE (TYP; BY SUBCONTRACTOR)
4. WALL ANGLE AND APPROPRIATE INSTALLATION FASTENER (TYP; BY SUBCONTRACTOR)
5. PERIMETER CONDITION (TYP; BY OTHERS)

SHEET TITLE

# SYSTEM DETAILS

Z-501
SHEET 3 OF 3


PATH AND FILENAME: J:\BRAVO# PROJECTS\CUSTOMER\VERO LTTRDA LITE SHOP DRAWINGS\D1 PANELS\D3 LINEAR\AUTOCAD\DRAWINGS\DWG FILE\BRV313 - 75 X 2.25.DWG
PLOTTED BY: Brian Hall, August 28, 2025 - 2:07 PM, PLOT SCALE: 1.00000000000000000000, PLOT STYLE: 9WOOD.CTB, LAYOUT: C3-SECTION - LINEAR CEILING PANEL