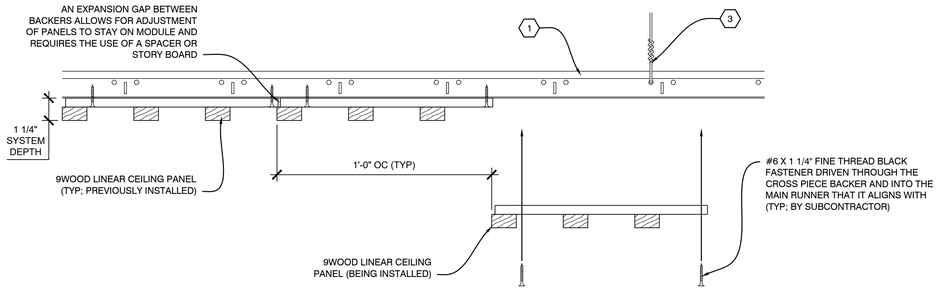

C1 INSTALLATION PROCESS - LINEAR CEILING PANEL
SCALE: 1/4" = 1"

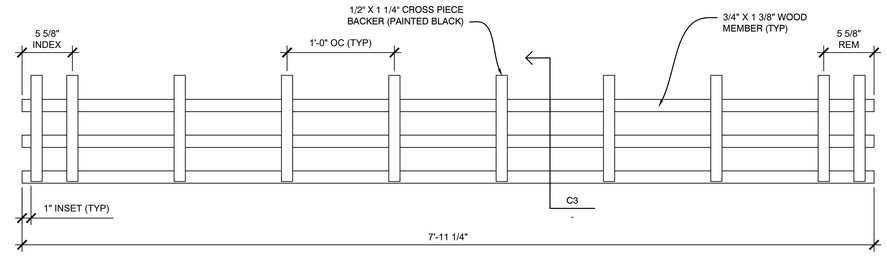

D3 PLAN VIEW - LINEAR CEILING PANEL
SCALE: 1 1/2" = 1'

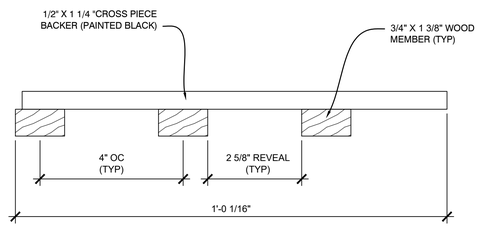

C3 SECTION - LINEAR CEILING PANEL
SCALE: 1/2" = 1"

MAXIMUM ***SUSPENSION*** CANTILEVER IS 6" FROM CENTER OF T-BAR MAINRUNNER TO EDGE OF GRILLE.

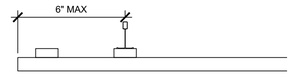

MAXIMUM ***MEMBER*** CANTILEVER IS 3". IF MEMBER CANTILEVER EXCEEDS 3", A SUPPLEMENTAL END BACKER IS REQUIRED FOR LATERAL SUPPORT OF MEMBERS.

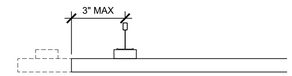

C4 SECTION - CANTILEVER RULES
SCALE: 1/4" = 1"

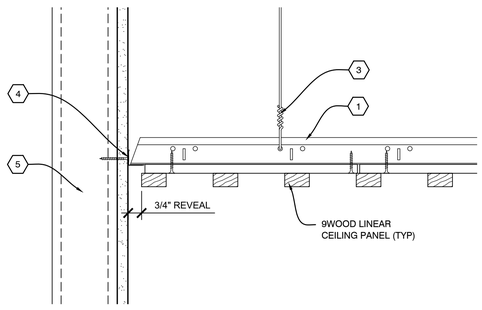

B1 SECTION - PERIMETER
SCALE: 1/4" = 1"

NOTES:
- FIXTURES TO BE INDEPENDENTLY SUPPORTED AND NOT TO BEAR ON 9WOOD CEILING SYSTEM.

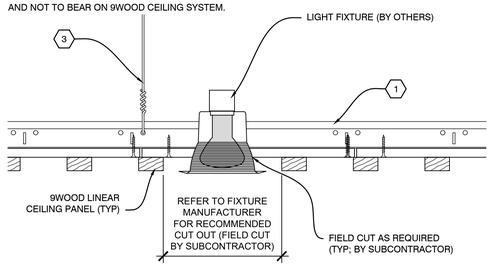

B2 SECTION - LIGHT FIXTURE
SCALE: 1/4" = 1"

NOTES:
- FIXTURES TO BE INDEPENDENTLY SUPPORTED AND NOT TO BEAR ON 9WOOD CEILING SYSTEM.

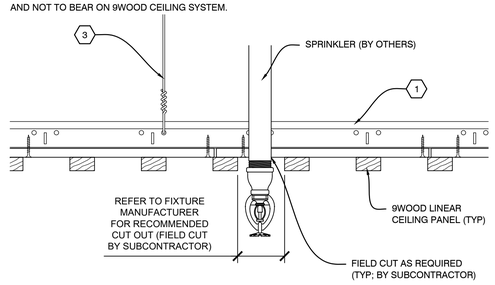

B3 SECTION - SPRINKLER
SCALE: 1/4" = 1"

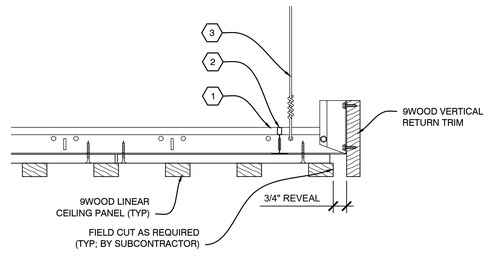

B4 SECTION - PERIMETER
SCALE: 1/4" = 1"

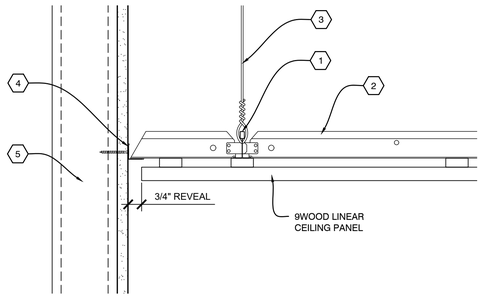

A1 SECTION - PERIMETER
SCALE: 1/4" = 1"

NOTES:
- FIXTURES TO BE INDEPENDENTLY SUPPORTED AND NOT TO BEAR ON 9WOOD CEILING SYSTEM.

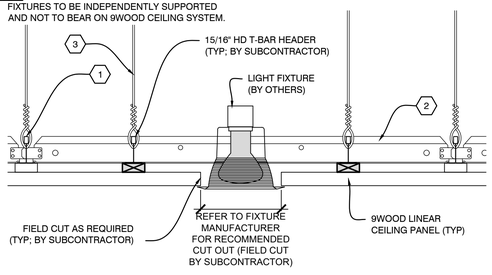

A2 SECTION - LIGHT FIXTURE
SCALE: 1/4" = 1"

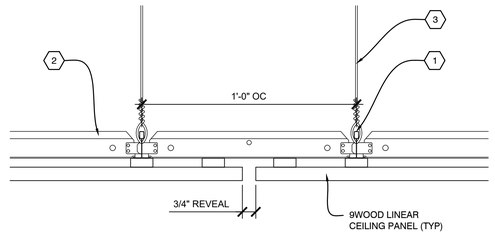

A3 SECTION - ABUTTING REVEAL
SCALE: 1/4" = 1"

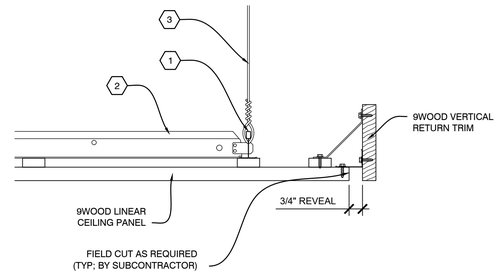

A4 SECTION - PERIMETER
SCALE: 1/4" = 1"

9WOOD
Custom made fast

999 SOUTH A STREET
SPRINGFIELD, OR 97477

TOLL-FREE 888.767.9990
FACSIMILE 888.767.9998

WWW.9WOOD.COM
ENGINEERING@9WOOD.COM

FSC CERTIFIED PROJECT: YES ☐ NO ☑

PROJECT

PROJECT NUMBER:
PROPOSAL NUMBER:

REVISION HISTORY

REV#	DATE	DESCRIPTION
10		
9		
8		
7		
6		
5		
4		
3		
2		
1		
0	08.28.25	RELEASE FOR APPROVAL'S

SHEET INFORMATION

DRAWING TYPE: SHOP DRAWINGS
DRAWN BY: BLH
STANDARDS REVIEW: RAC
TECHNICAL REVIEW: RAC

THIS DOCUMENT CONTAINS PROPRIETARY INFORMATION OF 9WOOD, INC.
COPYRIGHT © 2025 9WOOD, INC.
ALL RIGHTS RESERVED.

KEY NOTES

1. 15/16" HEAVY DUTY T-BAR MAIN RUNNER (TYP; BY SUBCONTRACTOR)
2. 15/16" T-BAR CROSS TEE (TYP; BY SUBCONTRACTOR)
3. HANGER WIRE (TYP; BY SUBCONTRACTOR)
4. WALL ANGLE AND APPROPRIATE INSTALLATION FASTENER (TYP; BY SUBCONTRACTOR)
5. PERIMETER CONDITION (TYP; BY OTHERS)

SHEET TITLE

SYSTEM DETAILS

Z-501
SHEET 3 OF 3

PATH AND FILENAME: J:\9WOOD\9 PRODUCTS\CUSTOMER\VERO LITTERALE\B SHOP DRAWINGS\100 PANELS\03 LINEAR\AUTOCAD\DRAWINGS\NO FOLDER\D3-3 - 75 X 1.375.DWG
PLOTTED BY: Brian Hall, August 28, 2025 - 9:41 AM | LAST SAVED BY: BRIAN HALL, AUGUST 28, 2025 - 9:41 AM | XREFS: | PAGE SETUP: 1 | STYLESHEET: 9WOOD.CTB

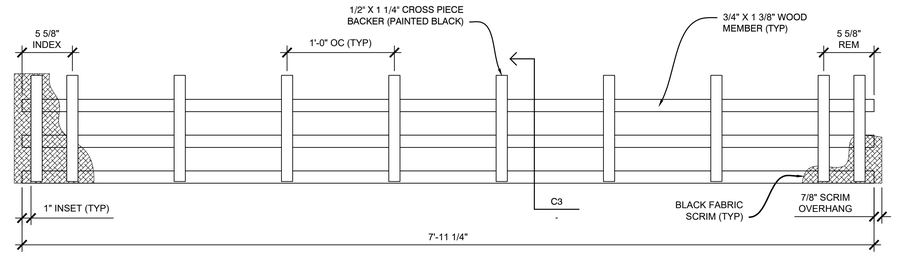

D3 PLAN VIEW - LINEAR CEILING PANEL

SCALE: 1 1/2" = 1'

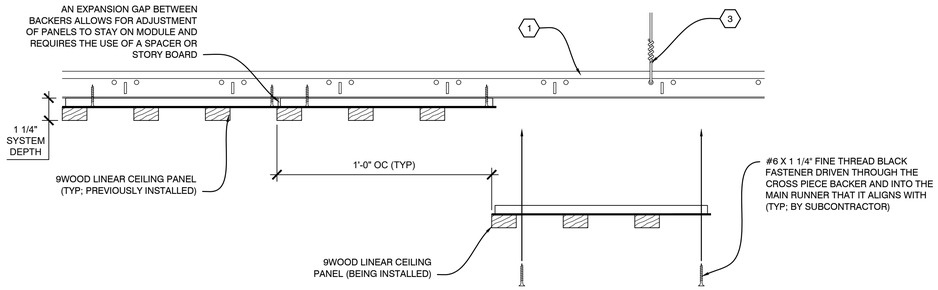

C1 INSTALLATION PROCESS - LINEAR CEILING PANEL

SCALE: 1/4" = 1"

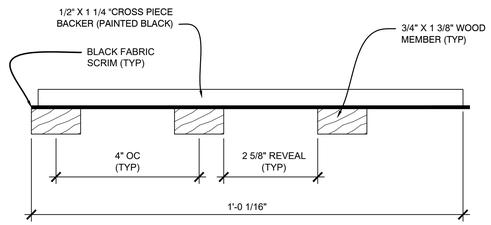

C3 SECTION - LINEAR CEILING PANEL

SCALE: 1/2" = 1"

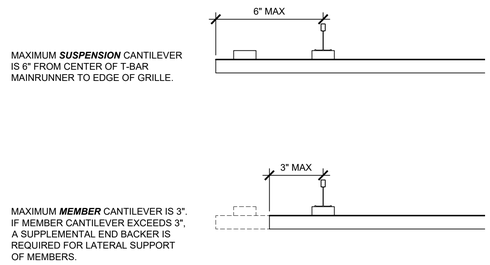

C4 SECTION - CANTILEVER RULES

SCALE: 1/4" = 1"

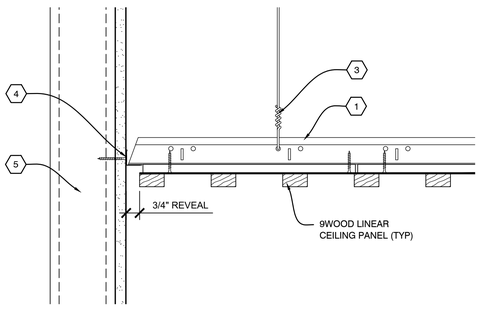

B1 SECTION - PERIMETER

SCALE: 1/4" = 1"

NOTES:
- FIXTURES TO BE INDEPENDENTLY SUPPORTED AND NOT TO BEAR ON 9WOOD CEILING SYSTEM.

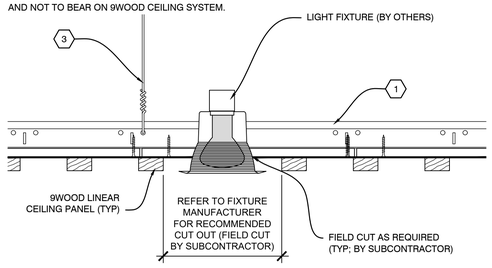

B2 SECTION - LIGHT FIXTURE

SCALE: 1/4" = 1"

NOTES:
- FIXTURES TO BE INDEPENDENTLY SUPPORTED AND NOT TO BEAR ON 9WOOD CEILING SYSTEM.

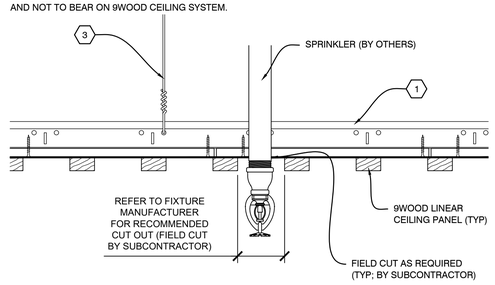

B3 SECTION - SPRINKLER

SCALE: 1/4" = 1"

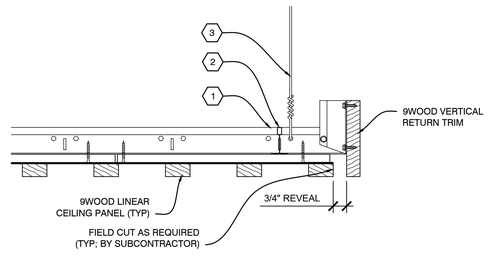

B4 SECTION - PERIMETER

SCALE: 1/4" = 1"

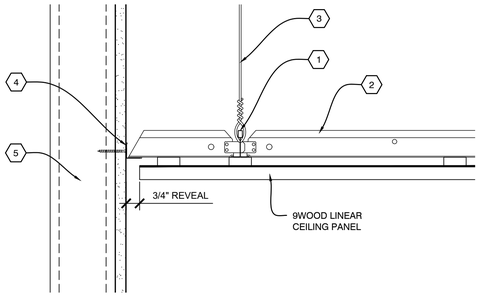

A1 SECTION - PERIMETER

SCALE: 1/4" = 1"

NOTES:
- FIXTURES TO BE INDEPENDENTLY SUPPORTED AND NOT TO BEAR ON 9WOOD CEILING SYSTEM.

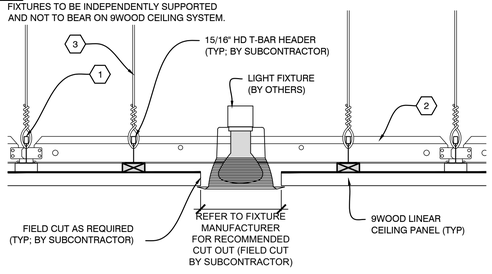

A2 SECTION - LIGHT FIXTURE

SCALE: 1/4" = 1"

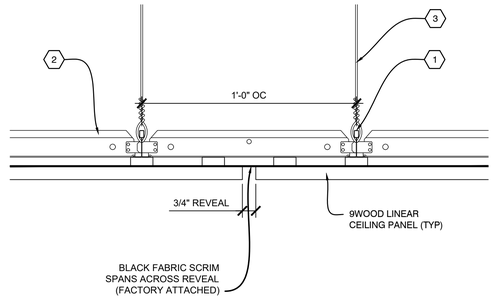

A3 SECTION - ABUTTING REVEAL

SCALE: 1/4" = 1"

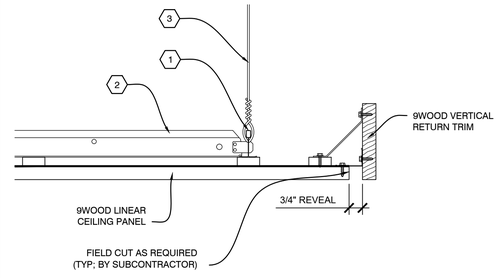

A4 SECTION - PERIMETER

SCALE: 1/4" = 1"

9 WOOD
Custom made fast

999 SOUTH A STREET
SPRINGFIELD, OR 97477

TOLL-FREE 888.767.9990
FACSIMILE 888.767.9998

WWW.9WOOD.COM
ENGINEERING@9WOOD.COM

FSC CERTIFIED PROJECT: YES ☐ NO ☑

PROJECT

PROJECT NUMBER:
PROPOSAL NUMBER:

REVISION HISTORY

REV#	DATE	DESCRIPTION
10		
9		
8		
7		
6		
5		
4		
3		
2		
1		
0	08.28.25	RELEASE FOR APPROVAL'S

SHEET INFORMATION

DRAWING TYPE: SHOP DRAWINGS
DRAWN BY: BLH
STANDARDS REVIEW: RAC
TECHNICAL REVIEW: RAC

THIS DOCUMENT CONTAINS PROPRIETARY INFORMATION OF 9WOOD, INC.
COPYRIGHT © 2025 9WOOD, INC.
ALL RIGHTS RESERVED.

KEY NOTES

1. 15/16" HEAVY DUTY T-BAR MAIN RUNNER (TYP; BY SUBCONTRACTOR)
2. 15/16" T-BAR CROSS TEE (TYP; BY SUBCONTRACTOR)
3. HANGER WIRE (TYP; BY SUBCONTRACTOR)
4. WALL ANGLE AND APPROPRIATE INSTALLATION FASTENER (TYP; BY SUBCONTRACTOR)
5. PERIMETER CONDITION (TYP; BY OTHERS)

SHEET TITLE

SYSTEM DETAILS

Z-501

PATH AND FILENAME: J:\BRAVIA\9 PRODUCTS\CUSTOMER\VERO LITEBAR LIVE SHOP DRAWINGS\10 PANELS\20 LABORA\AUTOCAD\DRAWINGS\NO FOLDER\13-75 X 1.375 DWG
PLOT STYLE TABLE: Default.ctb LAYOUT: C1 DATE: 2025-08-14 TIME: 11:07:07 AM PLOTTED BY: BRIAN HOFFMAN