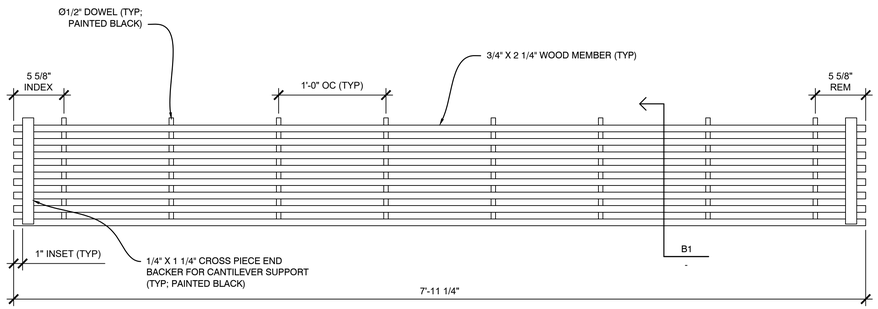

C1 PLAN VIEW - DOWEL CEILING GRILLE

SCALE: 1 1/2" = 1'

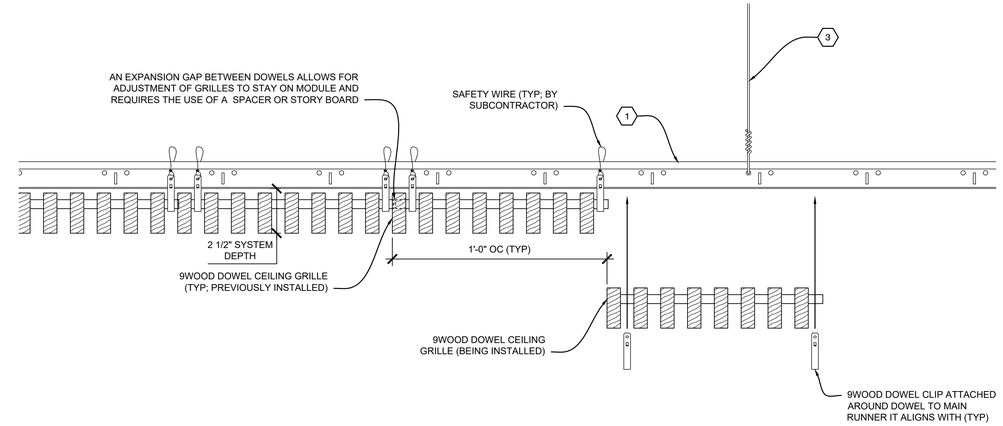

C3 INSTALLATION PROCESS - DOWEL CEILING GRILLE

SCALE: 1/4" = 1"

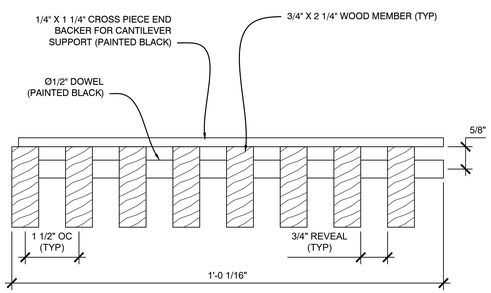

B1 SECTION - DOWEL CEILING GRILLE

SCALE: 1/2" = 1"

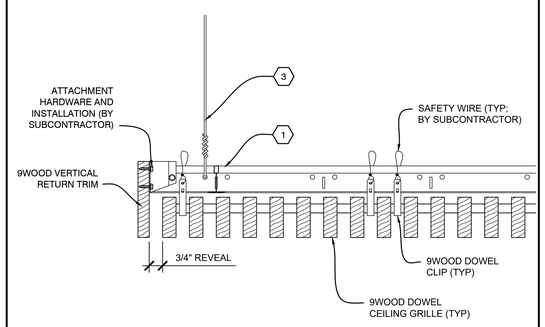

B2 SECTION - PERIMETER

SCALE: 1/4" = 1"

NOTES:

- FIXTURES TO BE INDEPENDENTLY SUPPORTED AND NOT TO BEAR ON 9WOOD CEILING SYSTEM.

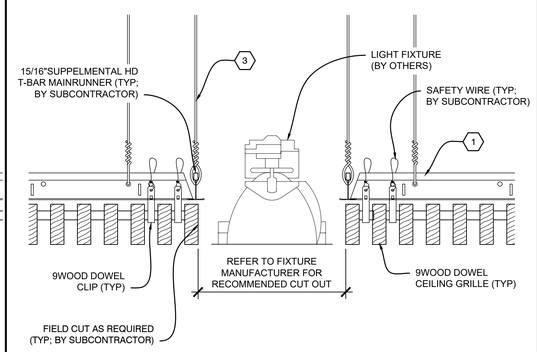

B3 SECTION - LIGHT FIXTURE

SCALE: 1/4" = 1"

NOTES:

- FIXTURES TO BE INDEPENDENTLY SUPPORTED AND NOT TO BEAR ON 9WOOD CEILING SYSTEM.

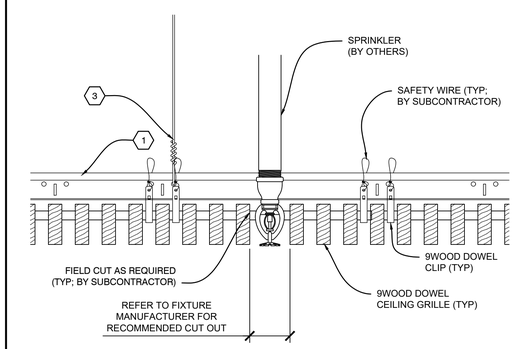

B4 SECTION - SPRINKLER

SCALE: 1/4" = 1"

MAXIMUM ***SUSPENSION*** CANTILEVER IS 6" FROM CENTER OF T-BAR MAINRUNNER TO EDGE OF GRILLE.

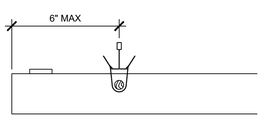

MAXIMUM ***MEMBER*** CANTILEVER IS 3". IF MEMBER CANTILEVER EXCEEDS 3", A SUPPLEMENTAL END BACKER IS REQUIRED FOR LATERAL SUPPORT OF MEMBERS.

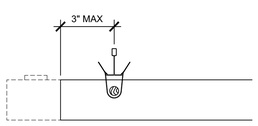

A1 SECTION - CANTILEVER

SCALE: 1/4" = 1"

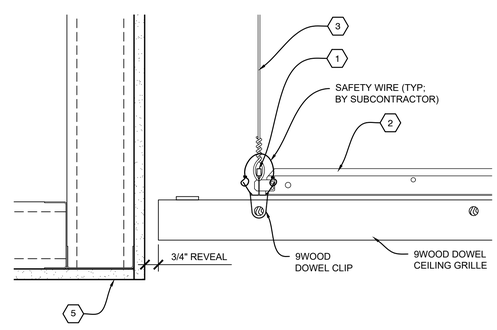

A2 SECTION - PERIMETER

SCALE: 1/4" = 1"

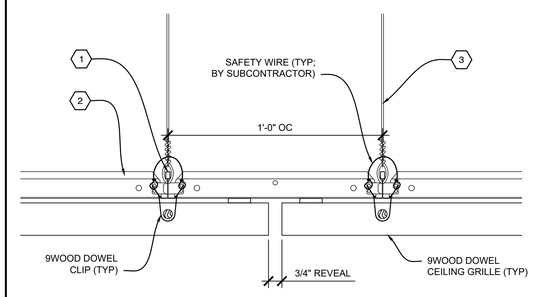

A3 SECTION - REVEAL

SCALE: 1/4" = 1"

NOTES:

- FIXTURES TO BE INDEPENDENTLY SUPPORTED AND NOT TO BEAR ON 9WOOD CEILING SYSTEM.

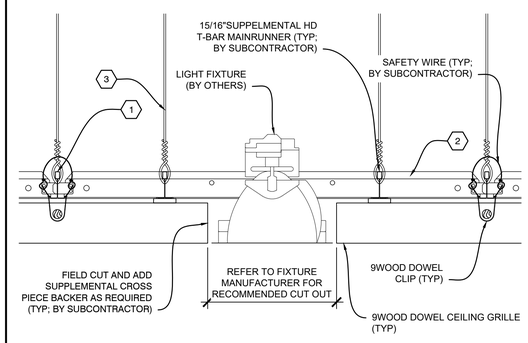

A4 SECTION - LIGHT FIXTURE

SCALE: 1/4" = 1"

9WOOD
Custom made fast

999 SOUTH A STREET
SPRINGFIELD, OR 97477

TOLL-FREE 888.767.9990
FACSIMILE 888.767.9998

WWW.9WOOD.COM
ENGINEERING@9WOOD.COM

PROJECT CERTIFICATIONS: YES ☐ NO ☑

PROJECT

PROJECT NUMBER:
PROPOSAL NUMBER:

REVISION HISTORY

REV#	DATE	DESCRIPTION
10		
9		
8		
7		
6		
5		
4		
3		
2		
1		
0	08.29.25	RELEASE FOR APPROVALS

SHEET INFORMATION

DRAWING TYPE: SHOP DRAWINGS
DRAWN BY: ARZ
STANDARDS REVIEW: RAC
TECHNICAL REVIEW: RAC

THIS DOCUMENT CONTAINS PROPRIETARY INFORMATION OF 9WOOD, INC.
COPYRIGHT © 2025 9WOOD, INC.
ALL RIGHTS RESERVED.

KEY NOTES

1. 15/16" HEAVY DUTY T-BAR MAIN RUNNER (TYP; BY SUBCONTRACTOR)
2. 15/16" T-BAR CROSS TEE (TYP; BY SUBCONTRACTOR)
3. HANGER WIRE (TYP; BY SUBCONTRACTOR)
4. WALL ANGLE AND APPROPRIATE INSTALLATION FASTENER (TYP; BY SUBCONTRACTOR)
5. PERIMETER CONDITION (TYP; BY OTHERS)

SHEET TITLE

SYSTEM DETAILS

Z-501

SHEET 3 OF 3

PATH AND FILENAME: S:_9WOOD\14 PRODUCTS (CUSTOMER FIXES)\3 TEMPLATE SHOP DRAWINGS\02 DOWEL GRILLE\CAD DRAWINGS\Z-501.R
REVISIONS: Wed, September 03, 2025 - 3:14 AM LAST FILE SAVE: ARZ LAST PLOTTED: Wed, September 03, 2025 - 3:14 AM BY: ARZ PAPER SIZE: 11.00X17.00 - 1:1 LAYOUT: B - ANSI B (11.00 X 17.00 IN)