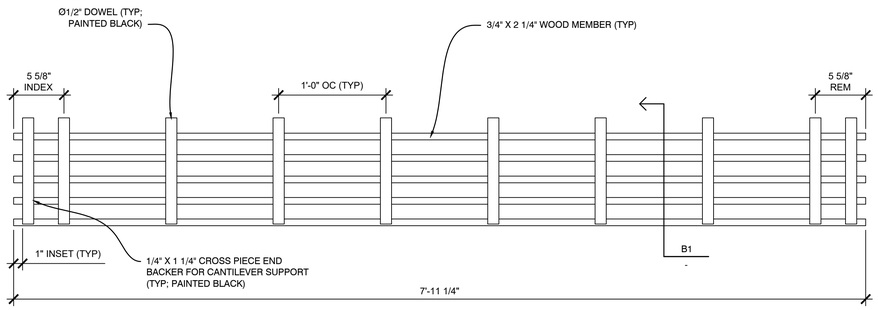


## C1 PLAN VIEW - DOWEL CEILING GRILLE

SCALE: 1 1/2" = 1'

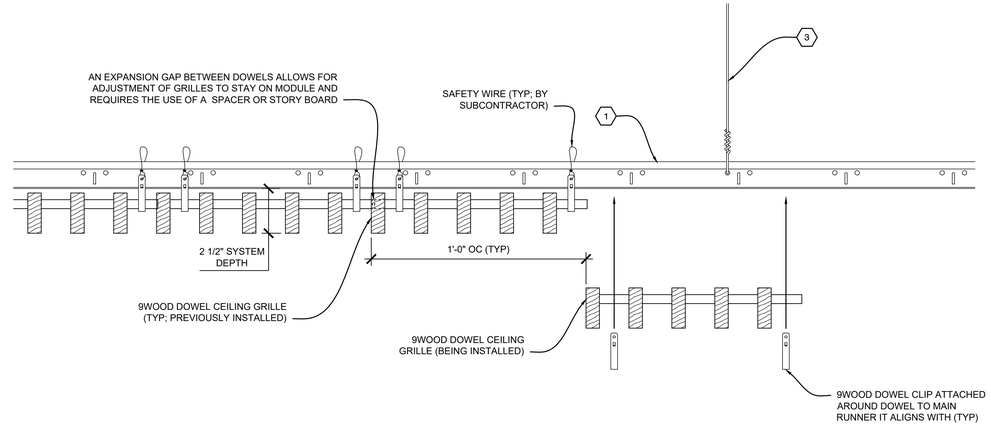


## C3 INSTALLATION PROCESS - DOWEL CEILING GRILLE

SCALE: 1/4" = 1"

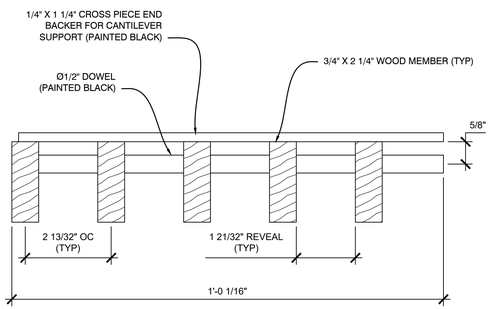


## B1 SECTION - DOWEL CEILING GRILLE

SCALE: 1/2" = 1"

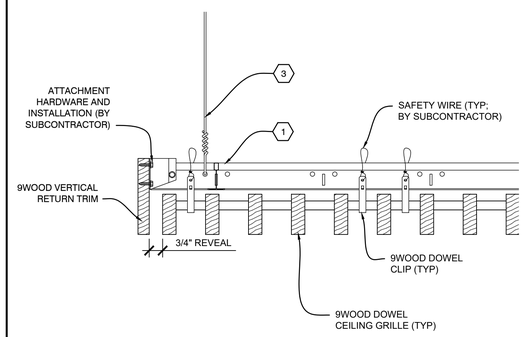


## B2 SECTION - PERIMETER

SCALE: 1/4" = 1"

**NOTES:**

- FIXTURES TO BE INDEPENDENTLY SUPPORTED AND NOT TO BEAR ON 9WOOD CEILING SYSTEM.

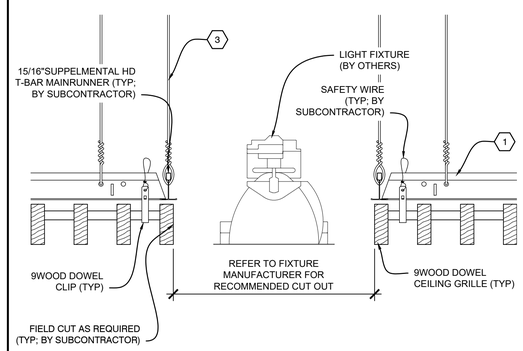


## B3 SECTION - LIGHT FIXTURE

SCALE: 1/4" = 1"

**NOTES:**

- FIXTURES TO BE INDEPENDENTLY SUPPORTED AND NOT TO BEAR ON 9WOOD CEILING SYSTEM.

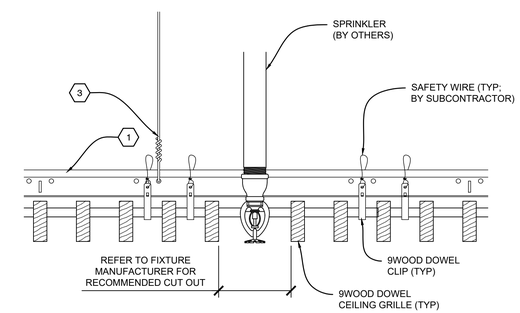


## B4 SECTION - SPRINKLER

SCALE: 1/4" = 1"

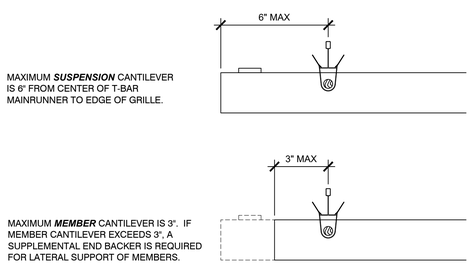


## A1 SECTION - CANTILEVER

SCALE: 1/4" = 1"

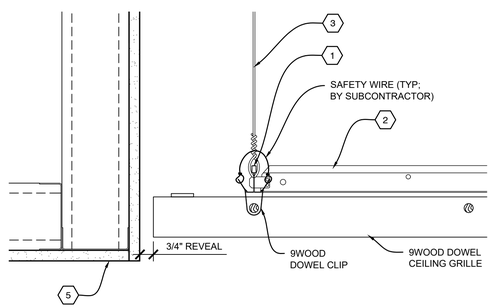


## A2 SECTION - PERIMETER

SCALE: 1/4" = 1"

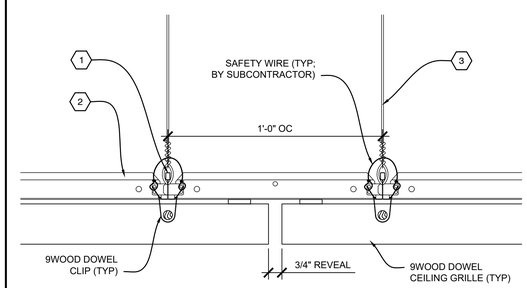


## A3 SECTION - REVEAL

SCALE: 1/4" = 1"

**NOTES:**

- FIXTURES TO BE INDEPENDENTLY SUPPORTED AND NOT TO BEAR ON 9WOOD CEILING SYSTEM.

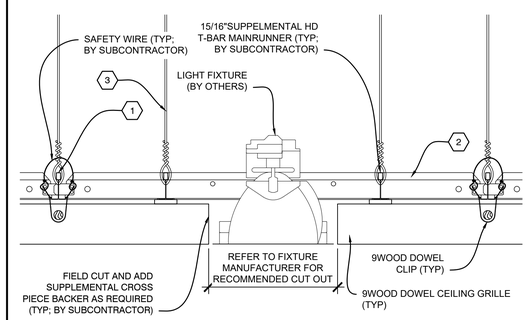


## A4 SECTION - LIGHT FIXTURE

SCALE: 1/4" = 1"


9 WOOD
Custom made fast

999 SOUTH A STREET
SPRINGFIELD, OR 97477

TOLL-FREE 888.767.9990
FACSIMILE 888.767.9998

WWW.9WOOD.COM
ENGINEERING@9WOOD.COM


PROJECT CERTIFICATIONS: YES ☐ NO ☑

PROJECT

PROJECT NUMBER:
PROPOSAL NUMBER:

REVISION HISTORY

| REV# | DATE | DESCRIPTION |
|---|---|---|
| 10 | | |
| 9 | | |
| 8 | | |
| 7 | | |
| 6 | | |
| 5 | | |
| 4 | | |
| 3 | | |
| 2 | | |
| 1 | | |
| 0 | 08.29.25 | RELEASE FOR APPROVALS |

SHEET INFORMATION

DRAWING TYPE: SHOP DRAWINGS
DRAWN BY: ARZ
STANDARDS REVIEW: RAC
TECHNICAL REVIEW: RAC


THIS DOCUMENT CONTAINS PROPRIETARY INFORMATION OF 9WOOD, INC.
COPYRIGHT © 2025 9WOOD, INC.
ALL RIGHTS RESERVED.


KEY NOTES

1. 15/16" HEAVY DUTY T-BAR MAIN RUNNER (TYP; BY SUBCONTRACTOR)
2. 15/16" T-BAR CROSS TEE (TYP; BY SUBCONTRACTOR)
3. HANGER WIRE (TYP; BY SUBCONTRACTOR)
4. WALL ANGLE AND APPROPRIATE INSTALLATION FASTENER (TYP; BY SUBCONTRACTOR)
5. PERIMETER CONDITION (TYP; BY OTHERS)

SHEET TITLE

# SYSTEM DETAILS

Z-501




PATH AND FILENAME: S:\BRAVOS PROJECTS (CUSTOMER)\0-13 TEMPLATE SHOP DRAWINGS\DOWEL GRILLE\CAD DRAWINGS\Z13-5 - 2.5 X 2.5 DOWEL CEILING GRILLE.DWG Saved by ARZ on 8/29/2025 1:08:48 PM (GMT-7) LAYOUT: B1 SECTION - DOWEL CEILING GRILLE