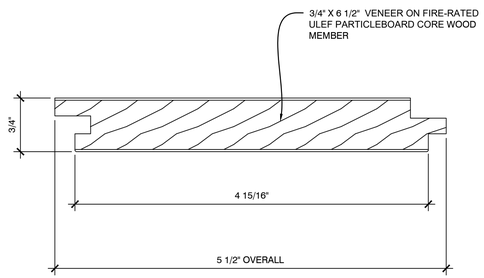

B1 SECTION - T&G KERF REVEAL LINEAR MEMBER
SCALE: 1" = 1"

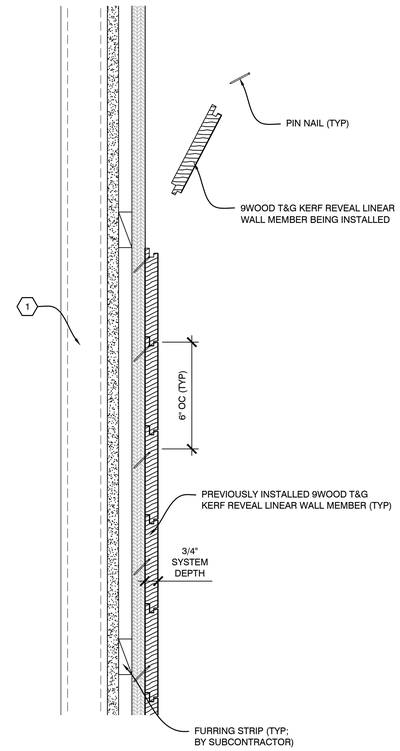

B3 INSTALLATION PROCESS - T&G KERF REVEAL LINEAR MEMBER
SCALE: 1/4" = 1"

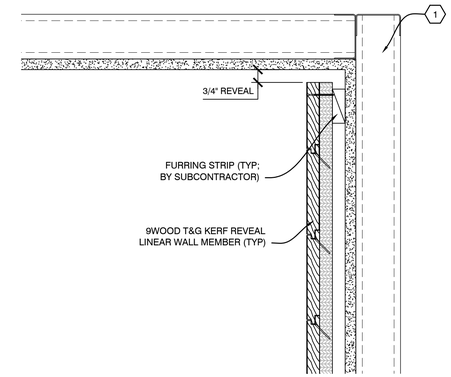

C4 SECTION - CEILING PERIMETER
SCALE: 1/4" = 1"

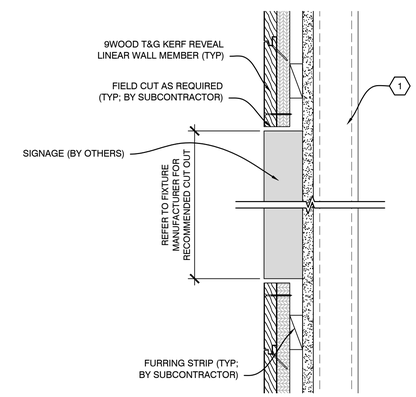

B4 SECTION - WALL PENETRATION
SCALE: 1" = 1"

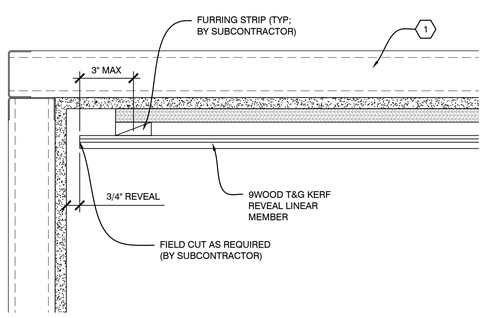

A1 SECTION - PERIMETER
SCALE: 1" = 1"

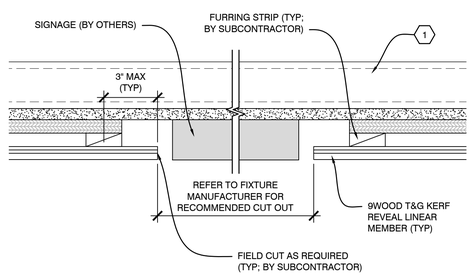

A2 SECTION - WALL PENETRATION
SCALE: 1/4" = 1"

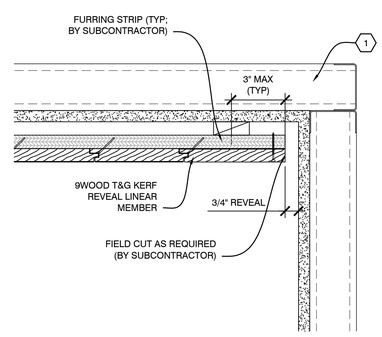

A3 SECTION - PERIMETER
SCALE: 1" = 1"

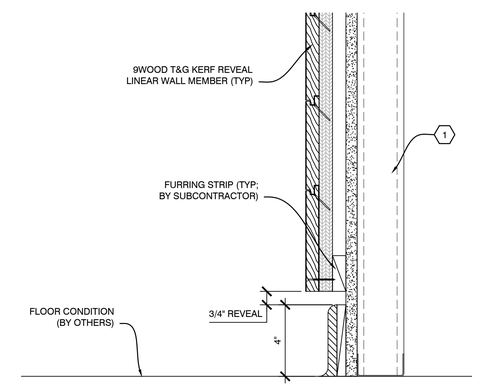

A4 SECTION - FLOOR PERIMETER
SCALE: 1/4" = 1"

9WOOD
CUSTOM MADE FAST

999 SOUTH A STREET
SPRINGFIELD, OR 97477

TOLL-FREE 888.767.9990
FACSIMILE 888.767.9998

WWW.9WOOD.COM
ENGINEERING@9WOOD.COM

PROJECT CERTIFICATIONS: YES ☐ NO ☑

PROJECT

PROJECT NUMBER:
PROPOSAL NUMBER:

REVISION HISTORY

REV#	DATE	DESCRIPTION
10		
9		
8		
7		
6		
5		
4		
3		
2		
1		
0		

SHEET INFORMATION

DRAWING TYPE: SHOP DRAWINGS
DRAWN BY: DMS
STANDARDS REVIEW: RAC
TECHNICAL REVIEW: RAC

THIS DOCUMENT CONTAINS PROPRIETARY INFORMATION OF 9WOOD, INC.
COPYRIGHT © 2025 9WOOD, INC.
ALL RIGHTS RESERVED.

KEY NOTES

1 PERIMETER CONDITION (TYP; BY OTHERS)

SHEET TITLE

SYSTEM DETAILS

Z-501
SHEET 3 OF 3

FILE PATH AND FILE NAME: S:\9WOOD\9-PROJECTS\CUSTOMER\FIRST TEMPLATE SHOP DRAWINGS\CEILING REVEAL LINEAR\CEILING PROPOSAL\9-501.DWG
DATE/TIME: Friday, October 10, 2025 9:48 AM
PLOTTED BY: DAVID MARTIN
PLOTTER: ARCHIVE_ARCH_D.PC3
PAPER SIZE: 36.00 X 24.00 INCHES
PLOT SCALE: 1.0000 = 1 DRAWING UNITS

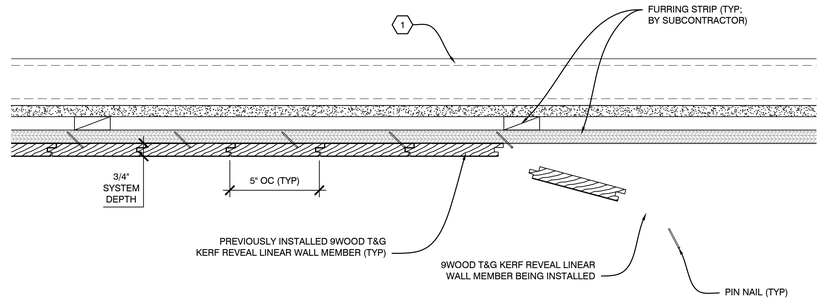

C3 INSTALLATION PROCESS - T&G KERF REVEAL LINEAR MEMBER

SCALE: 1/4" = 1"

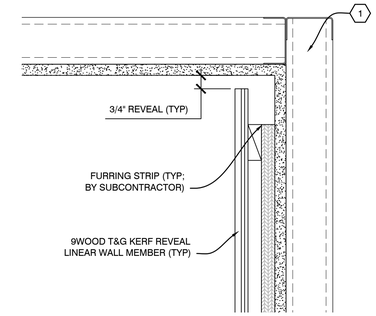

C4 SECTION - CEILING PERIMETER

SCALE: 1/4" = 1"

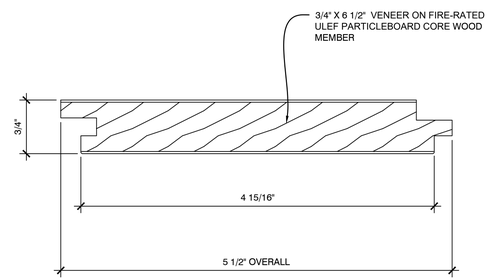

B2 SECTION - T&G KERF REVEAL LINEAR MEMBER

SCALE: 1" = 1"

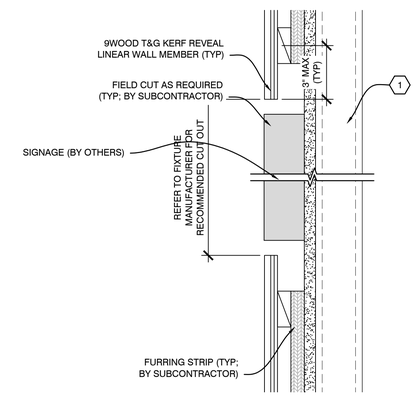

B4 SECTION - WALL PENETRATION

SCALE: 1" = 1"

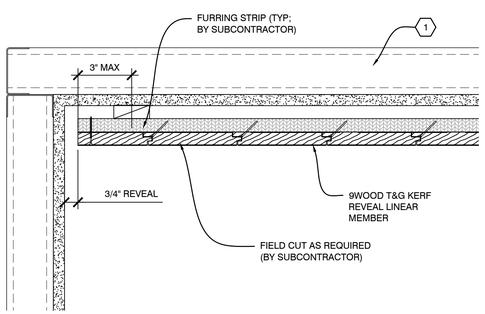

A1 SECTION - PERIMETER

SCALE: 1" = 1"

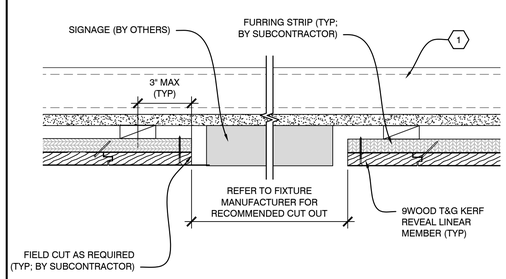

A2 SECTION - WALL PENETRATION

SCALE: 1/4" = 1"

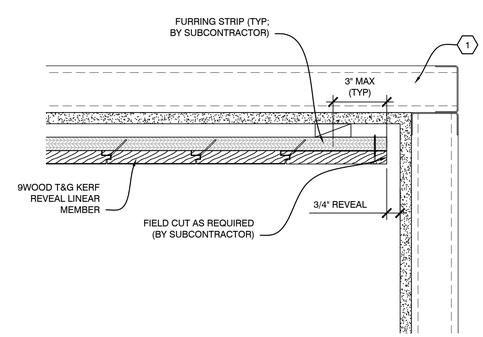

A3 SECTION - PERIMETER

SCALE: 1" = 1"

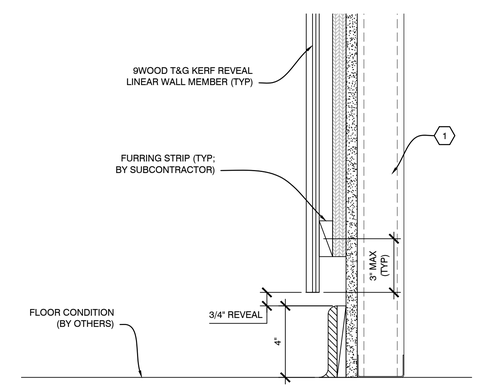

A4 SECTION - FLOOR PERIMETER

SCALE: 1/4" = 1"

9WOOD

CUSTOM MADE FAST

999 SOUTH A STREET
SPRINGFIELD, OR 97477

TOLL-FREE 888.767.9990
FACSIMILE 888.767.9998

WWW.9WOOD.COM
ENGINEERING@9WOOD.COM

PROJECT CERTIFICATIONS: YES ☐ NO ☑

PROJECT

PROJECT NUMBER:
PROPOSAL NUMBER:

REVISION HISTORY

REV#	DATE	DESCRIPTION
10		
9		
8		
7		
6		
5		
4		
3		
2		
1		
0		

SHEET INFORMATION

DRAWING TYPE: SHOP DRAWINGS
DRAWN BY: DMS
STANDARDS REVIEW: RAC
TECHNICAL REVIEW: RAC

THIS DOCUMENT CONTAINS PROPRIETARY INFORMATION OF 9WOOD, INC.
COPYRIGHT © 2025 9WOOD, INC.
ALL RIGHTS RESERVED.

KEY NOTES

1 PERIMETER CONDITION (TYP; BY OTHERS)

SHEET TITLE

SYSTEM DETAILS

Z-501

SHEET 3 OF 3

PATH AND FILENAME: S:\LIBRARY\4 PRODUCTS\CUSTOMER VIEWS\1 TRIBUTA TS SHOP DRAWINGS\2025 KERF REVEAL LABRAVA\CONTENT\PROPOSED\Z-501.DWG
DATE PLOTTED: Thursday, October 30th, 2025 AT 8:46 AM EDT BY: DMS
LAYOUT: SHEET 3 OF 3 PAPER SIZE: 36.00 X 24.00 IN