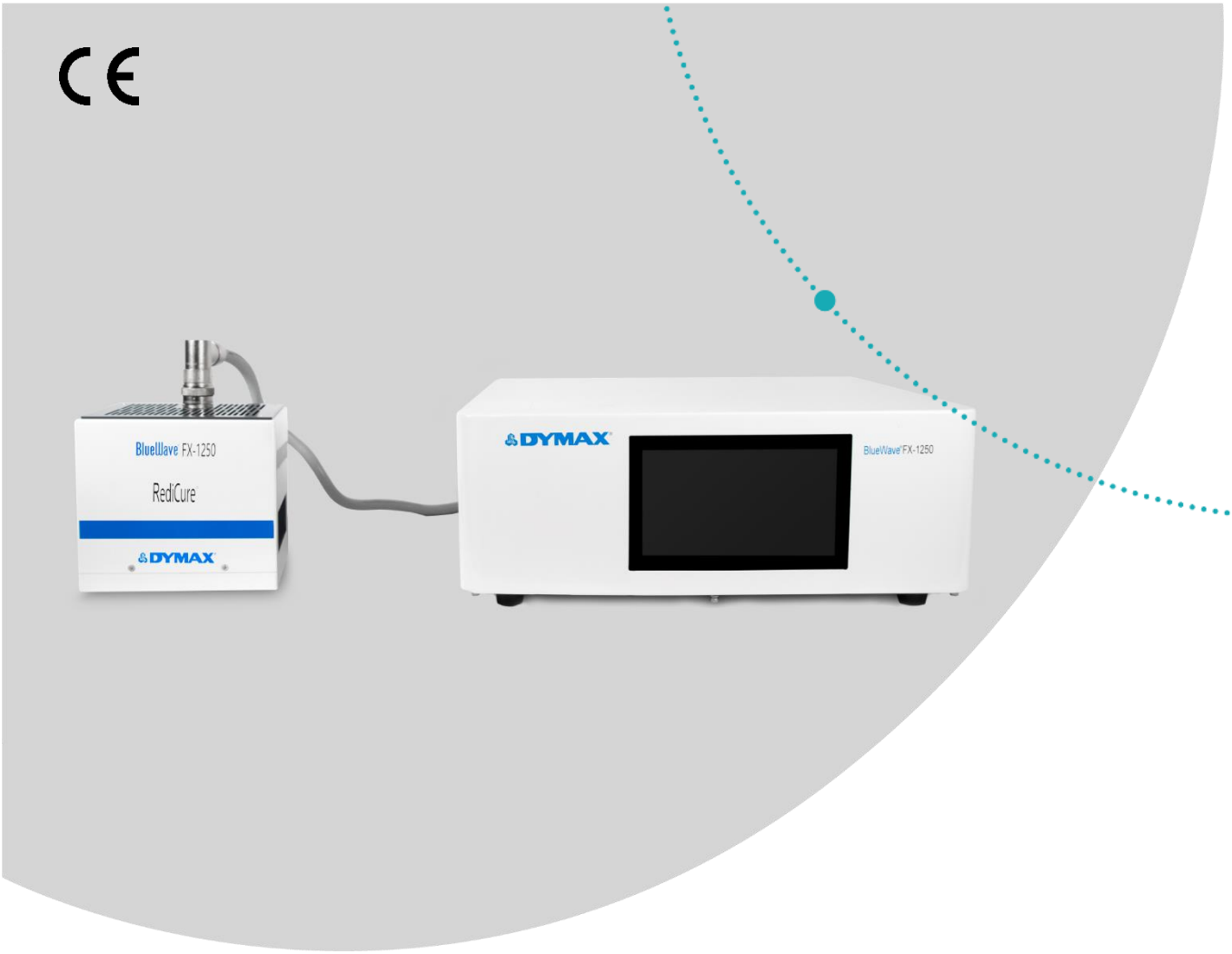

BlueWave® FX-1250

Large-Area LED Flood System
User Guide

DYMAX®

About Dymax

UV/Visible light-curable adhesives. Systems for light curing, fluid dispensing, and fluid packaging.

Dymax manufactures industrial, light-curable, epoxy, and activator-cured adhesives. We also manufacture a complete line of manual fluid dispensing systems, automatic fluid dispensing systems, and light-curing systems. Light-curing systems include LED light sources, spot, flood, and conveyor systems designed for compatibility and high performance with Dymax adhesives.

Dymax adhesives and light-curing systems optimize the speed of automated assembly, allow for in-line inspection, and increase throughput. System designs enable stand-alone configuration or integration into your existing assembly line.

Please note that most dispensing and curing system applications are unique. Dymax does not warrant the fitness of the product for the intended application. Any warranty applicable to the product, its application, and use is strictly limited to that contained in the Dymax standard Conditions of Sale. Dymax recommends that any intended application be evaluated and tested by the user to ensure that desired performance criteria are satisfied. Dymax is willing to assist users in their performance testing and evaluation by offering equipment trial rental and leasing programs to assist in such testing and evaluations. Data sheets are available for valve controllers or pressure pots upon request.

Contents

Introduction **4**
Intended Audience 4
Where to Get Help 4

Safety **4**

Product Overview **5**
Controller Main Components 6

Unpacking **7**
Unpacking and Inspecting Your Shipment 7
Parts Included 7

System Installation **8**
System Assembly 8
System Cooling 8
Wiring and Connections 9
Connections 10

I/O Interface Summary **11**
PLC UV Control 12
Status Output 13

Operation **14**
Start Up 14
Main Window Settings 14
Setting the Power 16
Setting the Cure Time 16
Running the System 16
Program Setting 16

Settings **17**
Brightness 18
Clock and Calendar Settings 18
Resetting the Emitters' LED ON Time 18
Changing the Password 18
System Reset 18
System Log 19

PLC Mode **20**

Spare Parts & Accessories **21**

Specifications **22**

Validation **24**

Declaration of Conformity **25**

Warranty **27**

Introduction

This guide describes how to set up, use, and maintain the BlueWave® FX-1250 LED flood-curing system safely and efficiently.

Intended Audience

This user guide is meant for experienced process engineers, technicians, and manufacturing personnel. If you are new to high-intensity LED light sources and do not understand the instructions, contact Dymax Application Engineering for answers to your questions before using the equipment.

Where to Get Help

Dymax Customer Support and Application Engineering teams are available by phone and email in the United States, Monday through Friday, from 8:00 a.m. to 5:30 p.m. Eastern Standard Time, and in Germany, Monday through Friday, from 8:00 a.m. to 5:00 p.m. Central European Time. You can also email Dymax at info@dymax.com or Dymax Europe GmbH at info_de@dymax.com. Contact information for additional Dymax locations can be found on the back cover of this user guide.

Additional resources are available to ensure a trouble-free experience with our products:

- Detailed product information on our website www.dymax.com
- Dymax adhesive Product Data Sheets on our website
- Safety Data Sheets (SDS) provided with shipments of Dymax adhesives

Safety

WARNING! *Under NO circumstances should the interconnect cable from the controller to the LED emitter be connected or disconnected while power to the unit is on. This procedure is usually called "hot swapping" and should not be performed as it could cause damage to the controller or the emitter. Always power down the equipment before disconnecting or connecting any of these devices.*

WARNING! *If you use this UV light source without first reading and understanding the information in the* ***UV Light Safety Guide****, SAF001, injury can result from exposure to high-intensity light. To reduce the risk of injury, please read and ensure you understand the information in that guide before assembling and operating the Dymax UV LED light source.*

To use the BlueWave FX-1250 system safely, it must be set up and operated in accordance with the instructions given by Dymax. Using the system in any other manner will impair the protection of the system. Dymax assumes no liability for any changes that may impair the protection of the BlueWave FX-1250 system.

This device falls under IEC 62471 Risk Group 3 for UVA and Blue Light emissions:

WARNING! *UV emitted from this product. Avoid eye and skin exposure to unshielded products.*

WARNING! *Possibly hazardous optical radiation emitted from this product. Do not look at operating lamp. Eye injury may result.*

WARNING! *Possibly the thermal exhaust hole temperature from emitter will be high, please don't touch the heatsink by hand*

WARNING! *The BlueWave FX-1250 is designed and certified to operate with the Dymax supplied 16 Amp, 1.5 mm², 3 conductor power cord. Do not use any other non-standard power cord.*

WARNING! *The BlueWave FX-1250 is designed and certified to operate as instructed within this document. Alteration of the system or its component installation may pose a shock hazard.*

Product Overview

The BlueWave FX-1250 is a high-intensity LED flood system used for curing light-curable materials. The unit is designed to be integrated into a larger system, such as an automated manufacturing system, or used with a light shielding enclosure to create a bench-top curing station.

The BlueWave FX-1250 can be used for manual and automated process applications and is composed of a controller and LED flood emitter, which is available in three different wavelengths: VisiCure (405 nm), PrimeCure (385 nm), and RediCure (365 nm).

The controller portion consists of an integrated control module and power supply. It allows complete control of an LED emitter, including setting intensity, timing, operation, and programming, while reporting the identity, operating parameters, and status of the emitter. It is designed to be used with any of the three LED emitter wavelengths. It is available in one channel (1CH) and two channel (2CH) configurations. The 2CH supports any two emitters, regardless of wavelength, working at the same time.

System Name	BlueWave FX-1250
Controller Model	BlueWave FX-1250 1CH BlueWave FX-1250 2CH
Emitter Model	BlueWave FX-1250 RediCure BlueWave FX-1250 PrimeCure BlueWave FX-1250 VisiCure

The BlueWave FX-1250 functions as a flood-curing system with a 127 mm x 127 mm (5 in x 5 in) irradiated curing area.

The unit can be operated in admin mode (unrestricted control) or production mode (restricted control) which allows for process management via access restrictions.

The unit can be controlled as well by Programmable Logic Controller (PLC) for automation applications.

LED technology within the BlueWave FX-1250 LED Flood System allows for instant on/off activation without the need for a warm-up period and is also rated for continuous operation.

Figure 1.
BlueWave FX-1250 LED Flood Curing System

Controller Main Components

The interactive parts of the controller include the Display Screen, Power Switch, Power Input Receptacle, Output CH1, Output CH2, RS232 Receptacle, RS485 Receptacle and PLC Interface.

Figure 2
Controller Front Panel

Figure 3
2CH Controller Back Panel

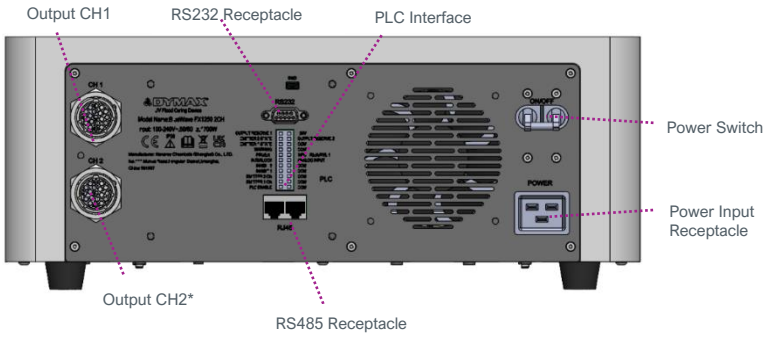

**Note: Figure 3 is of a 2CH controller. 1CH controllers do not have Output CH2*

Display Screen: Controls the operation of the controller and displays the operation parameters.

Power Switch: Controls the controller's power.

Power Input Receptacle: Used to connect the power cord.

Output CH 1, CH2: Used to connect the interconnect cable. There is no difference between the two receptacles, and they can be connected interchangeably.

RS485 & RS232 Receptacle: Used to communicate with a UVCS V3.0 conveyor. No connection is required when the controller is used alone.

Table 1.
Labels

Warning Labels	Product Information Label	High Temperature Caution Label	Emitter Wavelength Label (RediCure, PrimeCure, or VisiCure)
 RISK GROUP 3 **CAUTION**: UV emitted from this product. Eye or skin irritation may result from exposure. Use appropriate shielding.			

Unpacking

Unpacking and Inspecting Your Shipment

Upon arrival, inspect all boxes for damage and notify the shipper of box damage immediately. Open each box and check for equipment damage. If parts are damaged, notify the shipper and submit a claim for the damaged parts. Contact Dymax so that new parts can be shipped to you immediately.

The parts below are included with your purchase configuration. If parts are missing from your order, contact your local Dymax representative or Dymax Customer Support to resolve the problem.

Inspect the glass for any damage or residue on the surface. Carefully clean the glass with the alcohol swab. Take care not to touch the glass with bare hands, as any residue left on the window can adversely affect performance on the unit.

Parts Included

The parts below are included with your purchase configuration

Controller Only*

- BlueWave FX-1250 1CH or 2CH Controller (model as selected at time of purchase)
- Power Cord
- BlueWave FX-1250 LED Flood System User Guide
- UV-Light Safety Guide (SAF001)
- Terminal Block (attached to the controller, but not plugged in, with jumper wires installed)
- Footswitch
- Safety Eyewear

Emitter Only*

- BlueWave FX-1250 Emitter (RediCure, PrimeCure, or VisiCure, model as selected at time of purchase)
- UV-Light Safety Guide (SAF001)

** Orders of individual controllers and emitters must purchase interconnect cables separately.*

Complete Kit

- All parts listed above included
  Note: *only the 1CH Controller is available in a Complete Kit*
- Interconnect Cable (Type I&L)

Figure 4.
Components of a BlueWave FX-1250 -Controller Only
88804/88805/88846/88847/88850/88851

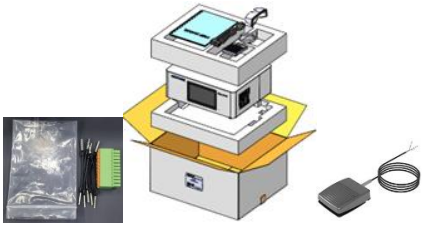

Figure 5.
Components of a BlueWave FX-1250 -Emitter Only
88801/88802/88803

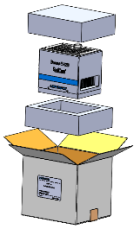

Figure 6.
Components of a BlueWave FX-1250 - Complete Kit
88848/88856/88859/88849/88857/88860/88855/88858/88861

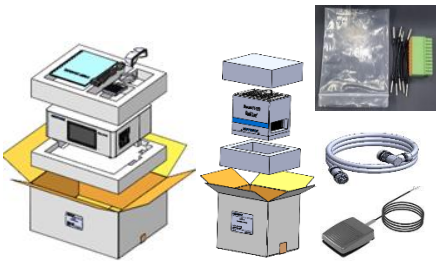

System Installation

System Assembly

The system includes two major parts, the controller and emitter. The two parts are shipped separately.

To assemble the two parts together, plug one side of the interconnect cable into the controller and the other side into the emitter (Figure 7).

NOTE: *Be careful to keep the glass at the bottom of the emitter clean. To avoid leaving fingerprints on the glass, do not touch the glass with bare hands.*

Figure 7.
Interconnect Cable Installed

WARNING! *The BlueWave FX-1250 is designed and certified to operate as instructed within this document. Alteration of the system or its component installation may pose a shock hazard.*

System Cooling

The system can be used in various scenarios with additional mounting fixtures or Dymax accessories, i.e., as a bench-top unit with a stand on a chamber, as part of a conveyor, etc. This system should only be operated in a location that provides proper cooling. Location requirements are as follows:

- For proper cooling of the unit, upper intake and lower exhaust must not be blocked.
- Minimum recommended clearance is 8 inches [200 mm].
- Note that the lower exhaust may have one side blocked for installations where two units are side by side. The system will operate safely but run hotter.

Figure 8.
Recommended Cooling Clearance

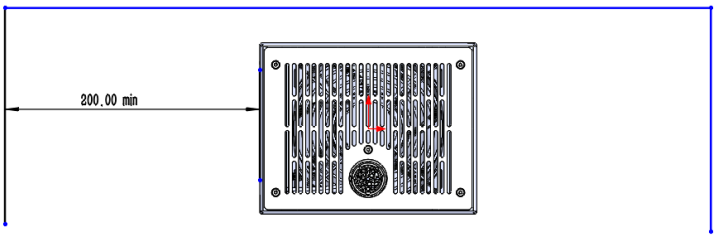

Wiring and Connections

All the wire and cable connections are located on the rear of the controller or the top of emitter.

Figure 9.
Controller Connections

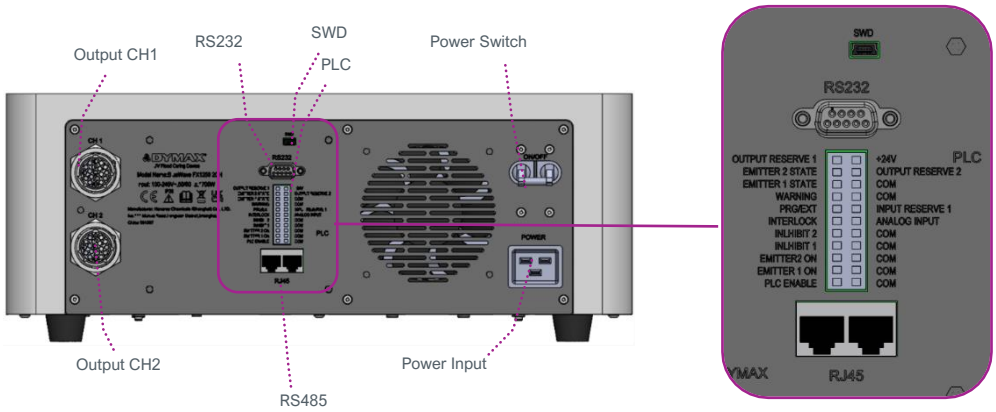

Power Switch: Turns the unit on and off.

Power Input: The power cord plugs in here. Only use the power cord supplied by Dymax (Figure 10) as the power cord supplied with the controller is specifically designed and certified to work with the controller.

WARNING! *The BlueWave FX-1250 is designed and certified to operate with the Dymax supplied 16 Amp, 1.5 mm², 3 conductor power cord. Do not use any other non-standard power cord.*

Figure 10.
Power Cord

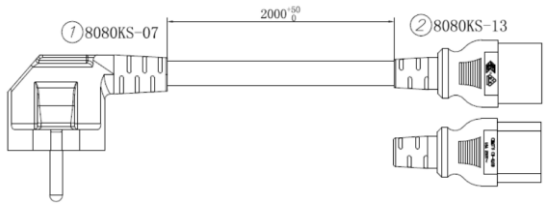

Figure 11.
Interconnect Cable for Output Channels 1 & 2

84025/84026

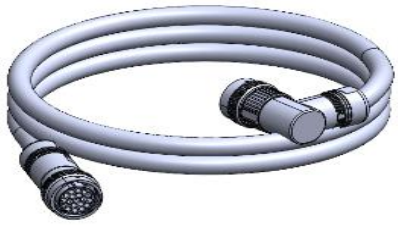

Output CH1/CH2: Output power and control signal to emitter. Only use the interconnect cable made by Dymax (Figure 11) as this interconnect cable is specifically designed for this system. One controller in 2CH configuration can support up to two emitters at the same time.

SWD: Burn in or update the software into controller.

RS232: Conduct communication to computer.

PLC: Controlled by PLC program.

RS485: Controlled by internet.

Connections

The interconnect cable has two 15P plugs that connect the controller to the emitter.

Plugging the interconnect cable into the controller: Roll the plug clockwise while inserting to plug the cable in. Roll the plug counterclockwise while removing to unplug the cable (Figure 12).

Plugging the interconnect cable into the emitter: Roll the plug clockwise while inserting to plug the cable in. Roll the plug counterclockwise while removing to unplug the cable (Figure 13).

Figure 12.
Plug Interconnect Cable into Controller

Figure 13.
Plug Interconnect Cable into Emitter

Figure 14.
Key (Left) and Keyway (Right)

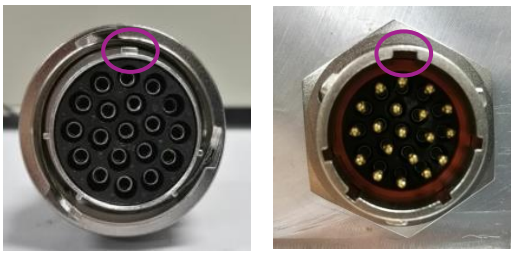

***Attention**: When plugging in the female and male connectors, observe the key and keyway of each connector. The key should align with the keyway (Figure 14).*

Plugging the footswitch or light shield into the controller:

1. Using a jumper wire, connect PLC ENABLE (Input Pin 1) to the opposite COM port (2).
2. Using a jumper wire, connect the INHIBIT (Input Pins 7, 9) for each emitter being used to its opposite COM port.
3. Connect the footswitch or light shield into the EMITTER ON (Input Pins 3, 5) for each channel into its opposite COM port.

To control two emitters with a single footswitch, jumper both INHIBITS, and the EMITTER 2 ON, then plug the footswitch into EMITTER 1 ON and the opposite COM port.

Figure 15.
Plug Footswitch into Controller

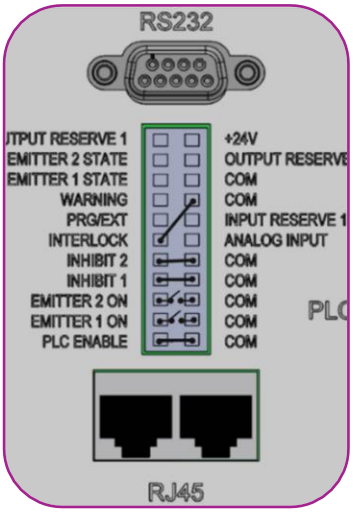

Figure 16.
Example: Footswitch Connection

Note: The Input/Output terminal block is included in the packaging, with the jumper wires inserted. When the terminal block is installed, the controller will enter PLC mode. PLC mode disables commands and parameter setting from the HMI. To set parameters from the HMI, the terminal block must be removed, or the connection between the PLC Enable and COM pins (1 and 2) must be disconnected.

To allow setting of parameters by analog input: start with the standard installation described for the footswitch and light shield. Add an additional jumper between PRG/EXT (13) and COM (18). Connect to Analog Input (12) and COM (16) for input and +24V (22) and COM (18) to add 24V power.

I/O Interface Summary

Table 2 below shows the summary of all signals on the PLC Connector.

Table 2.
I/O Interface

Signal Name / Description	PIN #	Signal Level	
		Asserted	De-Asserted
INPUTS			
Input Reserve 1	14	Do Not Use	
ANALOG INPUT Only used in PLC EXT mode Sets Emitter intensity level (0~1V=0% output,1V=10% output, 10V=100% output)	12	0 – 10 VDC	N/A
INTERLOCK	11	0 VDC, GND	(Open)
PLC ENABLE	1	0 VDC, GND	(Open)
Emitter 1 ON	3	0 VDC, GND	(Open)
Emitter 2 ON	5	0 VDC, GND	(Open)
PRG/EXT	13	0 VDC, GND(EXT)	(Open)(PRG)
INHIBIT 1	7	0 VDC, GND	(Open)
INHIBIT 2	9	0 VDC, GND	(Open)
OUTPUTS			
PLC POWER (1) (24V, 50mA maximum)	22	Always On	
WARNING	15	0 VDC, GND	Open
EMITTER 1 STATE	17	0 VDC, GND	Open
EMITTER 2 STATE	19	0 VDC, GND	Open
Output Reserve 1, Output Reserve 2	21,20	Do Not Use	
RETURNS (These pins are common and may be used interchangeably)			
COM	2,4,6,8,10,16,18	Common Grounds	

(1) PLC power channel is a 24V source available for use to drive PLC logic but must be current limited using pull-down resistors to protect the BlueWave FX-1250 when directly attached to the I/O channels through the PLC connector.

(2) CHASSIS Ground connections do not share a common connection with signal returns and cannot be interchanged with signal returns.

PLC UV Control

PLC switching may be driven by manual switch, relay, or optical coupler. Only analog intensity uses a voltage input to the PLC.

To use the PLC mode, the **PLC ENABLE** (input pin 1) must be pulled down to low by grounding to the **COM** ground point

The PLC **INTERLOCK** (input Pin 11) disables all the UV output when it is de-asserted. It is pulled down before other control signal in PLC mode.

The PLC **INHIBIT 1** (input Pin 7) and **INHBIT 2** (input Pin 9) disables each channel's UV output when it is de-asserted. After the **INTERLOCK is** pulled down, the **INHIBIT 1** or **INHIBIT 2** is also pulled down.

After above signals are pulled down, the PLC can control the UV on/off using the Emitter 1 ON (input Pin 3) or Emitter 2 ON (input Pin 5). When this input is pulled down by grounding to **COM** ground, the UV LED will turn on.

The PLC can also control the intensity of the UV output.

- When the **PRG/EXT** (input Pin 13) is pulled down low by grounding to **COM** ground, the Intensity will be controlled by the EXTERNAL ANALOG INTENSITY input voltage.
- The **ANALOG INPUT (**input Pin 12) is an analog voltage input. The voltage range is 0 to 10VDC.

Any setting below 1 VDC will set the Intensity to 0% and each 1V additional volt increases intensity by 10%. (Example: 1V = 10%, 5V = 50%, 10V = 100%). The example connection for the PLC control signal is shown in Figure 17.

Figure 17.
PLC Connection Example

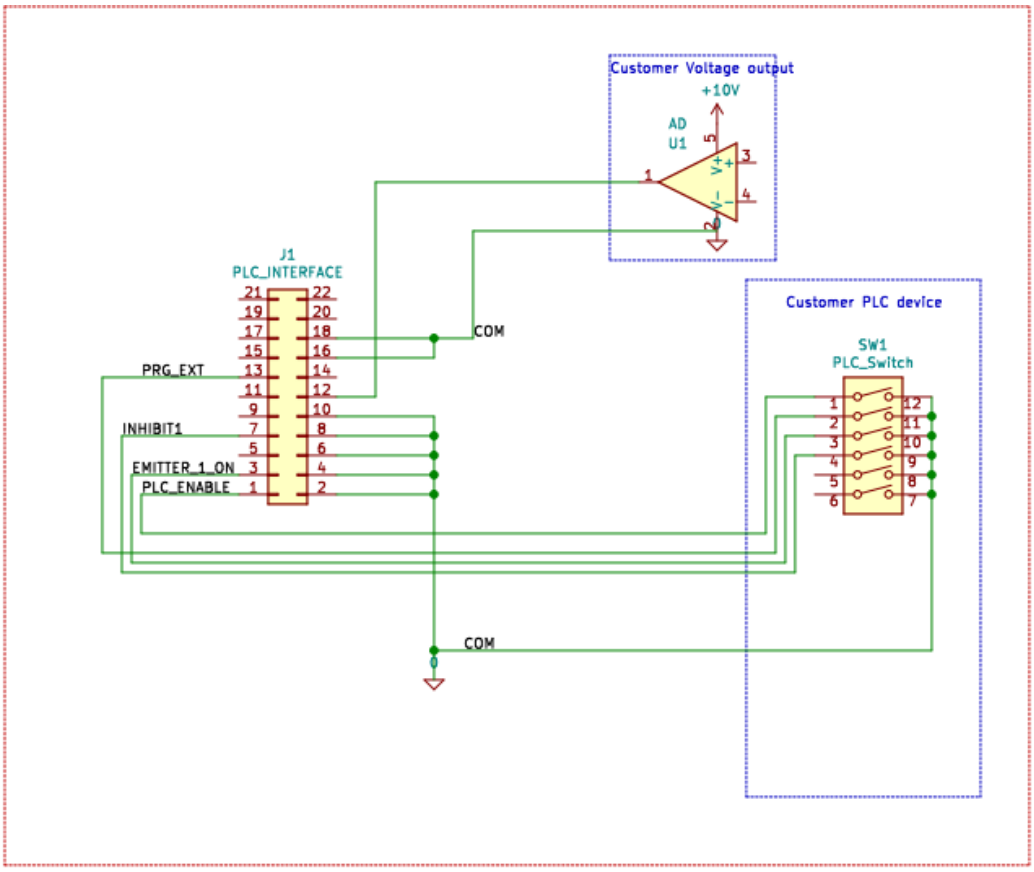

Figure 18.
Typical Application 1

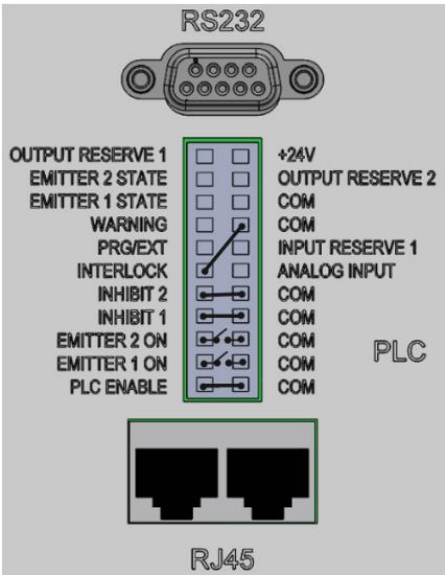

Figure 19.
Typical Application 2

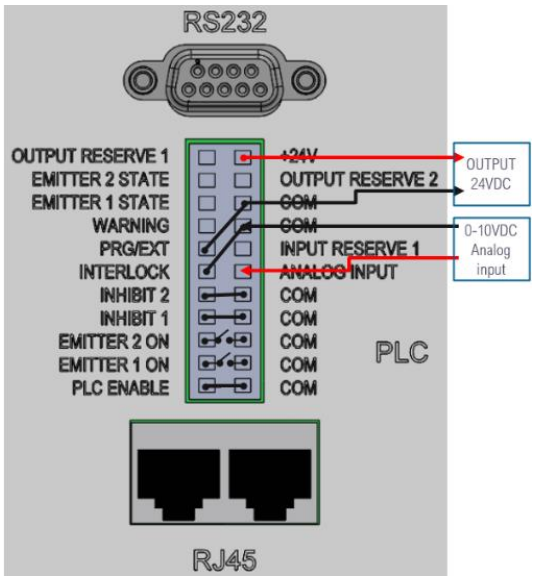

***Note**: The Input/Output terminal block is included in the packaging, with the jumper wires inserted. When the terminal block is installed, the controller will enter PLC mode. PLC mode disables commands and parameter settings from the HMI. To set parameters from the HMI, the terminal block must be removed, or the connection between the PLC Enable and COM pins (1 and 2) must be disconnected.*

Status Output

There are three status outputs. They are driven by an optical coupler. These outputs work in any mode and can be used as status inputs for PLC or any status display/monitor purpose.

- **WARNING -** Output low indicates the unit is working normally.
- **Emitter 1 & 2 State -** Output low indicates the UV LEDs are ON.

An example application of these signals is shown in Figure 20.

PLC Power channel is a 24V source available for use to drive PLC logic but must be current limited using pull-down resistors to protect the FX-1250 when directly attached to the I/O channels through the PLC connector. The support current is 50 mA max

Figure 20.
Status Outputs Connection Using On-Board 24V Source

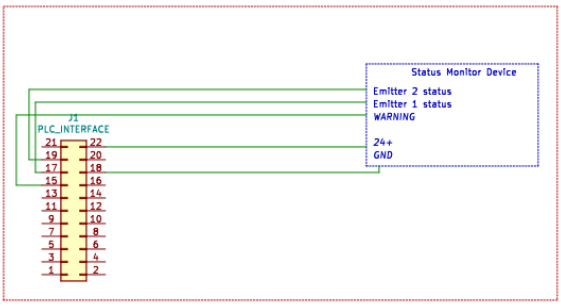

Figure 21.
PLC Status Outputs Using Customer-Supplied 24V Source

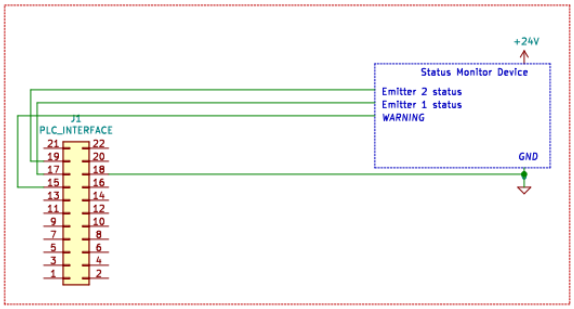

Figure 22.
Examples of Customer Configurations for Monitoring Outputs

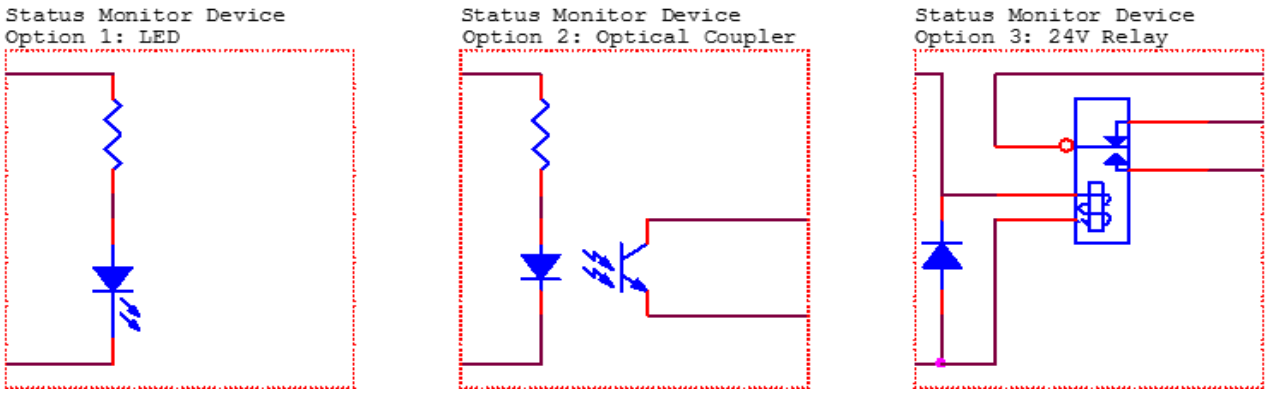

Operation

Start Up

1. Verify all connectors are firmly plugged into the rear panel of the BlueWave FX-1250 controller and emitter.
2. On the rear panel of the controller, move the power switch to the ON position (up direction).
3. The start-up window (Figure 23) will appear for several seconds as the system initializes.

Figure 23.
Start-Up Window

After starting up, the main window (Main Window Settings

In the main window, the operator can:

1. Set each channel's power and cure time.

2. Start or stop each channel or all channels.

4. Figure 24) appears.

   WARNING! *Emitters must be installed correctly before power up. If no emitter is installed, the controller is not operable. Power off the controller and install at least one emitter.*

5. The system is now ready to have emitter parameters set.

Main Window Settings

In the main window, the operator can:

3. Set each channel's power and cure time.

4. Start or stop each channel or all channels.

Figure 24.

Main Window

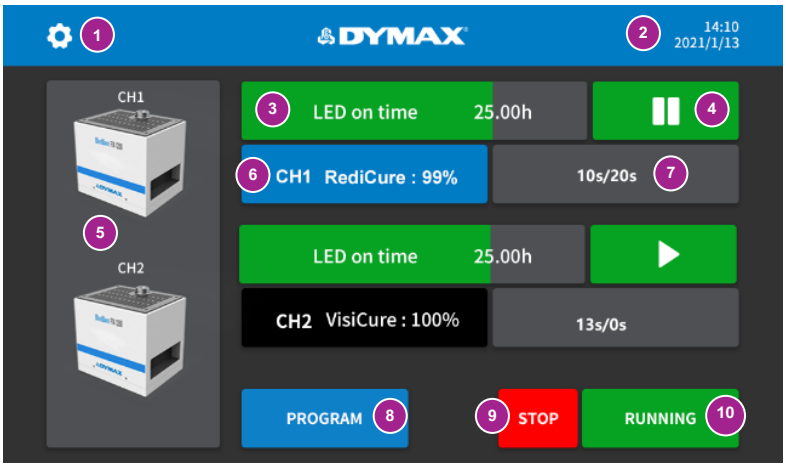

Table 3.

Main Window Functions

Number	Name	ICON	Description
1	System setting		Press to enter the system setting window to set the system parameters (clock, calendar, password, LED on time, brightness).
2	Calendar and clock	14:10 2021/1/13	Display clock and calendar.
3	Progress bar	LED on time 25.00h	If the cure time is not zero, the green bar increases to indicate the progress of a cure time count. If the cure time is zero, the green bar does not increase. LED on time displays the total time the LED has been on.
4	Play/Stop button		Each channel controls one emitter. The green color indicates the emitter is on. is pressed to start the emitter. is pressed to stop the emitter. The red indicates the emitter is off when you just plug one emitter. The dark grey indicates no emitter is plugged in. Power off the controller to install an emitter. The red and dark grey play button have no function when pressed.
5	Emitter & parameters		Each channel can be connected to an emitter. It displays the channel number on top.
6	Power and type button	CH1 RediCure : 99% NA	Displays the channel number, emitter type, power set. The display will be one of four colors: Blue -- RediCure, Black -- VisiCure Grey -- PrimeCure Red -- NA Press to set the power of this channel. If no emitter is plugged in, the channel displays NA.
7	Timer	10.0s/20s	Counts down to zero if the cure time is not zero. Counts up if the cure time is zero. Press to set the cure time.
8	Program	PROGRAM	Press to save and load stored setting parameters.
9	Stop button	STOP	Press to stop all emitters.
10	Run button	RUN	Press to start all emitters. When at least one of the emitters is on, the 'RUN' turns to 'RUNNING'.

Setting the Power

The operation steps are:

1. On the main window, press the power button (Table 3, #6) to enter the power window (Figure 25).
2. Enter the desired value using the pad and press enter. (10%~100%). The new value will display in the bar.
3. If no change is needed, press the back arrow in the top left corner to exit the power window.

Figure 25.
Power Window

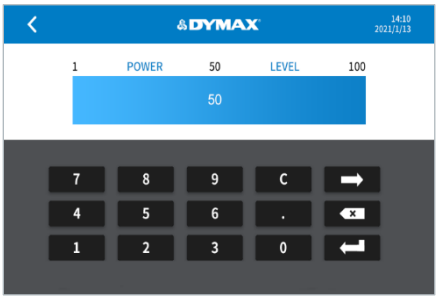

Setting the Cure Time

1. On the main window, press the timer (Table 3, #7) to enter the cure time window (Figure 26).
2. Enter the desired value using the pad and press enter. (0-9999 seconds). The new value will display in the bar.

   Set the cure time to 0 sec. to run the emitter until it is manually stopped.

   Set a value greater than 0 sec. to run the emitter automatically for that duration.

   Cure times can be set in intervals of 0.1 sec.
3. If no changes are needed, press the back arrow in the left top corner to exit the cure time window.

Figure 26.
Cure Time Window

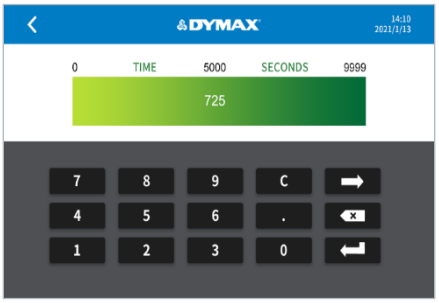

Running the System

1. After power and cure time have been set, the emitters can be run.
2. Each emitter channel can be operated separately using the play/stop button (Table 3, #4) on the main window.
3. To operate all emitter channels together, the run (Table 3, #10) and stop (Table 3, #9) buttons on the main window can be used to start and stop the emitters.

Program Setting

To save your set values in the main window, press program (Table 3, #8) on the main window to enter the program setting window. You are required to enter the user's password correctly before the program window (Figure 29) loads.

There are 16 slots for selection. Their default names are Program # (1-16). Only one slot can be selected at a time.

The operation steps are:

1. Press on a program slot. The program slot will change to blue when selected. The parameters stored in that program slot will display in the white bar.
2. Press the Rename button to rename the slot.
3. Press the Save button to save the current set values (channel number, power, and cure time) to that program slot.
4. Press the Load button to load the slot's value and exit to the main window.
5. Press the Delete button to erase a slot's name and set the stored values of the slot to 0.
6. Press the back arrow in the top left corner to exit the program window.

Settings

Press the system setting button on the main window. A password input window (Figure 27) will appear. The password must be entered to enter the System Settings window.

Press the input bar on the password input window to activate the keyboard (Figure 28).

The default password is set to “1234”.

Figure 27.
Password Input Bar

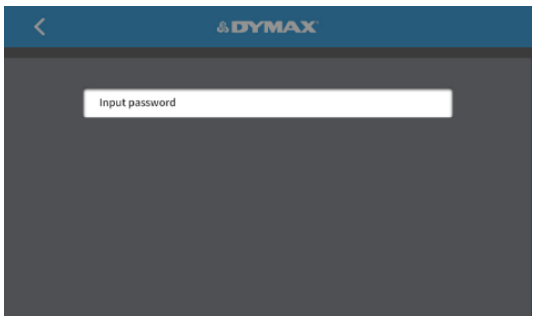

Figure 28.
Keypad for Password Window

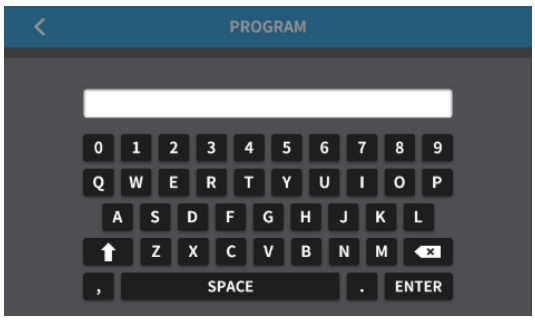

Once the password is entered, the System Settings window (Figure 30) will appear.

Figure 29.
Program Window

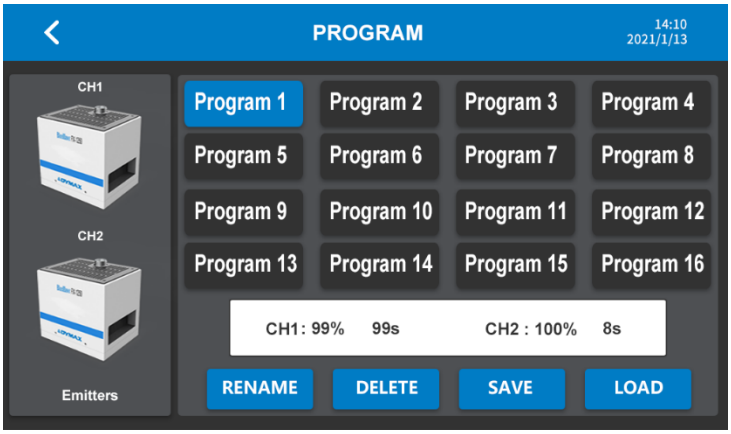

Figure 30.
System Settings Window

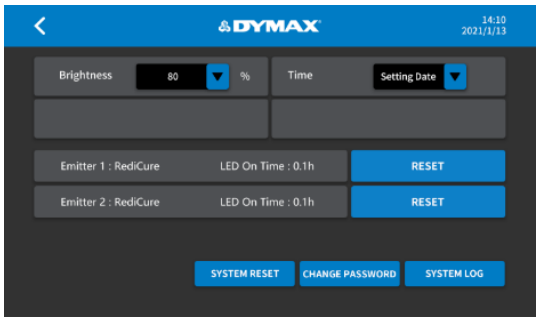

Figure 31.
Brightness Adjustment Bar

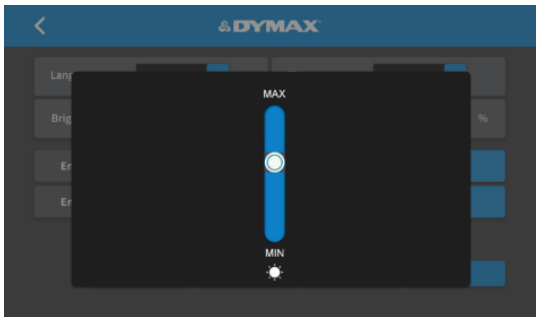

Brightness

1. On the system settings window, press on the brightness dropdown button (Figure 31).
2. Move the bar up and down to adjust the brightness of the screen.
3. Press the back arrow in the left top corner to exit.

Clock and Calendar Settings

1. On the system settings window, press the time dropdown arrow.
2. Press the clock in the window to input the date and time by using the pad.
3. Press the back arrow on the top left to exit.

Figure 32.
Clock and Time Input Pad

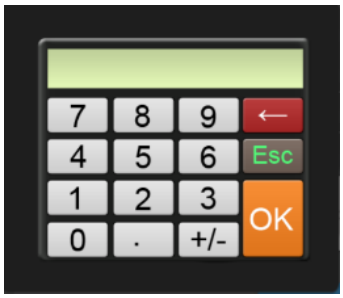

Resetting the Emitters' LED ON Time

The emitter on time appears in the gray bar (Figure 33) on the System Settings window.

Once the emitter is on, the LED on time will begin counting.

If an emitter is changed for a channel, the LED on time must be cleared for it to recount in that channel.

Press the Reset button located to the right of the emitter LED on time to clear it.

Figure 33.
Emitter On Time

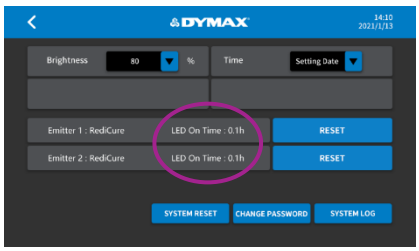

Changing the Password

1. Press the change Password button on the system settings window to enter the Change Password window.
2. Press New Password to input the new password.
3. Press "Confirm New Password" and input the new password again. The two input passwords must be the same.
4. Press the back arrow in the left top corner to exit.

Figure 34.
Change Password Window

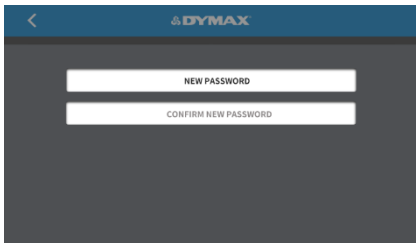

System Reset

Press the System Reset button on the System Settings window to:

- Reset the password to the default:1234
- Reset the program names and values to the default

System Log

Checking the Alarm History Log

To check the alarm history log, press the Alarm Log window. The error window will appear (Figure 35).

Note: *The alarm records are only updated. They can't be deleted. The lines show the date and time of the alarm, and the code to describe the reason for the alarm.*

The controller can save a maximum of 100 records. When over 100 alarms have been recorded, the next number is overlaid by the new alarm.

Press the Back arrow to return to the main window.

When the Controller Alarms

When the controller alarms, the controller is forced to enter the Alarm window. The Alarm button appears in the bottom. Press the Turn Off Button (Figure 36) to enter the Alarm Log window.

After the alarm code is checked, press the Back arrow to return to the main window.

An alarm icon will appear on the left of the stop button. Navigate to the log window directly by pressing the button. (Figure 37)

When an alarm occurs, the emitters are stopped, and the controller emits a beep.

Press the Reset button to turn off the beep and disable the alarm.

WARNING! *Power off before checking the controller and emitters.*

When any emitter's temperature is over 60°C, a warning screen pops up (Figure 38). It is a warning message only.

Press the Turn Off Button to close the warning screen. The warning will also automatically close when the emitter temperature returns to 60°C.

The emitter will automatically shut down if the maximum allowable temperature is reached.

Figure 35.
Error Window

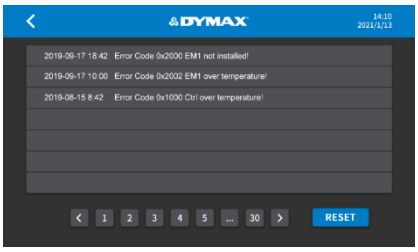

Figure 36.
Alarm Button

Figure 37.
Main Window with Alarm Button

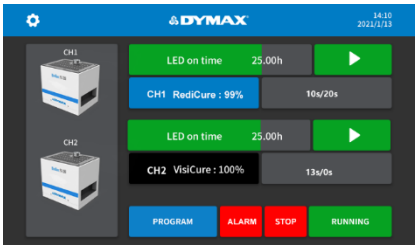

Figure 38.
High Temperature Warning Screen

Table 4.
Alarm Codes and Description

Alarm Code	ALARM message	Cause
0x1000	Ctrl Over Temperature (>50°C)	The controller temperature is too high.
0x2000	EM x (1,2) not installed	Emitter connection has problems after power up.
0x2001	EM x (1,2) fan error	Emitter fan has no speed.
0x2002	EM x (1,2) over temperature (> 69°C)	Emitter temperature is too high.
0x2003	EM x (1,2) over current	Emitter current is too high.
0x2004	EM x (1,2) zero output	Emitter has no current output.

PLC Mode

There are 2 working modes:

Program: This is the default mode and is operable by the touch screen. Parameters can be stored in the program slots and called for operation The parameters can be stored in the program slots and called for operation. This is the default mode for the touchscreen.

PLC: The system can be controlled by PLC. This mode is triggered by the PLC ENABLE input signal. Please follow the wiring guide in “PLC UV Control” on page 12.

Once the PLC mode is on, the PLC mode window (Figure 39) displays.

Figure 39.
PLC Mode Window

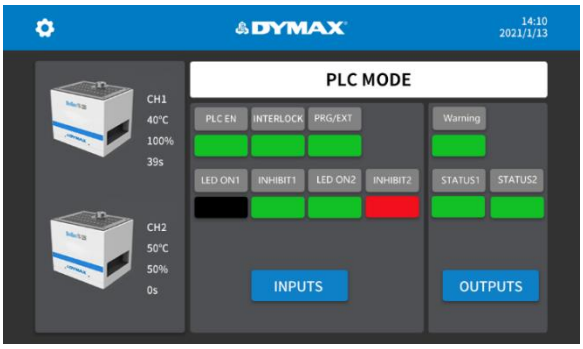

Table 5.
PLC Mode Signals

Signal Name / Description	Pin #	Signal Color	
		Asserted	De-Asserted
INPUTS			
INTERLOCK	11	GREEN	RED
PLC ENABLE	1	GREEN	RED
LED ON1	3, Emitter 1 ON	GREEN	BLACK
LED ON2	5, Emitter 2 ON	GREEN	BLACK
PRG/EXT	13	(EXT), GREEN	(PRG), RED
INHIBIT 1	7	GREEN	RED
INHIBIT 2	9	GREEN	RED
OUTPUTS			
WARNING	15	GREEN	RED
STATUS 1	17, EMITTER 1 STATE	GREEN	BLACK
STATUS 2	19, EMITTER 2 STATE	GREEN	BLACK
CHANNELS			
Emitter & Parameters		Each channel has an emitter. It displays the channel number, emitter temperature, power, and cure time. If no emitter is plugged in, the channel displays NA,0°C,0,0.	

Spare Parts & Accessories

Accessories

Item	Part Number
Personal Protection Equipment	
Protective Goggles — Green	35286
Protective Goggles — Gray (standard model included with unit)	84126
Face Shield	35186
Accessories	
Interconnect Cable, Type L & L — 2 m , 5 m	84025 , 84027
Interconnect Cable, Type I & L — 2 m , 5 m	84026 , 84028
Extension Cable, Type I & I – 5 m	84306
Extension Cable, Type I & L – 5 m	84307
Footswitch	84124
Radiometer	
ACCU-CAL™ 50-LED Radiometer	40505
Stands & Shields	
Mounting Stand	88844
Three-Sided Acrylic Shield	81016
Light Shield 360° shielding. Swing-up door and slide-out shelf. Not compatible with Dymax shutters.	88845

Components & Spare Parts

Item	Part Number
BlueWave FX 1250 Emitter RediCure (365 nm)	88801
BlueWave FX1250 Emitter PrimeCure (385 nm)	88802
BlueWave FX1250 Emitter VisiCure (405 nm)	88803
BlueWave FX1250 Controller 1CH (China Cord)	88805
BlueWave FX1250 Controller 2CH (China Cord)	88804
BlueWave FX1250 Controller 1CH (North America Cord)	88846
BlueWave FX1250 Controller 2CH (North America Cord)	88847
BlueWave FX1250 Controller 1CH (No Cord)	88850
BlueWave FX1250 Controller 2CH (No Cord)	88851
Power Cord, BlueWave FX-1250, 2M, China	84020
Power Cord, BlueWave FX-1250, 2M, North America	84061
Power Cord, BlueWave FX-1250, 2M, EU	84023
Power Cord, BlueWave FX-1250, 2M, UK	84024
Glass Replacement Kit	83015
PLC I/O Terminal Block (22 pin)	84062

Specifications

Property	Specification		
Emitter	RediCure	PrimeCure	VisiCure
Output Wavelength	365 nm	385 nm	405 nm
Irradiance Output at 25-mm Working Distance*	1.7 W/cm^2	2.1 W/cm^2	2.0 W/cm^2
Curing Area	5" x 5" [127 mm x 127 mm]		
Power Requirements	100-240 V~, 50/60 Hz | 1CH Controller: 850 W | 2CH Controller: 1700 W		
Cooling	Air cooled		
Dimensions (W x D x H)	1CH Controller: 15" x 12.6" x 6.5" [380 mm x 320 mm x 166 mm] 2CH Controller: 16.5" x 13.8" x 6.5" [420 mm x 350 mm x 166 mm] Emitter: 6.7" x 5.3" x 6" [170 mm x 134 mm x 152 mm]		
Weight	1CH Controller: 28.2 lb. [12.8 kg] 2CH Controller: 43.7 lb. [19.8 kg] Emitter: 8.8 lb. [4 kg]		
Unit Warranty	1 year from purchase date		
Operating Environment	10°C to 40°C (50°F to 104°F) 0 - 80% relative humidity, non-condensing (recommended: 30% RH) 2,000-meter max. altitude		
Shipping and Storage Conditions	Temperature: -20°C to +50°C Humidity: 10 - 80% RH, non-condensing Ship via standard ground, ocean, or air freight		
Certifications	RoHS, CE Marked, UKCA, EMC and Low Voltage		

* Measured using a Dymax ACCU-CAL™ 50-LED radiometer in flood mode at 25-mm working distance.

Figure 40.
Dimensions

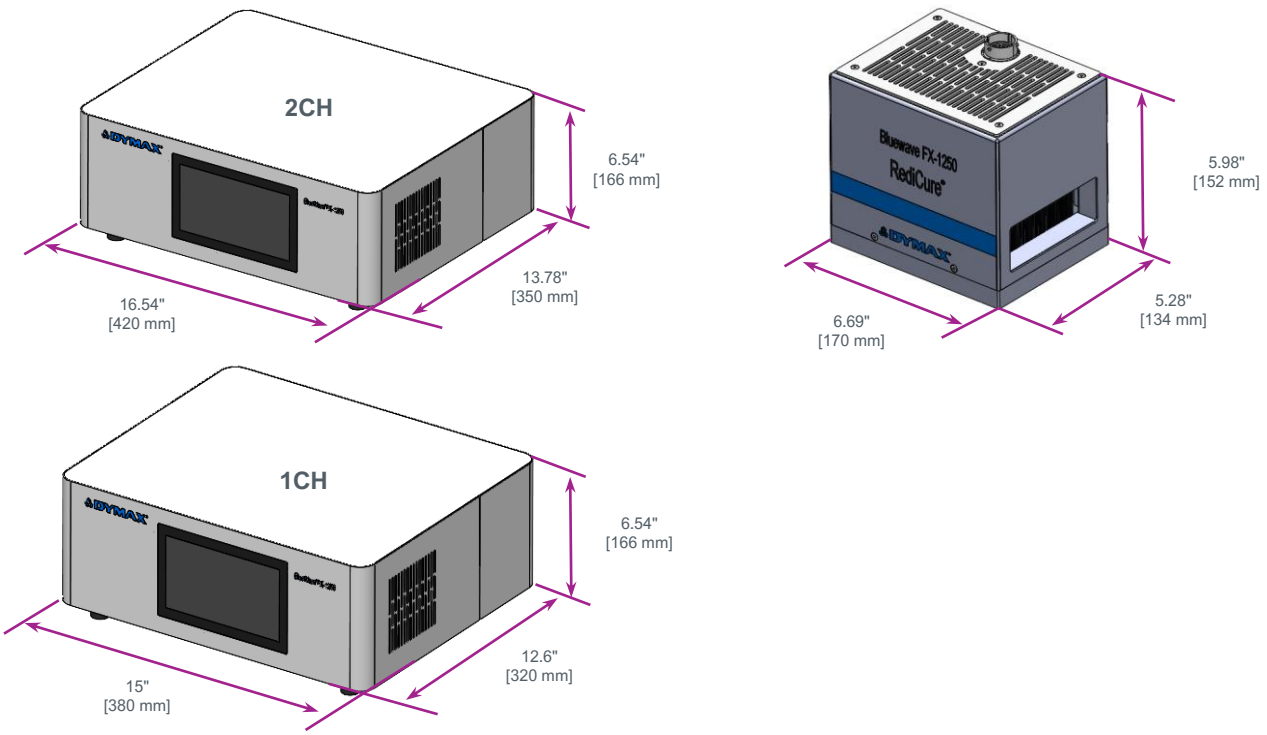

Figure 41.
Mounting Hole Locations and Size

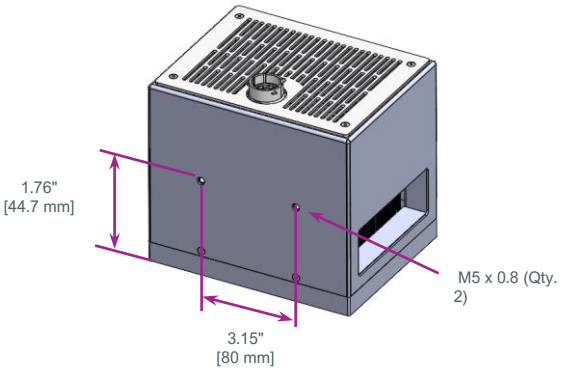

Figure 42.
Mounting Stand (PN 88844)

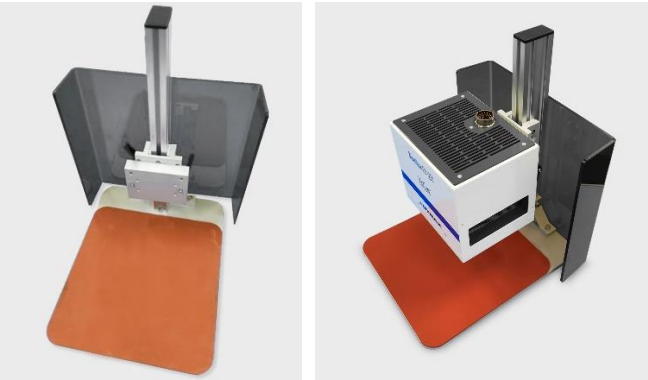

Mounting stands are sold separately. Emitters can be mounted on mounting stand with two M5 screws included with the mounting stand.

Table 6.
Operation Timing

Input Event	Out Event	Test Condition	Maximum Time Delay
LED ON/OFF Change to Low	UV LED ON	PLC Mode	20 ms
	LED STATE Output Change to LOW		25 ms
LED ON/OFF Change to High	UV LED OFF		30 ms
	LED STATE Output Change to High		40 ms
LED ON/OFF (Closed)	UV LED ON	Manual Mode	150 ms
	LED STATE Output Change to LOW		180 ms
LED ON/OFF (Open)	UV LED OFF		25 ms
	LED STATE Output Change to High		50 ms
LED ON/OFF Asserted (Change form Open to Closed)	UV LED ON	Timer Mode UV LED is OFF	140 ms
	LED STATE Output Change to Low		150 ms
	UV LED OFF	Timer Mode Before Timer Expired UV LED is ON	140 ms
	LED STATE Output Change to High		160 ms

Validation

Tests should be conducted prior to production to determine the time and light intensity required to fully cure your resin. The following approaches may be used to validate the curing process.

Set Exposure Time, Determine Intensity

Users can specify a cure time and, through empirical testing, determine the intensity required to achieve a full cure. As with any manufacturing process, it is advisable to incorporate a safety factor.

Set Intensity, Determine Exposure Time

Users can specify light intensity and, through empirical testing, determine the exposure time required to achieve a full cure. As with any manufacturing process, it is advisable to incorporate a safety factor.

***NOTE**: Dymax recommends intensities low at first to preserve LED life.*

Contact the Dymax Application Engineering Team for additional process support.

Control

Process validation confirms a minimum acceptable intensity. Users can then choose to operate at full intensity (using the excess intensity as an additional safety factor) or adjust the output to a specific intensity level. To ensure consistent and repeatable process results, intensity levels should be monitored with a radiometer. This enables users to identify light intensity changes and take corrective action (either adjusting the light intensity or performing maintenance).

Declaration of Conformity

Figure 43.

Declaration of Conformity - CE

DYMAX®

EU Declaration of Conformity

Manufacture:
Hanarey Chemicals (Shanghai) Co., Ltd.
No.111 Muhua Road, Fengxian District,
Shanghai, China 201507

Product description:	UV Flood Curing Device
Model name(s):	**BlueWave FX-1250 Controller 1CH/2CH** **BlueWave FX-1250 Emitter RediCure/ PrimeCure/ VisiCure** **BlueWave FX-1250 Interconnect cable I&L/ L&L**

This product complies with the following relevant Union Harmonization Legislation:

Electromagnetic Compatibility Directive (2014/30/EU):
EN 55011:2016+A1:2017+A11:2020
EN 61000-3-2:2014 Class A
EN 61000-3-3:2013
EN 61326-1:2013

Low Voltage Directive (2014/35/EU):
EN 61010-1:2010+A1:2019
EN 62471 :2008

RoHS Directive 2011/65 EU (incl. (EU) 2015/863)
EN IEC 63000:2018

Declaration:
This declaration of conformity is issued under the sole responsibility of the manufacturer.
Signed for and on behalf of Hanarey Chemicals (Shanghai) Co.,Ltd

2021.11.3 Shanghai

Name Date Location

CE

Authorized Signatory:
Kyle Zhu
Senior Manager, Equipment Development
Hanarey Chemicals (Shanghai) Co., Ltd.

DYMAX®
www.dymax.com

North America: +1 860.482.1010 | Europe: +49 611.962.7900 | Asia: +65.67522887

© 2021-2022 Dymax Corporation. All rights reserved. All trademarks in this guide, except where noted, are the property of, or used under license by Dymax Corporation, U.S.A.

Please note that most dispensing and curing system applications are unique. Dymax does not warrant the fitness of the product for the intended application. Any warranty applicable to the product, its application and use is strictly limited to that contained in Dymax's standard Conditions of Sale. Dymax recommends that any intended application be evaluated and tested by the user to ensure that desired performance criteria are satisfied. Dymax is willing to assist users in their performance testing and evaluation by offering equipment trial rental and leasing programs to assist in such testing and evaluations. Data sheets are available for valve controllers or pressure pots upon request.

Figure 44.

Declaration of Conformity – UK CA

DYMAX®

UK Declaration of Conformity

Manufacture:
Hanarey Chemicals (Shanghai) Co., Ltd.
No.111 Muhua Road, Fengxian District,
Shanghai, China 201507

Product description: UV Flood Curing Device
Model name(s): **BlueWave FX-1250 Controller 1CH/2CH**
BlueWave FX-1250 Emitter RediCure/ PrimeCure/ VisiCure
BlueWave FX-1250 Interconnect cable I&L/ L&L

This product complies with the following relevant UK Legislation:

Electromagnetic Compatibility Regulation 2016:
EN 55011:2016+A1:2017+A11:2020
EN 61000-3-2:2014 Class A
EN 61000-3-3:2013
EN 61326-1:2013

Electrical Equipment (Safety) Regulations 2016:
EN 61010-1:2010+A1:2019
EN 62471 :2008

The Restriction of the Use of Certain Hazardous Substances in Electrical and Electronic Equipment Regulation 2012
EN IEC 63000:2018

Declaration:
This declaration of conformity is issued under the sole responsibility of the manufacturer.
Signed for and on behalf of Hanarey Chemicals (Shanghai) Co.,Ltd

Name 2021.11.3 Date Location

UK CA

Authorized Signatory:
Kyle Zhu
Senior Manager, Equipment Development
Hanarey Chemicals (Shanghai) Co., Ltd.

DYMAX®
www.dymax.com

North America: +1 860.482.1010 | Europe: +49 611.962.7900 | Asia: +65.67522887

© 2021-2022 Dymax Corporation. All rights reserved. All trademarks in this guide, except where noted, are the property of, or used under license by Dymax Corporation, U.S.A.

Please note that most dispensing and curing system applications are unique. Dymax does not warrant the fitness of the product for the intended application. Any warranty applicable to the product, its application and use is strictly limited to that contained in Dymax's standard Conditions of Sale. Dymax recommends that any intended application be evaluated and tested by the user to ensure that desired performance criteria are satisfied. Dymax is willing to assist users in their performance testing and evaluation by offering equipment trial rental and leasing programs to assist in such testing and evaluations. Data sheets are available for valve controllers or pressure pots upon request.

Warranty

From date of purchase, Dymax Corporation offers a one-year warranty against defects in material and workmanship on all system components with proof of purchase and purchase date. Unauthorized repair, modification, or improper use of equipment may void your warranty benefits. The use of aftermarket replacement parts not supplied or approved by Dymax Corporation, will void any effective warranties and may result in damage to the equipment.

IMPORTANT NOTE: *DYMAX CORPORATION RESERVES THE RIGHT TO INVALIDATE ANY WARRANTIES, EXPRESSED OR IMPLIED, DUE TO ANY REPAIRS PERFORMED OR ATTEMPTED ON DYMAX EQUIPMENT WITHOUT WRITTEN AUTHORIZATION FROM DYMAX. THOSE CORRECTIVE ACTIONS LISTED ABOVE ARE LIMITED TO THIS AUTHORIZATION*

Index

Accessories, 21

Assembly, 8

Connections
- I/O Interface Summary, 11
- PLC UV Control, 12
- Status Output, 13

Contact Information, 4

Dimensions, 22

Help, 4

Main Components, 6

Parts Included, 7

PLC Mode, 20

Product Overview, 5

Safety, 4

Settings, 17
- Brightness, 18
- Clock and Calendar, 18
- Emitter's LED On Time, 18
- Password, 18
- System Log, 19
- System Reset, 18

Spare Parts, 21

Specifications, 22

Support, 4

System Assembly
- Connections, 10
- System Cooling, 8
- Wiring and Connections, 9

Unpacking, 7

Validation, 24
- Control, 24

Warranty, 27

Manufacturer

Hanarey Chemicals (Shanghai) Co., Ltd.

No.111 Muhua Road,
Fengxian District,
Shanghai, China 201507

Sales Representatives

North America:	Europe:	United Kingdom:	Asia & Pacific:
Dymax Corporation 318 Industrial Lane Torrington, CT 06790, USA	Dymax Europe GmbH Kasteler Str. 45 Geb. G359 Wiesbaden, Germany 65203	Kelvin Westscott 1b Hunts Grove Drive, Hardwick, Gloucester, Gloucestershire, GL2 4BH United Kingdom	Dymax Asia Pacific Pte Ltd Block 5008, Ang Mo Kio Ave 5, #05-03, Techplace || Singapore 569874

Note:

Hanarey global sales representatives also take the obligations of importers.

© 2022-2025 Dymax Corporation. All rights reserved. All trademarks in this guide, except where noted, are the property of, or used under license by Dymax Corporation, U.S.A.

Please note that most curing system applications are unique. Dymax does not warrant the fitness of the product for the intended application. Any warranty applicable to the product, its application and use is strictly limited to that contained in Dymax standard Conditions of Sale published on our website. Dymax recommends that any intended application be evaluated and tested by the user to ensure that desired performance criteria are satisfied. Dymax is willing to assist users in their performance testing and evaluation by offering equipment trial rental and leasing programs to assist in such testing and evaluations.