BERNHARDT | design

blueprint systems

price list

august 2026

index 2
laminates 3
veneer selections 4
design selections + powder coat selections 5
collection overview 6-11
power overview 12-14

frame base

- freestanding tables 15-23
- starter tables 24-30
- stepped tables 31-34
- endrun tables 35-43

block base

- freestanding tables 44-49
- starter tables 50-55
- stepped tables 56-59
- endrun tables 60-67

wall mount

- frame base with wall connection 68-70
- block base with wall connection 71-73

mediawall

- single-sided mediawall 74-76
- double-sided mediawall 77-79
- frame base with run-off tables 80-82
- block base with run-off tables 83-85

power

- under mount 86-89
- surface mount power module 90-92
- round surface power module 93
- **mediatrac1™**
  - power overview 94
  - 4-trac power system 95
  - grommet placement kits 96
  - veneer, laminate and solid surface grommet kits 97-103
  - management 104
  - exyton® APP modules 105-106

terms and conditions 107-108
guaranteed freight 109
guaranteed freight - canada 110

SCS Indoor Advantage™ Gold and LEVEL® 2 certified. See terms and conditions for additional environmental information.

Laminate Selections

A three character sku identifies each laminate selection as well as the standard finish offered. Individual components are priced with standard finish on standard laminate.

A variety of Wilsonart® standard laminates with standard finishes is offered on conference and multipurpose tables. Additional colors may be available but are subject to upcharges and extended lead times. The laminate option is available on components where noted as an option in the material specification code.

All laminate tops will have a 3mm matching edge band.

PLL Solid Laminate

Standard Solid

671 Designer White, Wilsonart D354-60 Matte Finish

672 Frosty White, Wilsonart 1573-60 Matte Finish

673 Fashion Grey, Wilsonart D381-60 Matte Finish

674 North Sea, Wilsonart D90-60 Matte Finish

675 Black, Wilsonart 1595-60 Matte Finish

20% Upcharge

665 Snow White Velvet, Wilsonart 15501-31 Traceless Laminate

666 Charcoal Velvet, Wilsonart 15504-31 Traceless Laminate

667 Black Velvet, Wilsonart 15505-31 Traceless Laminate

671 **672** **673** **674** **675** **665** 20% upcharge **666** 20% upcharge **667** 20% upcharge

WGL Woodgrain Laminate

Standard Woodgrain

684 Phantom Pearl, Wilsonart 8211K-28 Gloss Line Finish w/Aeon Scratch Resistant Protection

685 Raw Chestnut, Wilsonart 7975K-12 Soft Grain Finish w/Aeon Scratch Resistant Protection

686 High Line, Wilsonart 7970K-18 Linearity Finish w/Aeon Scratch Resistant Protection

678 New Age Oak, Wilsonart 7938-16 Casual Rustic Finish

679 Brazilwood, Wilsonart 7946-38 Matte Finish

687 Broadwalk Oak, Wilsonart 7983-38 Fine Velvet Finish

683 Portico Teak (Grey), Wilsonart 8210K-28 Gloss Line Finish

681 Studio Teak, Wilsonart 7960-16 Casual Rustic Finish

680 Walnut Heights, Wilsonart 7965K-12 Soft Grain Finish

682 Asian Night, Wilsonart 7949-16 Casual Rustic Finish

684 **685** **686** **678** **679** **687** **683** **681**

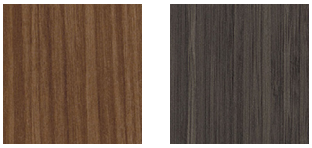

680 **682**

Veneer Selections

A three character sku identifies each species as well as the standard finish offered. Individual components are priced with standard finish. Special finishes on veneers made to customer specifications are subject to factory approval and a 10% net upcharge with a $500 net minimum.

Transparent stains and sealers are applied in multiple steps to enhance the beauty of the natural wood. A durable, baked-on, top-coat of conversion varnish or UV topcoat is applied to protect the product. It is recommended that felt, cork or fabric backed desk pads and accessories are used on worksurfaces to minimize wear.

When specifying light finishes the natural characteristics of the wood will be visible and color will vary. Paint finishes are available as custom orders. See terms and conditions for additional finish information.

OAK Oak
Rift Cut

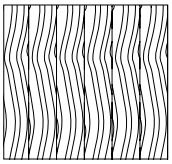

Standard Finish

871	870	839
837	860	861
865	836	866
872	805	845

OAK Select Finishes

M73	M72	M75
M74	M76	M77
M71		

WLT Walnut
Flat Cut

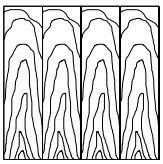

Standard Finish

872	861
870	823
860	866
839	

OAK Oak

871

837

865

872

870

860

836

805

839

861

866

845

OAK Select Finishes

M73 Whitewash

M74 Fawn

M71 Blonde

M72 Toast

M76 Caramel

M75 Smoke

M77 Coffee

WLT Walnut

872

870

860

839

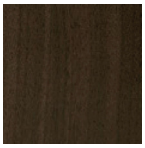
861

823

866

Design Selections

Edge Style Selection

FL Flat Edge

Top Corner Selection

SQ Square Corner

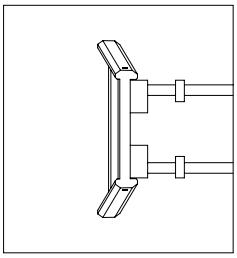

RR Round Corner
3½'' Radius - $150 upcharge

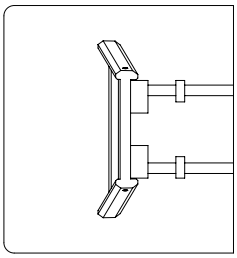

Powder Coat Finishes - **Upcharges apply.**

WH Satin White

GR Graphite

BZ Bronze

IG Iron Grey

RD Black Red

BK Matte Black

Optional Powder Coat Colors - RAL

- Lead Time - Three weeks additional lead-time after color approval
- Net Up-charge - $1000 for colors shown in Bernhardt Design RAL Powder Coat Selector
- Minimum Order Quantity - None
- Approval Sample Cost - None
- Combining Products - One up-charge is applicable for multiple products on a single purchase order when they are in the same color

Blueprint Table Collection

Designed for open environments, the Blueprint table collection meets a multitude of meeting table needs and expands Bernhardt Design's table offering.The collection features a large number of skus and multiple configurations that include standalone tables, media walls, and stepped tables. Blueprint offers two base options: Frame, and Block. SCS Indoor Advantage™ Gold and LEVEL® 2 certified. See terms and conditions for additional environmental information.

Conference Height Round Table - Ranging from 42" - 72" diameter

Conference Height Table - Ranging from 24" - 48" wide by 48" - 120" long

Conference Height Table - Ranging from 36" - 48" wide by 72" - 120" long

Block and Frame Stepped Table - Ranging from 36" - 48" wide up to 240" long

2 Piece Frame Table Run - Ranging from 36" - 48" wide up to 240" long

Block Stepped Table - Ranging from 24" - 48" wide up to 240" long

Blueprint Base Offerings

Frame Base

The frame base is constructed of solid oak with subtle bevel details. Configuration options include standalone tables, stepped runs and multiple configurations offered in 30", 36" and 42" base height.

Top Overhang Summary for End Conditions

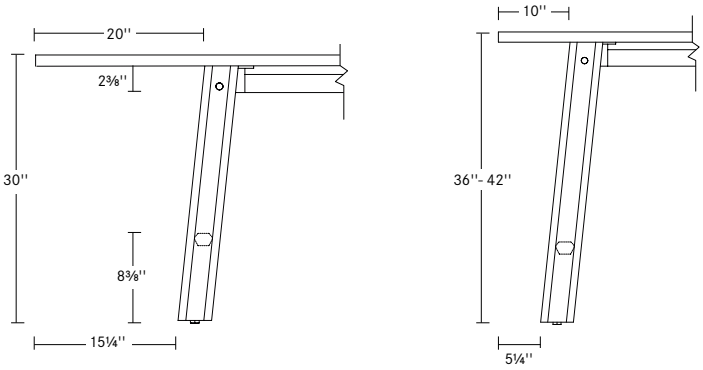

10'' top overhang is standard for tops 54'' to 90'' lengths.
20'' top overhang is standard for freestanding tops and those longer than 90''.
20'' top overhang is standard for all 30''h tables.

Frame Base Size

The following illustrations show the overall frame leg dimensions.

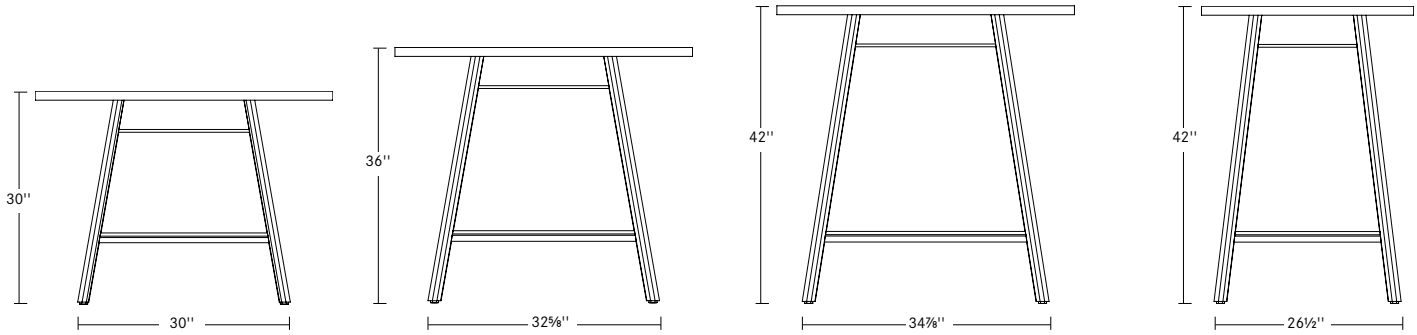

30''h Frame Base
For use with 36'', 42'' and 48'' tops

36''h Frame Base
For use with 36'', 42'' and 48'' tops

42''h Frame Base
For use with 36'' and 42''tops

42''h Frame Narrow Base
For use with 24'' and 30'' tops only.

Wire Management

The following illustration shows the wire management for the Frame table. A gray & white braided cotton cord (shown below in red) will be exposed and managed by clear polycarbonate clips down the leg. Cords will be routed by the wire management clips mounted on the bottom and

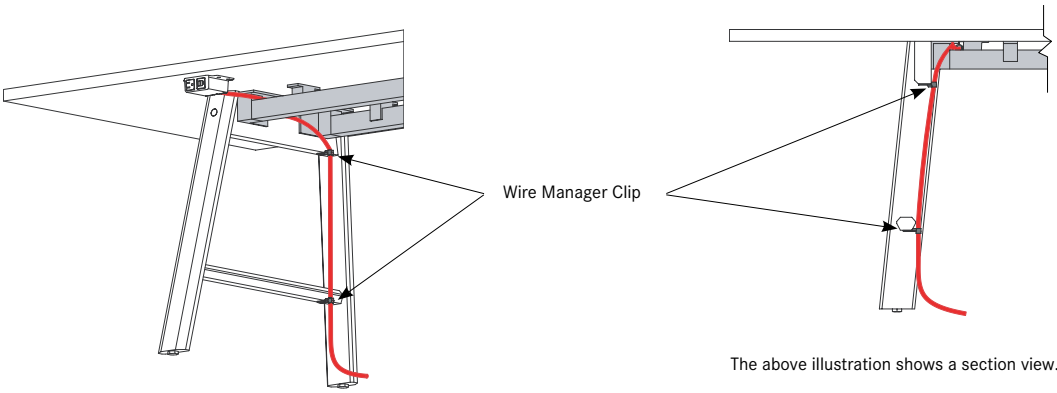

The above illustration shows a section view.

Blueprint Base Offerings

Block Base

The Block base provides a traditional panel look with concealed wire management and features a unique beveled edge detail on the inside. Configuration options include standalone tables, stepped runs and multiple configurations offered in 30", 36" and 42" base height.

Top Overhang Summary for Block Base

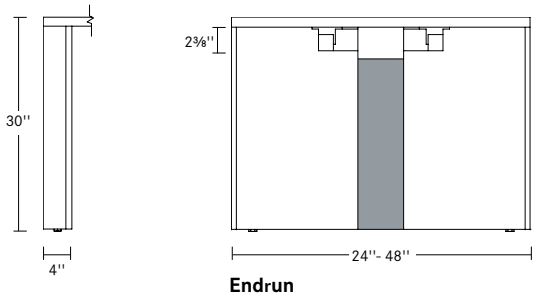

Endrun

Endrun base to be flush with top edges.
Removable panel to route wires

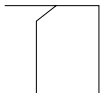

Endrun block showing
bevel detail

Block Base Size

The following illustrations show the overall block leg dimensions.

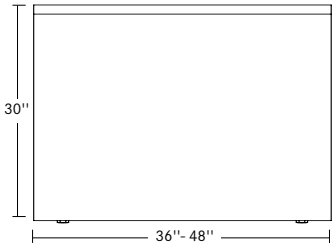

30''h Block Base
For use with 36'', 42'' and 48'' tops

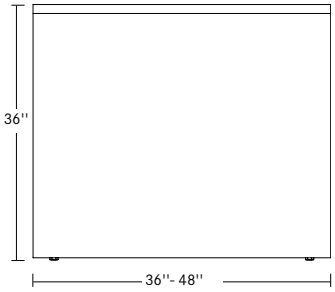

36''h Block Base
For use with 36'', 42'' and 48'' tops

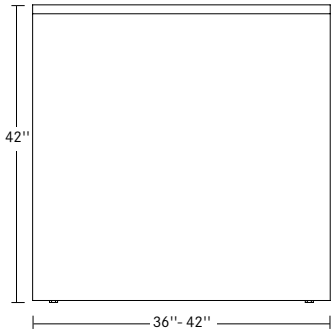

42''h Block Base
For use with 36'' and 42''tops

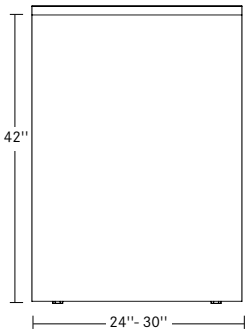

30"h - 42''h Block Narrow Base
For use with 24'' and 30'' tops only.

Wire Management

The following illustration shows the wire management for the Block table. A gray & white braided cotton cord (shown below in red) will be routed behind the concealed, removable panel.

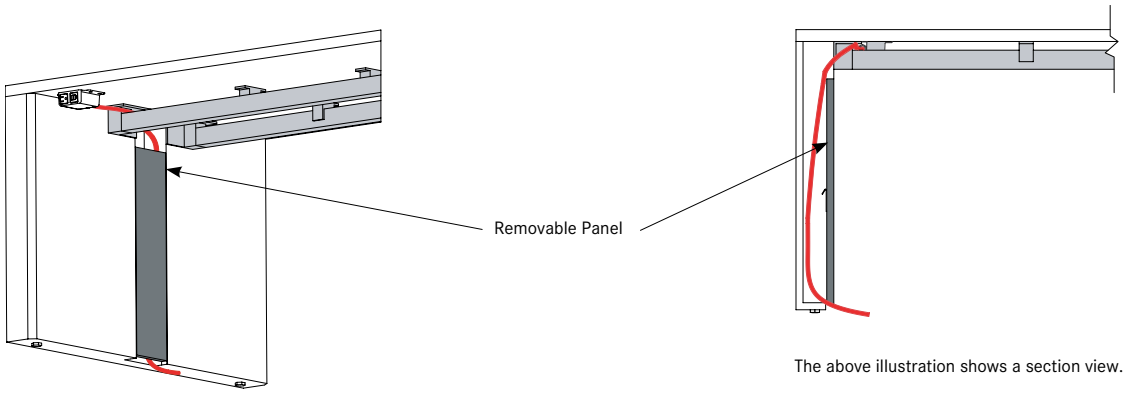

The above illustration shows a section view.

In-Line Conditions

Frame Table

Blueprint is designed for open environments and offers various in-line configurations. Blueprint structural rails are designed to accommodate long table runs.

Frame runs are unique with the ability to adapt to both block and frame legs in long runs.

Frame with Block Run

Block Run

Specifying In-Line Configurations

Blueprint tables are unique in how they are skued. Please see below illustration on how to specify in-line tables.

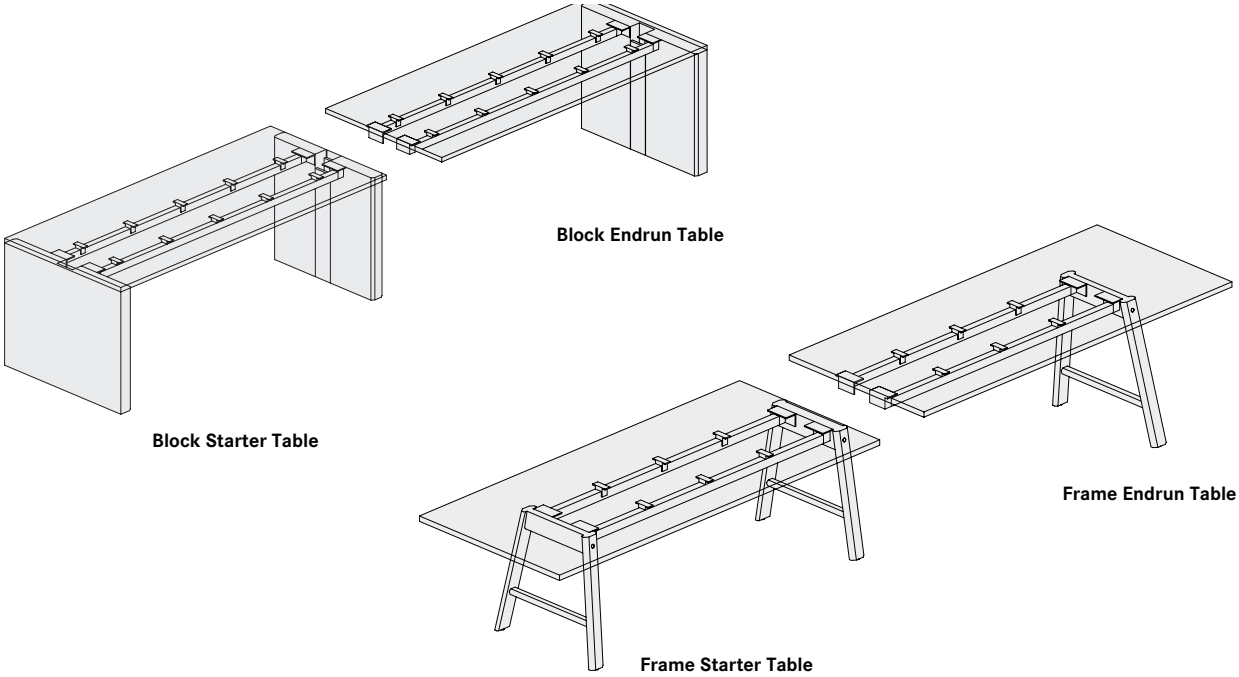

Blueprint Stepped Conditions

Frame Stepped Configuration

Frame Block Stepped Configuration

Stepped Overview

Blueprint is designed for open environments and offers various stepped configurations. The Frame legs provide a lighter look, yet with the mass and disposition to hold their own in any space. The Block leg presents a classic aesthetic with a modern case.

The multi-level design provides the opportunity for interesting landscaping layouts that can accommodate both high and low seating.

Block Stepped Configuration

Specifying Stepped Configurations

Blueprint tables are unique in how they are skued. Please see below illustration on how to specify stepped tables.

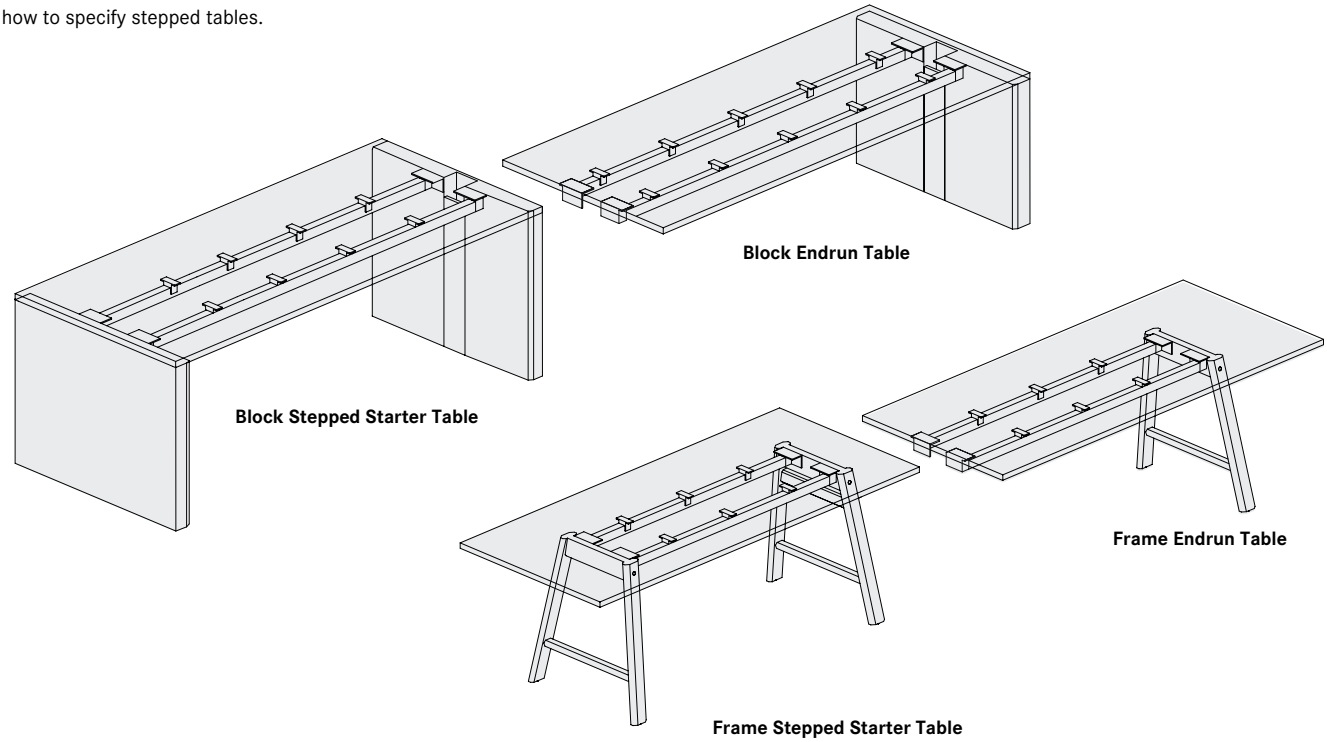

Blueprint Mediawall

Mediawalls are designed for installation against a wall or as freestanding units with single or double-sided tables. The bold design elements compliment the open frame legs and block base, while also helping ground the table collection.

Blueprint mediawalls help build a functional meeting space in open environments and offer a location for customer's to mount various monitors and/or marker boards. Blueprint tables utilize structural rails, incorporating new wire management and multiple power options that work together to create a collaborative workspace for open environments. The mediawall wire management incorporates a removable panel to route cords from the rails down the inside of the panel.

Double-Sided Mediawall

Single-Sided Mediawall Configuration with Lounge

Mediawall Features

Mediawalls offer (2) Sku's; door/trash and open door with general storage.

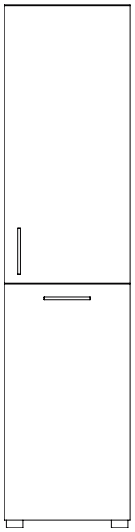

Door / Trash

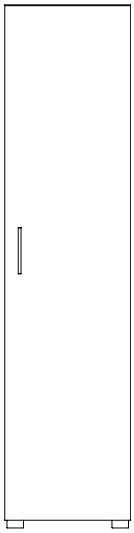

Door

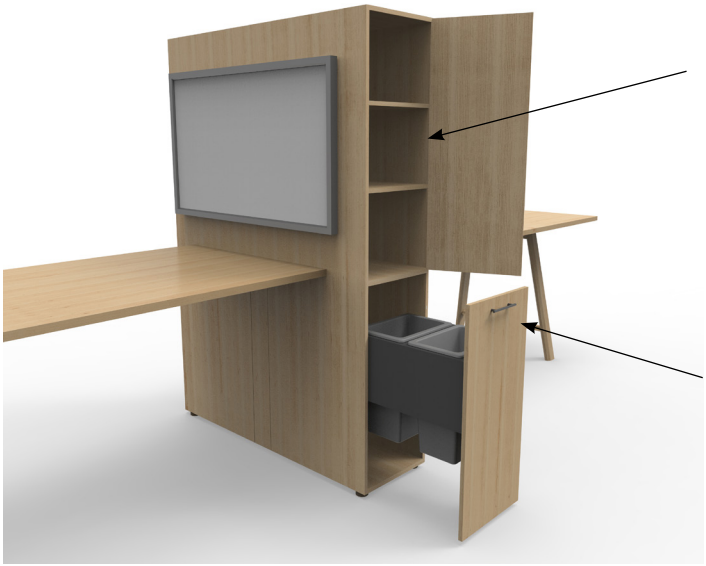

Under Mount Power

Bernhardt Design offers a proprietary under mount power solution allowing quick and easy daisy chaining of modules together. A maximum of (7) under mount power modules can be connected on one power infeed.

The under mount power modules are available in (2) configurations: (2) receptacles, or (1) receptacle, (1) 2 amp USB-A port and (1) 2 amp USB-C port. Each module in a kit will be provided with the same configuration as specified by the end user.

End user installation will be required per individual SKU. Each SKU includes a separate power infeed with a 10' grounded plug to connect to the power source. See installation instructions for installing.

Under mount power is certified to UL STD 962 A CSA STD 22.2 No. 21.

Note: End user installation will be required per individual SKU.

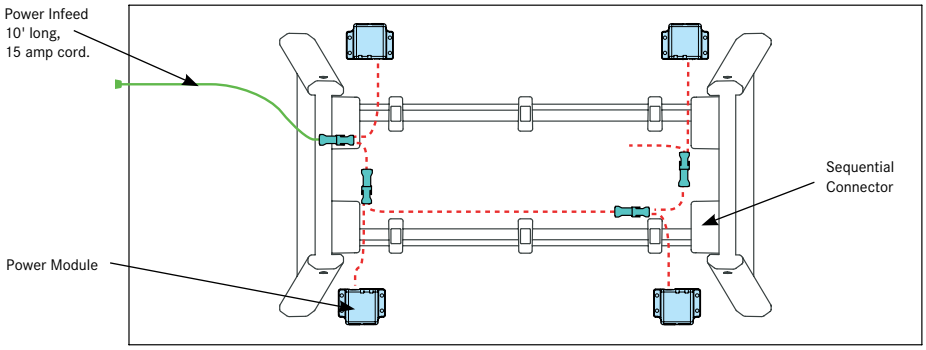

Bernhardt Design provides recommendations for installation locations as shown on pages 87-89. Installation instructions are included with each power unit. Power is specified separately and installed in the field.

Power Modules
Matte Black Finish

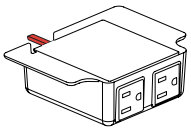

power + power
(2) 120 v 60 Hz. 15 amp receptacles
braided cotton 10' cord
grounded plug
UL 962 listed

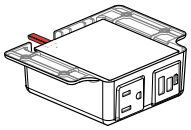

power + usb-a + usb-c
(1) 120 v 60 Hz. 15 amp receptacle
(1) 2 amp USB-A port, 10 watt
(1) 2 amp USB-C port, 20 watt
braided cotton 10' cord
grounded plug
UL 962 listed

Replacement Housing
with Location for Mini AAP

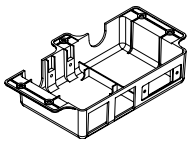

Sequential Connector
Matte Black Finish

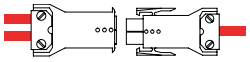

Power Infeed
10' Grounded Plug
Required per individual SKU
Braided Cord

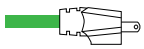

15 amp

Blueprint Wire Management

Blueprint power infeeds are routed through integral spacers to a multi-wire clip that offers advanced wire management.
The following illustration shows a section view of the Blueprint table with under mount power.

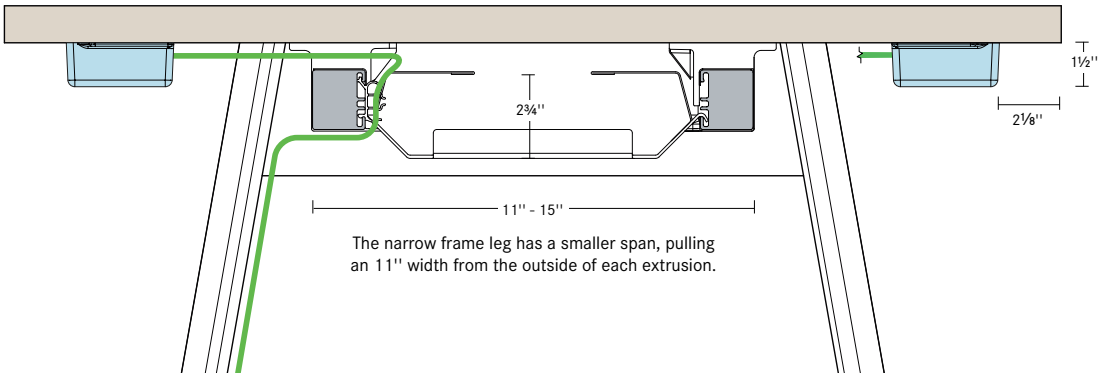

The multi-wire clip presents a wire management solution that offers space for (2) thicker power cords and an area for ethernet cords and smaller cords in the center. This system for wire management provides a cleaner and more simplified look by containing wires up against the extrusion.

Surface Mount Power Module

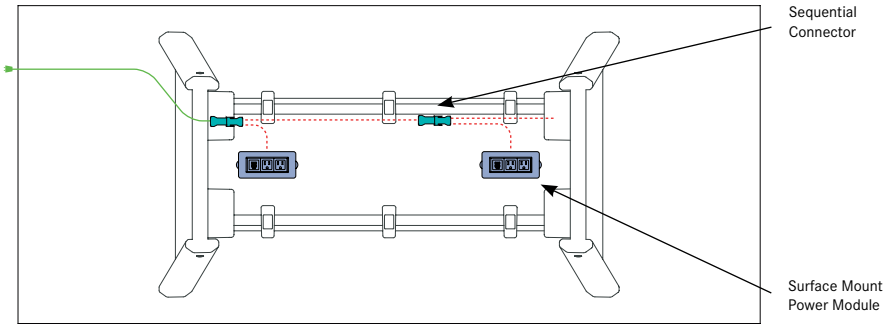

Blueprint offers a proprietary surface mount power solution allowing quick and easy daisy chaining of tables. A maximum of (3) surface mount power modules can be connected on a single power infeed.

The surface mount power module is availble in one configuration with (2) grounded receptacles and (1) 2 amp USB-A port and (1) 2 amp USB-C port.

Each SKU includes a separate power infeed with a 10’ grounded plug to connect to the power source. If specified as a single module, the unit will have a 10' infeed with a grounded plug rather than a sequential connector.

Surface mount power is certified to UL STD 962 A CSA STD 22.2 No. 21.

Note: End user installation will be required per individual SKU. Power specified separately. See pages 91-93 for grommet codes.

Power Module
Black, Silver or White Finish

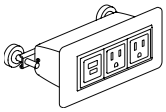

(2) 120 v 60 Hz. 15 amp receptacles
(1) 2 amp USB-A port, 10 watt
(1) 2 amp USB-C port, 20 watt
6½"w x 3"d x 2¾"h

Sequntial Connector
Matte Black Finish

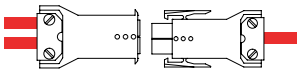

Power Infeed
10' Grounded Plug
Required per individual SKU

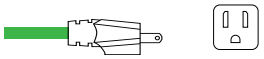

15 amp

Round Surface Power Module

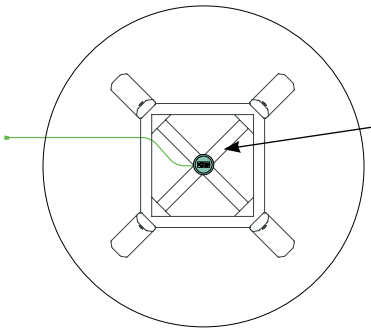

Note: Power Module will come pre-installed. Power is specified separately.

Available only for the round and arched square tables, the Blueprint Power Module offers a simple and clean way of bringing power and USB to the worksurface.

The Power Module installs flush to the worksurface and is offerred in one configuration: (1) receptacle and (1) 2 amp USB-A port and (1) 2 amp USB-C port.

The power module is UL approved with spill-proof technology and a 15 amp 10' power infeed.

Power module power is certified to UL STD 962 A CSA STD 22.2 No. 21.

Power Module
Brushed Nickel, Matte Black, Matte White

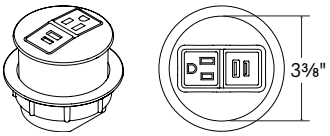

(1) 20 v 60 Hz. 15 amp receptacles
(1) 2 amp USB-A port, 10 watt
(1) 2 amp USB-C port, 20 watt
10' braided cotton cord
3⅜w" x 3⅜d" x2⅝h"

Power Infeed
10' Grounded Plug
Required per individual SKU

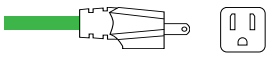

15 amp

Mediatrac 1™

Mediatrac 1 grommet system is a simplified for bringing power and data to the meeting table worksurface in a clean simple way.

Mediatrac 1 provides power and various options for Extron AAP data configurations. Grommets are available in (3) different sizes: a 8" x 4" single door unit, a 8" x 8" double door unit and a 8" x 24" double door unit. All units have brushed aluminum trim with options for aluminum, laminate, veneer, corian and glass lids.

Mediatrac 1 has 4 different options for bringing power to the table, corded, harded or 4-trac system with either a corded or hardwired power infeed.

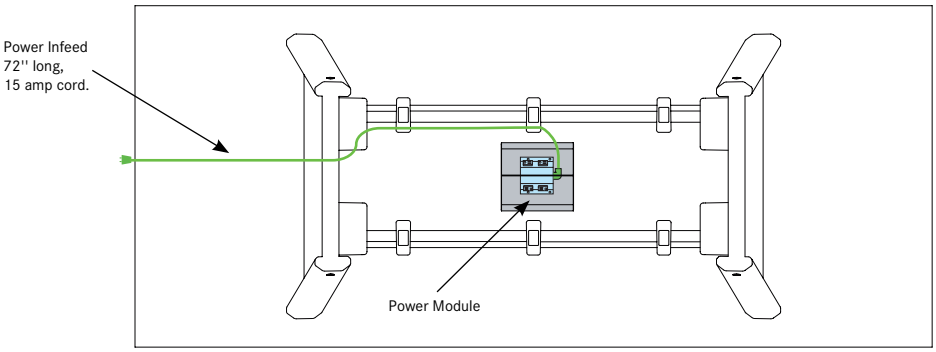

Note: End user installation will be required per individual SKU.
Power specified separately. See pages 98-103 for grommet kits.

Mediatrac 1 Options

8" Single Door Mediatrac™ Grommet

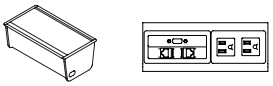

2 grounded outlets, 1 exit plug,
accepts 2 Extron single space AAP's,
AAP modules specified separately,
brushed aluminum frame

8" Double Door Mediatrac™ Grommet

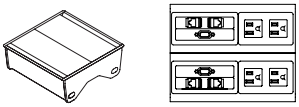

4 grounded outlets, 1 exit plug,
accepts 4 Extron single space AAP's,
AAP modules specified separately,
brushed aluminum frame

24" Double Door Mediatrac™ Grommet

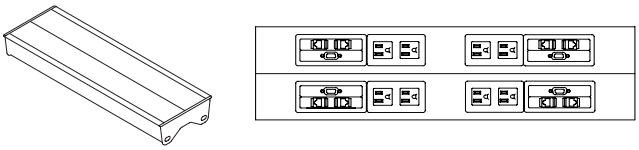

8 grounded outlets, 2 exit plugs,
accepts 8 Extron single space AAP's,
AAP modules specified separately,
brushed aluminum frame

Mediatrac 1 Grommet Kits (Includes the following)

Power Module

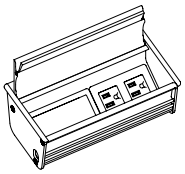

Number and configuration
of grommet modules determined
by the grommet code

Jumper (if required)

Jumper are determined by the
length of the top specified

Connector + H-Block

Will be included in kit when
the 4-trac option is specified

Power Infeed Options

72" 4-Trac Power Infeed with 20 amp plug

72" 4-Trac Power Infeed with Hardwired

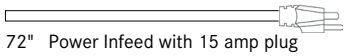

72" Power Infeed with 15 amp plug

72" ⅜" Hardwire Whip

15 amp

20 amp receptacle, 4-Trac Only

Wire Management

brushed nickel finish
flexible cable management
weighted metal base

Mediatrac 1 Dimensional Specifications

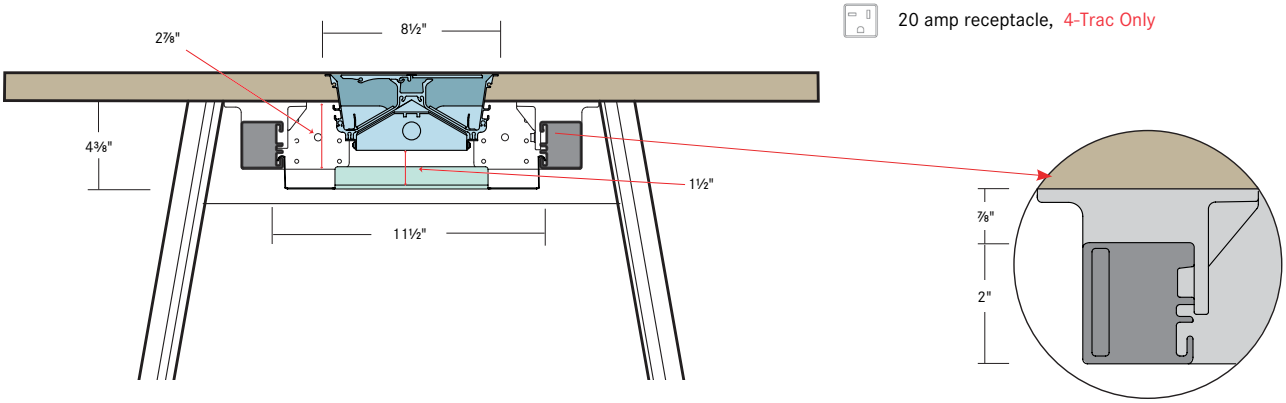

Detail of Mediatrac 1 Rail

The narrow frame leg has a smaller span, pulling an 11'' width from the outside of each extrusion.

Mediatrac 1 is certified to UL STD 962A, UL STD 1363, CSA STD 22.2 No. 308-14. 4-Trac is certified to UL STD 183 CSA STD 22.2 No. 203.1-14.

30''h frame freestanding table

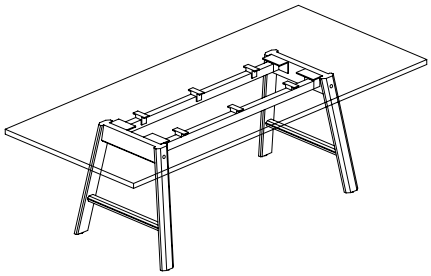

frame base

- 20''w overhang on short ends for all 30''h tables

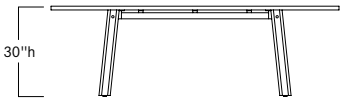

	sku	w	d	h	PLL solid WGL woodgrain	OAK oak WLT walnut
36"d tables	AGA	72	36	30	5532	7006
	AHA	78	36	30	5687	7114
	AIA	84	36	30	6221	7741
	AJA	90	36	30	6650	8321
	AKA	96	36	30	6848	8467
	ALA	102	36	30	7528	9111
	AMA	108	36	30	7730	9267
	ANA	114	36	30	7928	9424
	AOA	120	36	30	8128	9583
42"d tables	AGB	72	42	30	5616	7090
	AHB	78	42	30	5775	7198
	AIB	84	42	30	6308	7824
	AJB	90	42	30	6993	8664
	AKB	96	42	30	7191	8807
	ALB	102	42	30	7871	9453
	AMB	108	42	30	8072	9607
	ANB	114	42	30	8268	9764
	AOB	120	42	30	8469	9924
48"d tables	AGC	72	48	30	5703	7174
	AHC	78	48	30	5857	7284
	AIC	84	48	30	6396	7911
	AJC	90	48	30	7077	8747
	AKC	96	48	30	7274	8892
	ALC	102	48	30	7956	9535
	AMC	108	48	30	8156	9693
	ANC	114	48	30	8355	9848
	AOC	120	48	30	8556	10007

specification codes example: BPS-SKU-AASQ000

series	sku	base	corner	power
blueprint B P S -	-	AA frame A A	SQ square RR 3½'' radius **upcharge $150**	surface mount - pgs 90-92 mediatrac1 - pgs 94-106 000 none or undermount - pgs 86 - 89

material/finish code example: PLL 805 OAK 805

base material	base finish	top material	top finish
OAK oak WLT walnut	see page 4	PLL solid laminate WGL woodgrain laminate OAK oak WLT walnut	see pages 3-4

36''h frame freestanding table

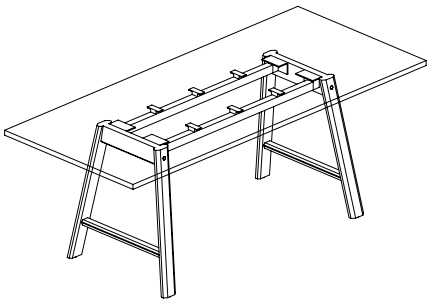

frame base

- 60''w - 90''w has a 10'' overhang, 96''w - 120''w has a 20'' overhang

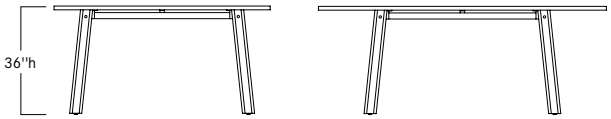

Frame table with10'' overhang

Frame table with 20'' overhang

	sku	w	d	h	PLL solid WGL woodgrain	OAK oak WLT walnut
36"d tables	BEA	60	36	36	5564	7101
	BFA	66	36	36	5722	7218
	BGA	72	36	36	5873	7346
	BHA	78	36	36	6029	7456
	BIA	84	36	36	6565	8082
	BJA	90	36	36	6993	8664
	BKA	96	36	36	7191	8809
	BLA	102	36	36	7871	9452
	BMA	108	36	36	8072	9607
	BNA	114	36	36	8268	9764
	BOA	120	36	36	8469	9921
42"d tables	BEB	60	42	36	5649	7183
	BFB	66	42	36	5805	7303
	BGB	72	42	36	5958	7431
	BHB	78	42	36	6111	7542
	BIB	84	42	36	6649	8167
	BJB	90	42	36	7332	9002
	BKB	96	42	36	7529	9147
	BLB	102	42	36	8210	9792
	BMB	108	42	36	8413	9948
	BNB	114	42	36	8610	10106
	BOB	120	42	36	8812	10263
48"d tables	BFC	66	48	36	5890	7391
	BGC	72	48	36	6041	7515
	BHC	78	48	36	6200	7625
	BIC	84	48	36	6736	8253
	BJC	90	48	36	7418	9089
	BKC	96	48	36	7616	9234
	BLC	102	48	36	8295	9877
	BMC	108	48	36	8496	10034
	BNC	114	48	36	8693	10192
	BOC	120	48	36	8895	10348

specification codes example: BPS-SKU-AASQ000

series	sku	base	corner	power
blueprint		AA frame	SQ square	surface mount - pgs 90-92
				mediatrac1 - pgs 94-106
			RR 3½'' radius	000 none or undermount - pgs 86 - 89
			upcharge $150	
B P S -	-	A A		

material/finish code example: PLL 805 OAK 805

base material	base finish	top material	top finish
OAK oak	see page 4	PLL solid laminate	see pages 3-4
WLT walnut		WGL woodgrain laminate	
		OAK oak	
		WLT walnut	

42''h frame freestanding table

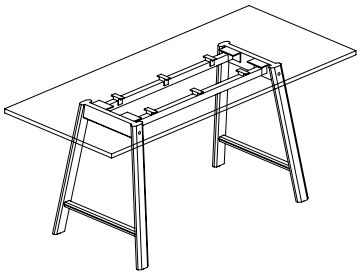

frame base

- 60''w - 90''w has a 10'' overhang, 96''w - 120''w has a 20'' overhang

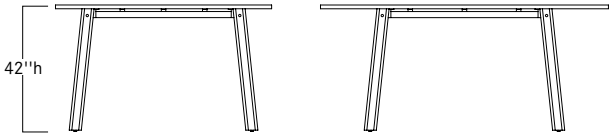

Frame table with10'' overhang

Frame table with 20'' overhang

	sku	w	d	h	PLL solid WGL woodgrain	OAK oak WLT walnut
36"d tables	CEA	60	36	42	5738	7270
	CFA	66	36	42	5891	7391
	CGA	72	36	42	6041	7515
	CHA	78	36	42	6200	7625
	CIA	84	36	42	6736	8253
	CJA	90	36	42	7162	8834
	CKA	96	36	42	7361	8977
	CLA	102	36	42	8040	9622
	CMA	108	36	42	8242	9778
	CNA	114	36	42	8439	9935
	COA	120	36	42	8640	10091
42"d tables	CEB	60	42	42	5819	7358
	CFB	66	42	42	5976	7474
	CGB	72	42	42	6128	7601
	CHB	78	42	42	6286	7711
	CIB	84	42	42	6819	8338
	CJB	90	42	42	7504	9174
	CKB	96	42	42	7701	9319
	CLB	102	42	42	8381	9963
	CMB	108	42	42	8581	10117
	CNB	114	42	42	8780	10277
	COB	120	42	42	8982	10435

specification codes example: BPS-SKU-AASQ000

series	sku	base	corner	power
blueprint		AA frame	SQ square	surface mount - pgs 90-92
				mediatrac1 - pgs 94-106
			RR 3½'' radius	000 none or undermount - pgs 86 - 89
			upcharge $150	
B P S -	-	A A		

material/finish code example: PLL 805 OAK 805

base material	base finish	top material	top finish
OAK oak	see page 4	PLL solid laminate	see pages 3-4
WLT walnut		WGL woodgrain laminate	
		OAK oak	
		WLT walnut	

42''h narrow frame freestanding table

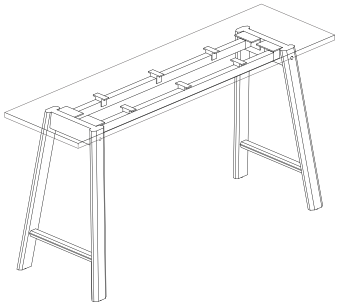

narrow frame base

- 60''w - 90''w has a 10'' overhang, 96''w - 120''w has a 20'' overhang

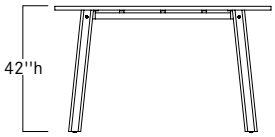

Frame table with10'' overhang

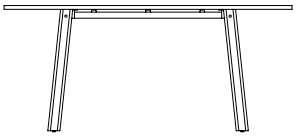

Frame table with 20'' overhang

	sku	w	d	h	**PLL** solid **WGL** woodgrain	**OAK** oak **WLT** walnut
24"d tables	CEV	60	24	42	5393	6925
	CFV	66	24	42	5552	7049
	CGV	72	24	42	5703	7174
	CHV	78	24	42	5857	7455
	CIV	84	24	42	6396	7911
	CJV	90	24	42	6650	8321
	CKV	96	24	42	6848	8467
	CLV	102	24	42	7528	9111
	CMV	108	24	42	7730	9267
	CNV	114	24	42	7928	9424
	COV	120	24	42	8128	9583
30"d tables	CE0	60	30	42	5479	7013
	CF0	66	30	42	5636	7132
	CG0	72	30	42	5790	7261
	CH0	78	30	42	5944	7367
	CI0	84	30	42	6480	7998
	CJ0	90	30	42	6820	8492
	CK0	96	30	42	7019	8636
	CL0	102	30	42	7700	9281
	CM0	108	30	42	7901	9436
	CN0	114	30	42	8099	9594
	CO0	120	30	42	8301	9752

specification codes example: BPS-SKU-AASQ000

series	sku	base	corner	power
blueprint B P S -	-	AA frame A A	SQ square RR 3½'' radius **upcharge $150**	surface mount - pgs 90-92 000 none or undermount - pgs 86 - 89

material/finish code example: PLL 805 OAK 805

base material	base finish	top material	top finish
OAK oak WLT walnut	see page 4	PLL solid laminate WGL woodgrain laminate OAK oak WLT walnut	see pages 3-4

30''h freestanding round table

round table

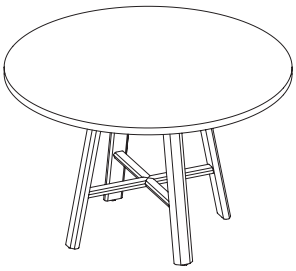

	sku	w	d	h	PLL solid WGL woodgrain	OAK oak WLT walnut
round table - sm	XBB	42	42	30	4126	5668
	XCC	48	48	30	4966	6124
	XDD	54	54	30	5348	6429
round table - lg	XEE	60	60	30	6287	7178
	XFF	66	66	30	7071	8010
	XGG	72	72	30	7412	8435

specification codes example: **BPS-SKU-AA000**

series	sku	base	power
blueprint		AA frame	surface mount - pgs 90-92 round surface mount - pg 93 mediatrac1 - pgs 94-106 000 none or undermount - pgs 86 - 89
B P S -	-	A A	

material/finish code example: **PLL 805 OAK 805**

base material	base finish	top material	top finish
OAK oak WLT walnut	see page 4	PLL solid laminate WGL woodgrain laminate OAK oak WLT walnut	see pages 3-4

30''h freestanding arched table

arched table

	sku	w	d	h	PLL solid WGL woodgrain	OAK oak WLT walnut
arched table - sm	YAA	36	36	30	3455	5274
	YBB	42	42	30	4298	5776
	YCC	48	48	30	5136	6272
arched table - lg	YDD	54	54	30	5519	6482
	YEE	60	60	30	5997	6920
	YFF	66	66	30	6437	7283

specification codes example: BPS-SKU-AA000

series	sku	base	power
blueprint		AA frame	surface mount - pgs 90-92 round surface mount - pg 93 mediatrac1 - pgs 94-106 000 none or undermount - pgs 86 - 89
B P S -	-	A A	

material/finish code example: PLL 805 OAK 805

base material	base finish	top material	top finish
OAK oak WLT walnut	see page 4	PLL solid laminate WGL woodgrain laminate OAK oak WLT walnut	see pages 3-4

30''h frame/block freestanding table

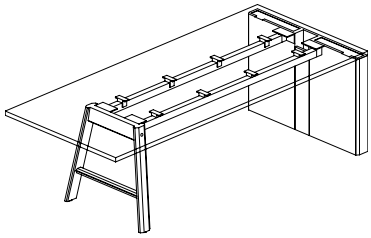

frame/block base

- 20'' overhang on frame base end of table
- block base is mounted flush to end of top

	sku	w	d	h	**PLL** solid **WGL** woodgrain	**OAK** oak **WLT** walnut
36"d tables 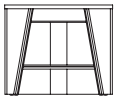	AGA	72	36	30	7578	9050
	AHA	78	36	30	7733	9160
	AIA	84	36	30	8268	9788
	AJA	90	36	30	8697	10366
	AKA	96	36	30	8894	10511
	ALA	102	36	30	9574	11154
	AMA	108	36	30	9777	11312
	ANA	114	36	30	9974	11470
	AOA	120	36	30	10176	11626
42"d tables 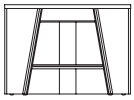	AGB	72	42	30	7748	9220
	AHB	78	42	30	7905	9328
	AIB	84	42	30	8439	9958
	AJB	90	42	30	9124	10794
	AKB	96	42	30	9321	10938
	ALB	102	42	30	10000	11582
	AMB	108	42	30	10202	11737
	ANB	114	42	30	10400	11895
	AOB	120	42	30	10600	12054
48"d tables 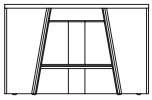	AGC	72	48	30	7919	9392
	AHC	78	48	30	8074	9501
	AIC	84	48	30	8610	10127
	AJC	90	48	30	9293	10964
	AKC	96	48	30	9491	11111
	ALC	102	48	30	10172	11753
	AMC	108	48	30	10373	11908
	ANC	114	48	30	10568	12068
	AOC	120	48	30	10769	12221

specification codes example: BPS-SKU-AASQ000

series	sku	base	corner	power
blueprint B P S -	-	AC frame A C	SQ square RR 3½'' radius **upcharge $150**	surface mount - pgs 90-92 mediatrac1 - pgs 94-106 000 none or undermount - pgs 86 - 89

material/finish code example: PLL 805 OAK 805

base material	base finish	top material	top finish
OAK oak WLT walnut	see page 4	PLL solid laminate WGL woodgrain laminate OAK oak WLT walnut	see pages 3-4

36''h frame/block freestanding table

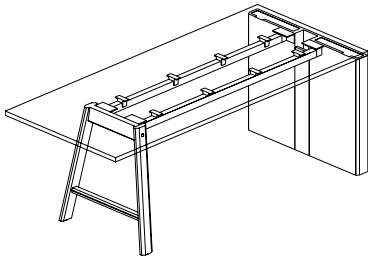

frame/block base

- 60''w-90''w has a 10'' overhang, 96''w-120''w has a 20'' overhang on frame end of table
- block base is mounted flush to end of top

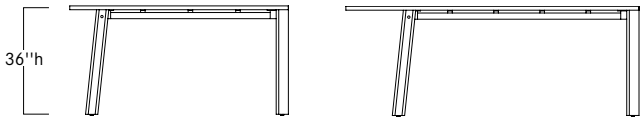

Frame base with 10" overhang

Frame base with 20" overhang

	sku	w	d	h	**PLL** solid **WGL** woodgrain	**OAK** oak **WLT** walnut
36"d tables	BEA	60	36	36	7440	8975
	BFA	66	36	36	7598	9092
	BGA	72	36	36	7748	9221
	BHA	78	36	36	7905	9330
	BIA	84	36	36	8439	9958
	BJA	90	36	36	8868	10539
	BKA	96	36	36	9066	10684
	BLA	102	36	36	9747	11325
	BMA	108	36	36	9945	11481
	BNA	114	36	36	10144	11639
	BOA	120	36	36	10346	11797
42"d tables 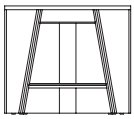	BEB	60	42	36	7611	9145
	BFB	66	42	36	7765	9262
	BGB	72	42	36	7919	9392
	BHB	78	42	36	8074	9501
	BIB	84	42	36	8610	10127
	BJB	90	42	36	9293	10964
	BKB	96	42	36	9491	11109
	BLB	102	42	36	10172	11755
	BMB	108	42	36	10373	11909
	BNB	114	42	36	10568	12068
	BOB	120	42	36	10769	12222
48"d tables 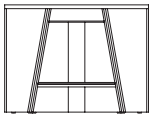	BFC	66	48	36	7934	9435
	BGC	72	48	36	8089	9561
	BHC	78	48	36	8246	9672
	BIC	84	48	36	8780	10298
	BJC	90	48	36	9464	11135
	BKC	96	48	36	9662	11279
	BLC	102	48	36	10342	11923
	BMC	108	48	36	10544	12078
	BNC	114	48	36	10741	12236
	BOC	120	48	36	10940	12392

specification codes example: BPS-SKU-ACSQ000

series	sku	base	corner	power
blueprint B P S -	-	AC frame A C	SQ square RR 3½'' radius **upcharge $150**	surface mount - pgs 90-92 mediatrac1 - pgs 94-106 000 none or undermount - pgs 86 - 89

material/finish code example: PLL 805 OAK 805

base material	base finish	top material	top finish
OAK oak WLT walnut	see page 4	PLL solid laminate WGL woodgrain laminate OAK oak WLT walnut	see pages 3-4

42''h frame/block freestanding table

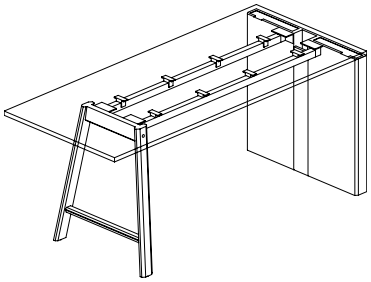

frame/block base

- 60''w-90''w has a 10'' overhang, 96''w-120''w has a 20'' overhang on frame end of table
- block base is mounted flush to end of top
- 48'' tops are not available for 42''h frame/block table

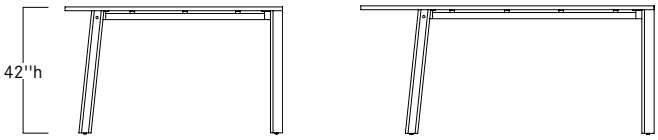

Frame base with 10" overhang

Frame base with 20" overhang

	sku	w	d	h	**PLL** solid **WGL** woodgrain	**OAK** oak **WLT** walnut
36"d tables	CEA	60	36	42	7526	9059
	CFA	66	36	42	7682	9180
	CGA	72	36	42	7834	9308
	CHA	78	36	42	7987	9417
	CIA	84	36	42	8524	10043
	CJA	90	36	42	8950	10622
	CKA	96	36	42	9149	10767
	CLA	102	36	42	9831	11413
	CMA	108	36	42	10031	11566
	CNA	114	36	42	10230	11725
	COA	120	36	42	10431	11883
42"d tables	CEB	60	42	42	7696	9232
	CFB	66	42	42	7851	9349
	CGB	72	42	42	8004	9476
	CHB	78	42	42	8159	9586
	CIB	84	42	42	8693	10214
	CJB	90	42	42	9379	11049
	CKB	96	42	42	9575	11195
	CLB	102	42	42	10256	11837
	CMB	108	42	42	10457	11996
	CNB	114	42	42	10656	12153
	COB	120	42	42	10856	12310

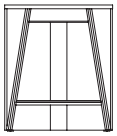

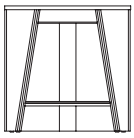

specification codes example: BPS-SKU-ACSQ000

series	**sku**	**base**	**corner**	**power**
blueprint		AC frame	SQ square	surface mount - pgs 90-92
				mediatrac1 - pgs 94-106
			RR 3½'' radius	000 none or undermount - pgs 86 - 89
			upcharge $150	
B P S -	-	A C		

material/finish code example: PLL 805 OAK 805

base material	**base finish**	**top material**	**top finish**
OAK oak	see page 4	PLL solid laminate	see pages 3-4
WLT walnut		WGL woodgrain laminate	
		OAK oak	
		WLT walnut	

30''h frame starter table

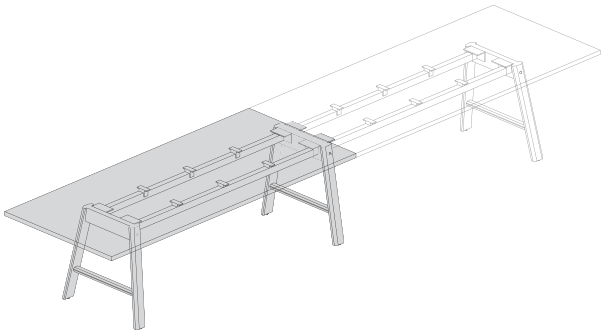

frame base

- 20'' overhang on free ends of all 30''h tables
- frame base starter tables must be specified with additional endrun tables

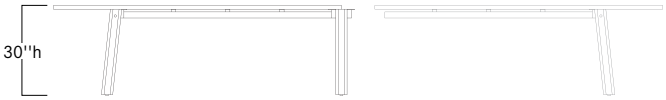

Frame starter connects to endrun tables

	sku	w	d	h	**PLL** solid **WGL** woodgrain	**OAK** oak **WLT** walnut
36"d tables	DEA	60	36	30	5564	7101
	DFA	66	36	30	5722	7218
	DGA	72	36	30	5819	7334
	DHA	78	36	30	5935	7450
	DIA	84	36	30	6396	7911
	DJA	90	36	30	6820	8492
	DKA	96	36	30	7019	8636
	DLA	102	36	30	7700	9281
	DMA	108	36	30	7901	9436
	DNA	114	36	30	8099	9594
	DOA	120	36	30	8301	9752
42"d tables	DEB	60	42	30	5649	7183
	DFB	66	42	30	5805	7303
	DGB	72	42	30	5921	7420
	DHB	78	42	30	6037	7536
	DIB	84	42	30	6480	7998
	DJB	90	42	30	7162	8833
	DKB	96	42	30	7361	8976
	DLB	102	42	30	8040	9622
	DMB	108	42	30	8242	9778
	DNB	114	42	30	8439	9936
	DOB	120	42	30	8640	10091
48"d tables	DFC	66	48	30	5890	7391
	DGC	72	48	30	6006	7507
	DHC	78	48	30	6123	7624
	DIC	84	48	30	6565	8082
	DJC	90	48	30	7249	8920
	DKC	96	48	30	7446	9062
	DLC	102	48	30	8126	9705
	DMC	108	48	30	8326	9861
	DNC	114	48	30	8524	10023
	DOC	120	48	30	8726	10178

specification codes example: BPS-SKU-AASQ000

series	**sku**	**base**	**corner**	**power**
blueprint B P S -	-	AA frame A A	SQ square RR 3½'' radius **upcharge $150**	surface mount - pgs 90-92 mediatrac1 - pgs 94-106 000 none or undermount - pgs 86 - 89

material/finish code example: OAK 805 PLL 805

base material	**base finish**	**top material**	**top finish**
OAK oak WLT walnut	see page 4	PLL solid laminate WGL woodgrain laminate OAK oak WLT walnut	see pages 3-4

36''h frame starter table

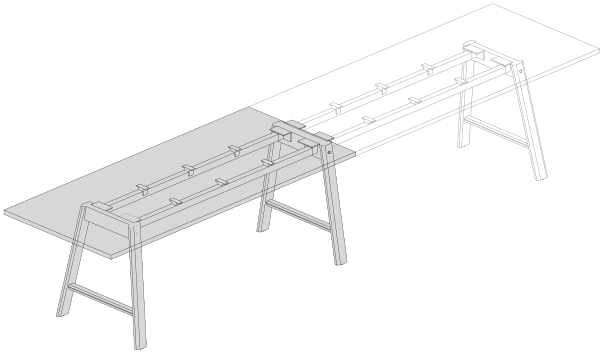

frame base

- 72''w - 90''w has a 10'' overhang, 96''w - 120''w has a 20'' overhang
- frame base starter tables must be specified with additional endrun tables

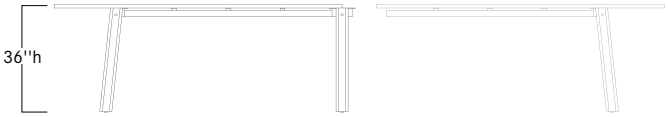

Frame starter connects to endrun tables

	sku	w	d	h	**PLL** solid **WGL** woodgrain	**OAK** oak **WLT** walnut
36"d tables	EGA	72	36	36	6041	7515
	EHA	78	36	36	6200	7625
	EIA	84	36	36	6736	8253
	EJA	90	36	36	7162	8834
	EKA	96	36	36	7361	8977
	ELA	102	36	36	8040	9622
	EMA	108	36	36	8242	9778
	ENA	114	36	36	8439	9935
	EOA	120	36	36	8640	10091
42"d tables 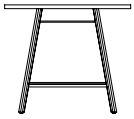	EGB	72	42	36	6128	7601
	EHB	78	42	36	6286	7711
	EIB	84	42	36	6819	8338
	EJB	90	42	36	7504	9174
	EKB	96	42	36	7701	9319
	ELB	102	42	36	8381	9963
	EMB	108	42	36	8581	10117
	ENB	114	42	36	8780	10277
	EOB	120	42	36	8982	10435
48"d tables 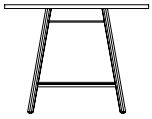	EGC	72	48	36	6214	7686
	EHC	78	48	36	6369	7796
	EIC	84	48	36	6905	8424
	EJC	90	48	36	7585	9258
	EKC	96	48	36	7786	9403
	ELC	102	48	36	8467	10049
	EMC	108	48	36	8669	10203
	ENC	114	48	36	8867	10360
	EOC	120	48	36	9068	10520

specification codes example: BPS-SKU-AASQ000

series	sku	base	corner	power
blueprint B P S -	-	AA frame A A	SQ square RR 3½'' radius **upcharge $150**	surface mount - pgs 90-92 mediatrac1 - pgs 94-106 000 none or undermount - pgs 86 - 89

material/finish code example: OAK 805 PLL 805

base material	base finish	top material	top finish
OAK oak WLT walnut	see page 4	PLL solid laminate WGL woodgrain laminate OAK oak WLT walnut	see pages 3-4

42''h frame starter table

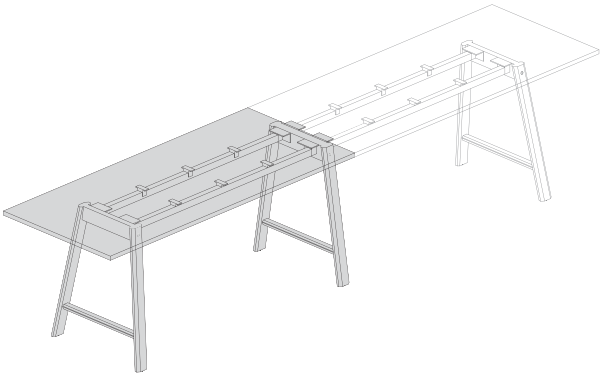

frame base

- 60''w - 90''w has a 10'' overhang, 96''w - 120''w has a 20'' overhang
- frame base starter tables must be specified with additional endrun tables

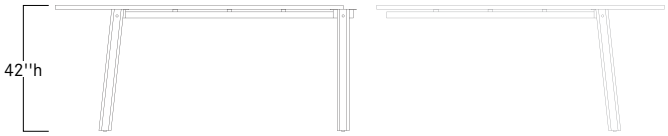

Frame starter connects to endrun tables

	sku	w	d	h	**PLL** solid **WGL** woodgrain	**OAK** oak **WLT** walnut
36"d tables	FEA	60	36	42	6035	7568
	FFA	66	36	42	6190	7686
	FGA	72	36	42	6343	7816
	FHA	78	36	42	6496	7925
	FIA	84	36	42	7032	8552
	FJA	90	36	42	7460	9130
	FKA	96	36	42	7658	9276
	FLA	102	36	42	8338	9920
	FMA	108	36	42	8539	10077
	FNA	114	36	42	8738	10235
	FOA	120	36	42	8938	10389
42"d tables	FEB	60	42	42	6120	7653
	FFB	66	42	42	6272	7770
	FGB	72	42	42	6427	7900
	FHB	78	42	42	6582	8011
	FIB	84	42	42	7117	8636
	FJB	90	42	42	7802	9473
	FKB	96	42	42	7999	9618
	FLB	102	42	42	8678	10261
	FMB	108	42	42	8880	10416
	FNB	114	42	42	9077	10577
	FOB	120	42	42	9280	10734

specification codes example: BPS-SKU-AASQ000

series	sku	base	corner	power
blueprint B P S -	-	AA frame A A	SQ square RR 3½'' radius **upcharge $150**	surface mount - pgs 90-92 mediatrac1 - pgs 94-106 000 none or undermount - pgs 86 - 89

material/finish code example: OAK 805 PLL 805

base material	base finish	top material	top finish
OAK oak WLT walnut	see page 4	PLL solid laminate WGL woodgrain laminate OAK oak WLT walnut	see pages 3-4

42''h narrow frame starter table

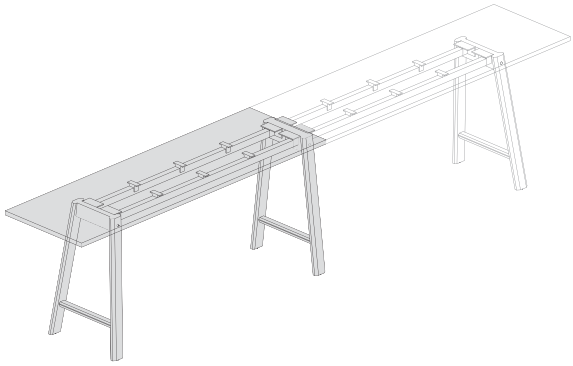

narrow frame base

- 54''w - 90''w has a 10'' overhang, 96''w - 120''w has a 20'' overhang
- **narrow frame base starter tables must be specified with additional narrow endrun tables**

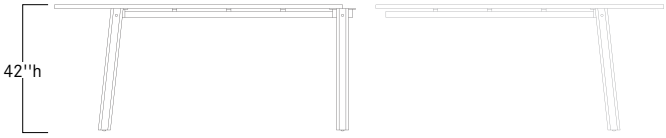

Narrow frame starter connects to narrow endrun tables

	sku	w	d	h	**PLL** solid **WGL** woodgrain	**OAK** oak **WLT** walnut
24"d tables	FDV	54	24	42	5327	6178
	FEV	60	24	42	5479	7013
	FFV	66	24	42	5636	7132
	FGV	72	24	42	5790	7261
	FHV	78	24	42	5944	7542
	FIV	84	24	42	6480	7998
	FJV	90	24	42	6737	8409
	FKV	96	24	42	6935	8552
	FLV	102	24	42	7613	9195
	FMV	108	24	42	7816	9350
	FNV	114	24	42	8013	9509
	FOV	120	24	42	8215	9667
30"d tables	FD0	54	30	42	5375	6910
	FE0	60	30	42	5564	7101
	FF0	66	30	42	5722	7218
	FG0	72	30	42	5873	7346
	FH0	78	30	42	6029	7456
	FI0	84	30	42	6565	8082
	FJ0	90	30	42	6907	8578
	FK0	96	30	42	7104	8723
	FL0	102	30	42	7783	9366
	FM0	108	30	42	7985	9521
	FN0	114	30	42	8183	9678
	FO0	120	30	42	8385	9836

specification codes example: BPS-SKU-AASQ000

series	sku	base	corner	power
blueprint B P S -	-	AA frame A A	SQ square RR 3½'' radius **upcharge $150**	surface mount - pgs 90-92 000 none or undermount - pgs 86 - 89

material/finish code example: OAK 805 PLL 805

base material	base finish	top material	top finish
OAK oak WLT walnut	see page 4	PLL solid laminate WGL woodgrain laminate OAK oak WLT walnut	see pages 3-4

30''h frame starter table

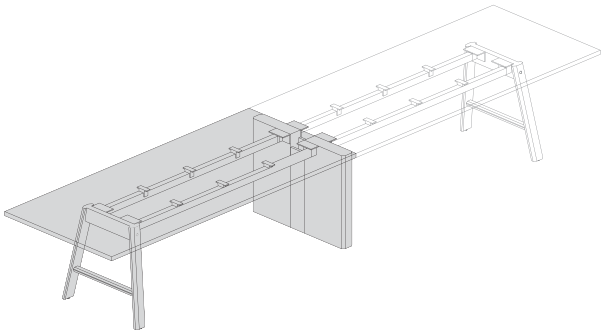

frame/block base

- 20'' overhang on free ends of all 30''h tables
- frame/block base starter tables must be specified with additional frame or block endrun tables with block connections

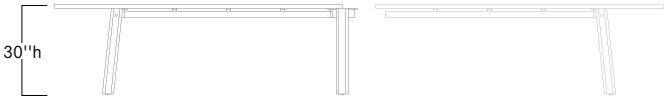

Frame/Block starter connects to frame or block endrun tables

	sku	w	d	h	**PLL** solid **WGL** woodgrain	**OAK** oak **WLT** walnut
36"d tables 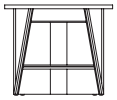	DGA	72	36	30	7578	9050
	DHA	78	36	30	7733	9160
	DIA	84	36	30	8268	9788
	DJA	90	36	30	8697	10366
	DKA	96	36	30	8894	10511
	DLA	102	36	30	9574	11154
	DMA	108	36	30	9777	11312
	DNA	114	36	30	9974	11470
	DOA	120	36	30	10176	11626
42"d tables 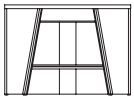	DGB	72	42	30	7748	9220
	DHB	78	42	30	7905	9328
	DIB	84	42	30	8439	9958
	DJB	90	42	30	9124	10794
	DKB	96	42	30	9321	10938
	DLB	102	42	30	10000	11582
	DMB	108	42	30	10202	11737
	DNB	114	42	30	10400	11895
	DOB	120	42	30	10600	12054
48"d tables 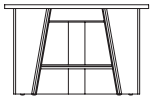	DGC	72	48	30	7919	9392
	DHC	78	48	30	8074	9501
	DIC	84	48	30	8610	10127
	DJC	90	48	30	9293	10964
	DKC	96	48	30	9491	11111
	DLC	102	48	30	10172	11753
	DMC	108	48	30	10373	11908
	DNC	114	48	30	10568	12068
	DOC	120	48	30	10769	12221

specification codes example: BPS-SKU-ACSQ000

series	sku	base	corner	power
blueprint B P S -	-	AC frame/block A C	SQ square RR 3½'' radius **upcharge $150**	surface mount - pgs 90-92 mediatrac1 - pgs 94-106 000 none or undermount - pgs 86 - 89

material/finish code example: OAK 805 PLL 805

base material	base finish	top material	top finish
OAK oak WLT walnut	see page 4	PLL solid laminate WGL woodgrain laminate OAK oak WLT walnut	see pages 3-4

36''h frame starter table

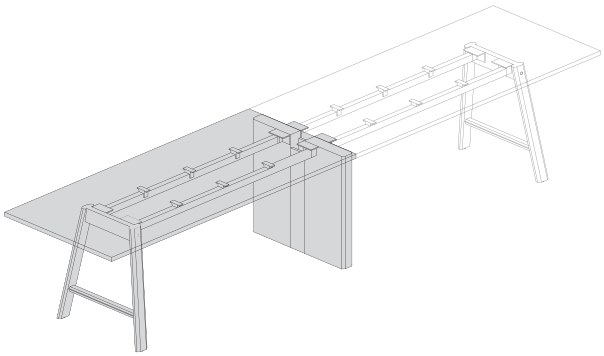

frame/block base

- 60''w - 90''w has a 10'' overhang, 96''w - 120''w has a 20'' overhang
- frame/block base starter tables must be specified with additional frame or block endrun tables with block connections

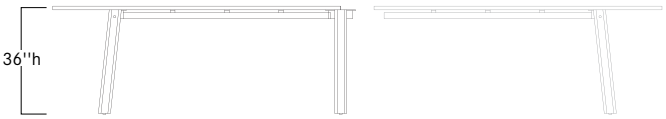

Frame/Block starter connects to frame or block endrun tables

	sku	w	d	h	PLL solid WGL woodgrain	OAK oak WLT walnut
36"d tables	EEA	60	36	36	7440	8975
	EFA	66	36	36	7598	9092
	EGA	72	36	36	7748	9221
	EHA	78	36	36	7905	9330
	EIA	84	36	36	8439	9958
	EJA	90	36	36	8868	10539
	EKA	96	36	36	9066	10684
	ELA	102	36	36	9747	11325
	EMA	108	36	36	9945	11481
	ENA	114	36	36	10144	11639
	EOA	120	36	36	10346	11797
42'd tables	EEB	60	42	36	7611	9145
	EFB	66	42	36	7765	9262
	EGB	72	42	36	7919	9392
	EHB	78	42	36	8074	9501
	EIB	84	42	36	8610	10127
	EJB	90	42	36	9293	10964
	EKB	96	42	36	9491	11109
	ELB	102	42	36	10172	11755
	EMB	108	42	36	10373	11909
	ENB	114	42	36	10568	12068
	EOB	120	42	36	10769	12222
48"d tables	EFC	66	48	36	7934	9435
	EGC	72	48	36	8089	9561
	EHC	78	48	36	8246	9672
	EIC	84	48	36	8780	10298
	EJC	90	48	36	9464	11135
	EKC	96	48	36	9662	11279
	ELC	102	48	36	10342	11923
	EMC	108	48	36	10544	12078
	ENC	114	48	36	10741	12236
	EOC	120	48	36	10940	12392

specification codes example: BPS-SKU-ACSQ000

series	sku	base	corner	power
blueprint B P S -	-	AC frame/block A C	SQ square RR 3½'' radius **upcharge $150**	surface mount - pgs 90-92 mediatrac1 - pgs 94-106 000 none or undermount - pgs 86 - 89

material/finish code example: OAK 805 PLL 805

base material	base finish	top material	top finish
OAK oak WLT walnut	see page 4	PLL solid laminate WGL woodgrain laminate OAK oak WLT walnut	see pages 3-4

42''h frame starter table

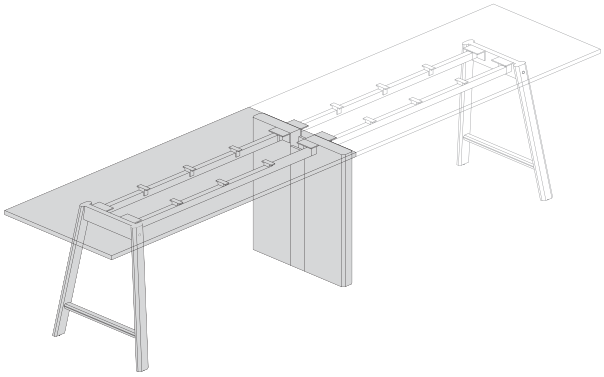

frame/block base

- 60''w - 90''w has a 10'' overhang, 96''w - 120''w has a 20'' overhang
- frame/block base starter tables must be specified with additional frame or block endrun tables with block connections

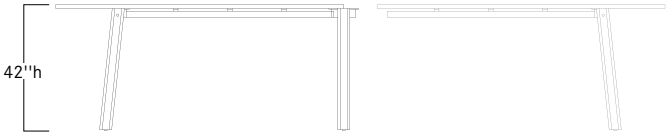

Frame/Block starter connects to frame or block endrun tables

	sku	w	d	h	**PLL** solid **WGL** woodgrain	**OAK** oak **WLT** walnut
36"d tables	FEA	60	36	42	7526	9059
	FFA	66	36	42	7682	9180
	FGA	72	36	42	7834	9308
	FHA	78	36	42	7987	9417
	FIA	84	36	42	8524	10043
	FJA	90	36	42	8950	10622
	FKA	96	36	42	9149	10767
	FLA	102	36	42	9831	11413
	FMA	108	36	42	10031	11566
	FNA	114	36	42	10230	11725
	FOA	120	36	42	10431	11883
42"d tables	FEB	60	42	42	7696	9232
	FFB	66	42	42	7851	9349
	FGB	72	42	42	8004	9476
	FHB	78	42	42	8159	9586
	FIB	84	42	42	8693	10214
	FJB	90	42	42	9379	11049
	FKB	96	42	42	9575	11195
	FLB	102	42	42	10256	11837
	FMB	108	42	42	10457	11996
	FNB	114	42	42	10656	12153
	FOB	120	42	42	10856	12310

specification codes example: BPS-SKU-ACSQ000

series	sku	base	corner	power
blueprint B P S -	-	AC frame/block A C	SQ square RR 3½'' radius **upcharge $150**	surface mount - pgs 90-92 mediatrac1 - pgs 94-106 000 none or undermount - pgs 86 - 89

material/finish code example: OAK 805 PLL 805

base material	base finish	top material	top finish
OAK oak WLT walnut	see page 4	PLL solid laminate WGL woodgrain laminate OAK oak WLT walnut	see pages 3-4

36''h frame stepped table

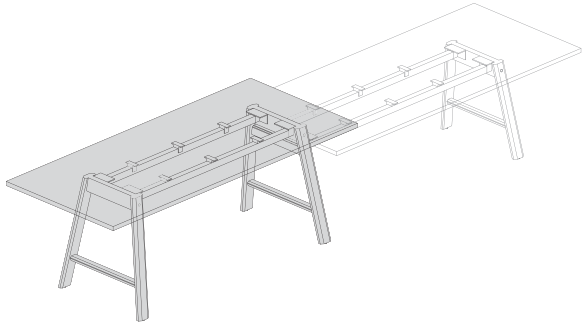

frame 36''h to 30''h stepped table

- **36''h step tables only connect to 30''h tables**
- 60''w - 90''w has a 10'' overhang, 96''w - 120''w has a 20'' overhang on free end
- all tables have a 10''w overhang on connecting end
- frame stepped tables must be specified with additional 30''h frame endrun tables with frame stepped connection

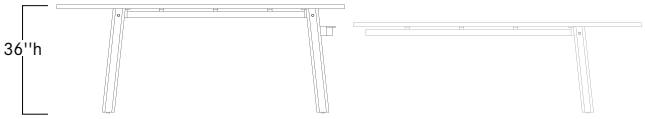

Frame stepped starter tables only connect to 30''h frame endrun tables

	sku	w	d	h	**PLL** solid **WGL** woodgrain	**OAK** oak **WLT** walnut
36"d tables	MEA	60	36	36	6161	7696
	MFA	66	36	36	6317	7816
	MGA	72	36	36	6470	7943
	MHA	78	36	36	6623	8053
	MIA	84	36	36	7160	8678
	MJA	90	36	36	7585	9258
	MKA	96	36	36	7786	9403
	MLA	102	36	36	8467	10049
	MMA	108	36	36	8669	10203
	MNA	114	36	36	8867	10360
	MOA	120	36	36	9068	10520
42"d tables	MEB	60	42	36	6246	7781
	MFB	66	42	36	6401	7901
	MGB	72	42	36	6554	8027
	MHB	78	42	36	6711	8137
	MIB	84	42	36	7247	8764
	MJB	90	42	36	7929	9600
	MKB	96	42	36	8127	9743
	MLB	102	42	36	8809	10389
	MMB	108	42	36	9011	10546
	MNB	114	42	36	9206	10703
	MOB	120	42	36	9405	10859
48"d tables	MFC	66	48	36	6487	7985
	MGC	72	48	36	6641	8113
	MHC	78	48	36	6795	8222
	MIC	84	48	36	7331	8850
	MJC	90	48	36	8015	9685
	MKC	96	48	36	8213	9831
	MLC	102	48	36	8892	10475
	MMC	108	48	36	9092	10632
	MNC	114	48	36	9292	10788
	MOC	120	48	36	9492	10946

specification codes example: BPS-SKU-AASQ000

series	sku	base	corner	power
blueprint		AA frame	SQ square	surface mount - pgs 90-92
				mediatrac1 - pgs 94-106
			RR radius	000 none or undermount - pgs 86 - 89
			upcharge $150	
B P S -	-	A A		

material/finish code example: OAK 805 PLL 805

base material	base finish	top material	top finish
OAK oak	see page 4	PLL solid laminate	see pages 3-4
WLT walnut		WGL woodgrain laminate	
		OAK oak	
		WLT walnut	

42''h frame stepped table

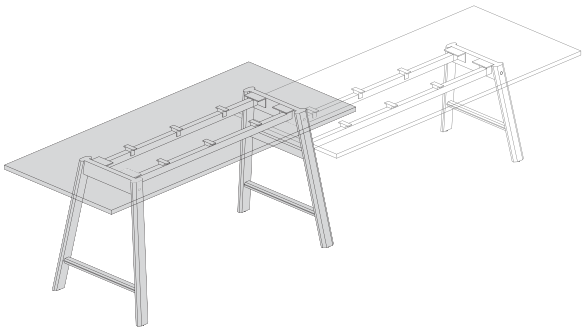

frame 42''h to 30''h stepped table

- **42''h step tables only connect to 30''h tables**
- 60''w - 90''w has a 10'' overhang, 96''w - 120''w has a 20'' overhang on free end
- all tables have a 10''w overhang on connecting end
- 48''d tops not available on 42''h tables
- frame stepped tables must be specified with additional 30''h frame endrun tables with frame stepped connection

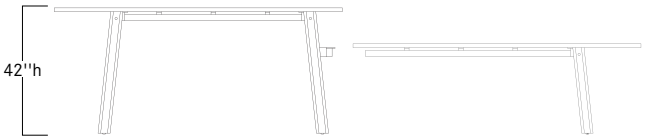

Frame stepped starter tables only connect to 30''h frame endrun tables

	sku	w	d	h	PLL solid WGL woodgrain	OAK oak WLT walnut
36"d tables	NEA	60	36	42	6161	7696
	NFA	66	36	42	6317	7816
	NGA	72	36	42	6470	7943
	NHA	78	36	42	6623	8053
	NIA	84	36	42	7160	8678
	NJA	90	36	42	7585	9258
	NKA	96	36	42	7786	9403
	NLA	102	36	42	8467	10049
	NMA	108	36	42	8669	10203
	NNA	114	36	42	8867	10360
	NOA	120	36	42	9068	10520
42"d tables	NEB	60	42	42	6246	7781
	NFB	66	42	42	6401	7901
	NGB	72	42	42	6554	8027
	NHB	78	42	42	6711	8137
	NIB	84	42	42	7247	8764
	NJB	90	42	42	7929	9600
	NKB	96	42	42	8127	9743
	NLB	102	42	42	8809	10389
	NMB	108	42	42	9011	10546
	NNB	114	42	42	9206	10703
	NOB	120	42	42	9405	10859

specification codes example: BPS-SKU-AASQ000

series	sku	base	corner	power
blueprint B P S -	-	AA frame A A	SQ square RR radius **upcharge $150**	surface mount - pgs 90-92 mediatrac1 - pgs 94-106 000 none or undermount - pgs 86 - 89

material/finish code example: OAK 805 PLL 805

base material	base finish	top material	top finish
OAK oak WLT walnut	see page 4	PLL solid laminate WGL woodgrain laminate OAK oak WLT walnut	see pages 3-4

36”h frame stepped table

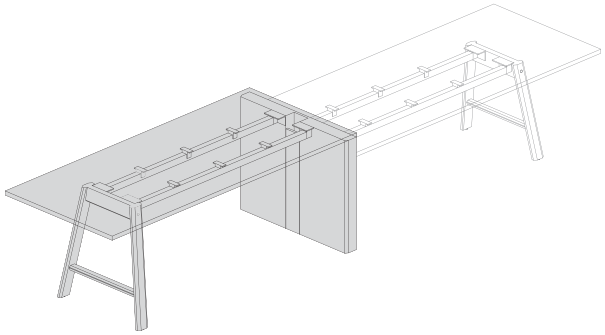

frame/block 36''h to 30''h stepped table

- **36''h step tables only connect to 30''h tables**
- 60''w - 90''w has a 10'' overhang, 96''w - 120''w has a 20'' overhang on free end
- frame/block stepped tables must be specified with additional 30''h frame or block endrun tables with block stepped connection

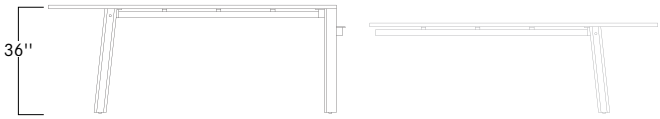

Frame stepped block table only connect to 30''h frame or block endrun tables

	sku	w	d	h	**PLL** solid **WGL** woodgrain	**OAK** oak **WLT** walnut
36"d tables	MEA	60	36	36	7611	9145
	MFA	66	36	36	7766	9264
	MGA	72	36	36	7919	9392
	MHA	78	36	36	8074	9501
	MIA	84	36	36	8610	10127
	MJA	90	36	36	9038	10708
	MKA	96	36	36	9235	10854
	MLA	102	36	36	9915	11497
	MMA	108	36	36	10116	11653
	MNA	114	36	36	10313	11808
	MOA	120	36	36	10515	11968
42"d tables	MEB	60	42	36	7781	9316
	MFB	66	42	36	7934	9435
	MGB	72	42	36	8089	9561
	MHB	78	42	36	8246	9672
	MIB	84	42	36	8780	10298
	MJB	90	42	36	9464	11135
	MKB	96	42	36	9662	11277
	MLB	102	42	36	10342	11923
	MMB	108	42	36	10544	12078
	MNB	114	42	36	10741	12238
	MOB	120	42	36	10940	12392
48"d tables	MFC	66	48	36	8108	9604
	MGC	72	48	36	8259	9733
	MHC	78	48	36	8415	9842
	MIC	84	48	36	8949	10468
	MJC	90	48	36	9636	11306
	MKC	96	48	36	9832	11450
	MLC	102	48	36	10511	12094
	MMC	108	48	36	10712	12249
	MNC	114	48	36	10910	12408
	MOC	120	48	36	11113	12565

specification codes example: BPS-SKU-AASQ000

series	sku	base	corner	power
blueprint B P S -	-	AC frame/block A C	SQ square RR radius **upcharge $150**	surface mount - pgs 90-92 mediatrac1 - pgs 94-106 000 none or undermount - pgs 86 - 89

material/finish code example: OAK 805 PLL 805

base material	base finish	top material	top finish
OAK oak WLT walnut	see page 4	PLL solid laminate WGL woodgrain laminate OAK oak WLT walnut	see pages 3-4

42''h frame stepped table

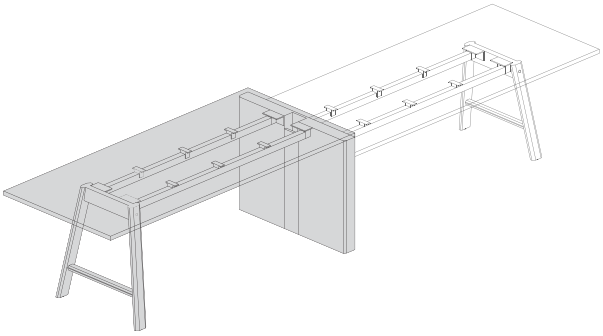

frame/block 42''h to 30''h stepped table

- **42''h step tables only connect to 30''h tables**
- 48''d tops not available with 42''h tables
- 60''w - 90''w has a 10'' overhang, 96''w - 120''w has a 20'' overhang
- frame/block stepped tables must be specified with additional 30''h frame or block endrun tables with block stepped connection

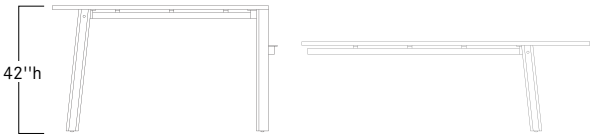

Frame stepped block table only connect to 30''h frame or block endrun tables

	sku	w	d	h	PLL solid WGL woodgrain	OAK oak WLT walnut
36"d tables	NEA	60	36	42	7867	9401
	NFA	66	36	42	8022	9520
	NGA	72	36	42	8175	9647
	NHA	78	36	42	8331	9756
	NIA	84	36	42	8867	10384
	NJA	90	36	42	9293	10964
	NKA	96	36	42	9491	11111
	NLA	102	36	42	10172	11753
	NMA	108	36	42	10373	11908
	NNA	114	36	42	10568	12068
	NOA	120	36	42	10769	12221
42"d tables	NEB	60	42	42	8038	9571
	NFB	66	42	42	8192	9690
	NGB	72	42	42	8343	9818
	NHB	78	42	42	8500	9927
	NIB	84	42	42	9036	10553
	NJB	90	42	42	9722	11390
	NKB	96	42	42	9916	11533
	NLB	102	42	42	10598	12179
	NMB	108	42	42	10799	12335
	NNB	114	42	42	10996	12493
	NOB	120	42	42	11198	12651

specification codes example: BPS-SKU-ACSQ000

series	sku	base	corner	power
blueprint B P S -	-	AC frame/block A C	SQ square RR radius **upcharge $150**	surface mount - pgs 90-92 mediatrac1 - pgs 94-106 000 none or undermount - pgs 86 - 89

material/finish code example: OAK 805 PLL 805

base material	base finish	top material	top finish
OAK oak WLT walnut	see page 4	PLL solid laminate WGL woodgrain laminate OAK oak WLT walnut	see pages 3-4

30''h frame endrun table

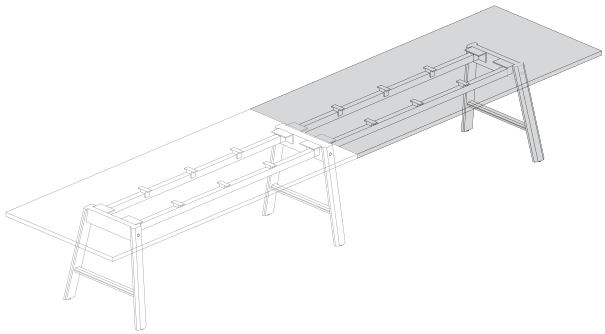

frame base with frame connection

- 20'' overhang on free ends of all 30''h tables
- frame base endrun tables with frame connection must be specified with additional frame base starter tables

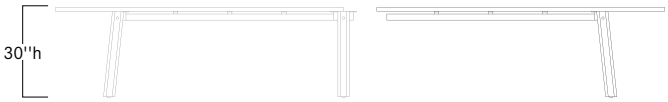

Endrun frame connection connects to frame starter tables

	sku	w	d	h	PA frame connection: PLL solid, WGL woodgrain	PA frame connection: OAK oak, WLT walnut
36"d tables	JGA	72	36	30	4083	5556
	JHA	78	36	30	4237	5664
	JIA	84	36	30	4775	6293
	JJA	90	36	30	5202	6870
	JKA	96	36	30	5400	7017
	JLA	102	36	30	6080	7661
	JMA	108	36	30	6281	7817
	JNA	114	36	30	6480	7975
	JOA	120	36	30	6678	8131
42"d tables	JGB	72	42	30	4169	5643
	JHB	78	42	30	4324	5750
	JIB	84	42	30	4857	6376
	JJB	90	42	30	5543	7215
	JKB	96	42	30	5741	7359
	JLB	102	42	30	6422	8004
	JMB	108	42	30	6621	8158
	JNB	114	42	30	6819	8315
	JOB	120	42	30	7021	8473
48"d tables	JGC	72	48	30	4254	5725
	JHC	78	48	30	4411	5834
	JIC	84	48	30	4946	6463
	JJC	90	48	30	5629	7300
	JKC	96	48	30	5827	7445
	JLC	102	48	30	6507	8086
	JMC	108	48	30	6706	8244
	JNC	114	48	30	6905	8401
	JOC	120	48	30	7105	8559

specification codes example: BPS-SKU-PASQ000

series	sku	connecting base	corner	power
blueprint B P S -	-	PA frame connection P A	SQ square RR radius **upcharge $150**	surface mount - pgs 90-92 mediatrac1 - pgs 94-106 000 none or undermount - pgs 86 - 89

material/finish code example: OAK 805 PLL 805

base material	base finish	top material	top finish
OAK oak WLT walnut	see page 4	PLL solid laminate WGL woodgrain laminate OAK oak WLT walnut	see pages 3-4

36''h frame endrun table

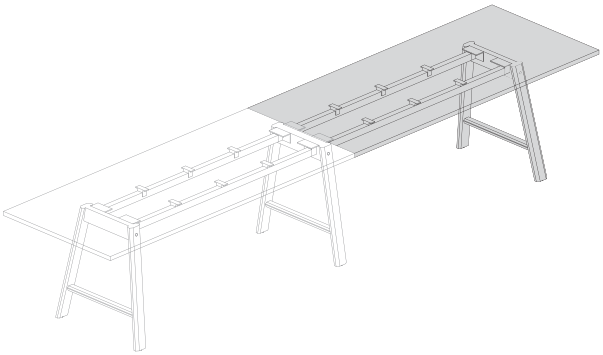

frame base with frame connection

- 60''w - 90''w has a 10'' overhang, 96''w - 120''w has a 20'' overhang
- frame base endrun tables with frame connection must be specified with additional frame base starter tables

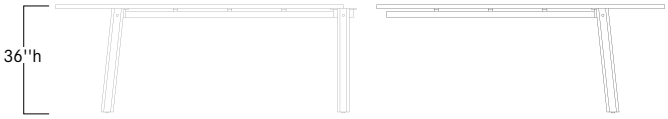

Endrun frame connection connects to frame starter tables

	sku	w	d	h	PA frame connection: PLL solid, WGL woodgrain	PA frame connection: OAK oak, WLT walnut
36"d tables	KEA	60	36	36	3943	5479
	KFA	66	36	36	4103	5599
	KGA	72	36	36	4254	5725
	KHA	78	36	36	4411	5834
	KIA	84	36	36	4946	6463
	KJA	90	36	36	5373	7046
	KKA	96	36	36	5572	7190
	KLA	102	36	36	6250	7832
	KMA	108	36	36	6452	7986
	KNA	114	36	36	6649	8145
	KOA	120	36	36	6850	8303
42"d tables	KEB	60	42	36	4029	5564
	KFB	66	42	36	4187	5685
	KGB	72	42	36	4338	5811
	KHB	78	42	36	4493	5920
	KIB	84	42	36	5030	6547
	KJB	90	42	36	5712	7381
	KKB	96	42	36	5911	7527
	KLB	102	42	36	6592	8173
	KMB	108	42	36	6792	8329
	KNB	114	42	36	6991	8487
	KOB	120	42	36	7192	8643
48"d tables	KFC	66	48	36	4271	5768
	KGC	72	48	36	4425	5898
	KHC	78	48	36	4580	6007
	KIC	84	48	36	5117	6635
	KJC	90	48	36	5798	7469
	KKC	96	48	36	5997	7613
	KLC	102	48	36	6676	8258
	KMC	108	48	36	6877	8414
	KNC	114	48	36	7075	8573
	KOC	120	48	36	7275	8728

specification codes example: BPS-SKU-PASQ000

series	sku	connecting base	corner	power
blueprint B P S -	-	PA frame connection P A	SQ square RR radius **upcharge $150**	surface mount - pgs 90-92 mediatrac1 - pgs 94-106 000 none or undermount - pgs 86 - 89

material/finish code example: OAK 805 PLL 805

base material	base finish	top material	top finish
OAK oak WLT walnut	see page 4	PLL solid laminate WGL woodgrain laminate OAK oak WLT walnut	see pages 3-4

42''h frame endrun table

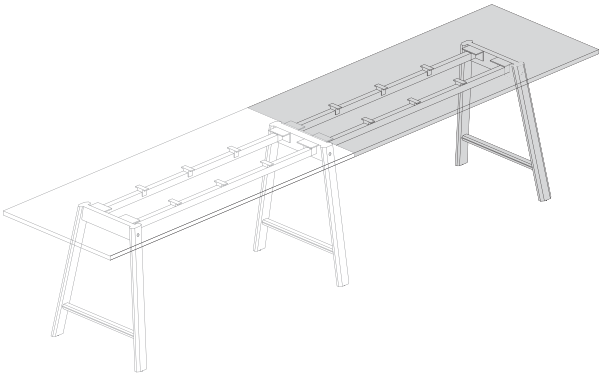

frame base with frame connection

- 60''w - 90''w has a 10'' overhang, 96''w - 120''w has a 20'' overhang
- frame base endrun tables with frame connection must be specified with additional frame base starter tables

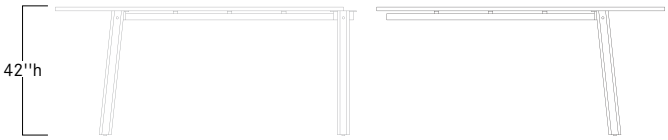

Endrun frame connection connects to frame starter tables

	sku	w	d	h	**PA** frame connection	
					PLL solid **WGL** woodgrain	**OAK** oak **WLT** walnut
36"d tables	LEA	60	36	42	4152	5735
	LFA	66	36	42	4315	5855
	LGA	72	36	42	4470	5985
	LHA	78	36	42	4630	6098
	LIA	84	36	42	5181	6747
	LJA	90	36	42	5621	7343
	LKA	96	36	42	5827	7491
	LLA	102	36	42	6526	8156
	LMA	108	36	42	6736	8314
	LNA	114	36	42	6938	8478
	LOA	120	36	42	7144	8638
42"d tables	LEB	60	42	42	4239	5819
	LFB	66	42	42	4399	5943
	LGB	72	42	42	4558	6072
	LHB	78	42	42	4717	6185
	LIB	84	42	42	5270	6834
	LJB	90	42	42	5972	7694
	LKB	96	42	42	6178	7842
	LLB	102	42	42	6876	8507
	LMB	108	42	42	7084	8667
	LNB	114	42	42	7286	8832
	LOB	120	42	42	7494	8991

specification codes example: BPS-SKU-PASQ000

series	sku	connecting base	corner	power
blueprint B P S -	-	PA frame connection P A	SQ square RR radius **upcharge $150**	surface mount - pgs 90-92 mediatrac1 - pgs 94-106 000 none or undermount - pgs 86 - 89

material/finish code example: OAK 805 PLL 805

base material	base finish	top material	top finish
OAK oak WLT walnut	see page 4	PLL solid laminate WGL woodgrain laminate OAK oak WLT walnut	see pages 3-4

42''h narrow frame endrun table

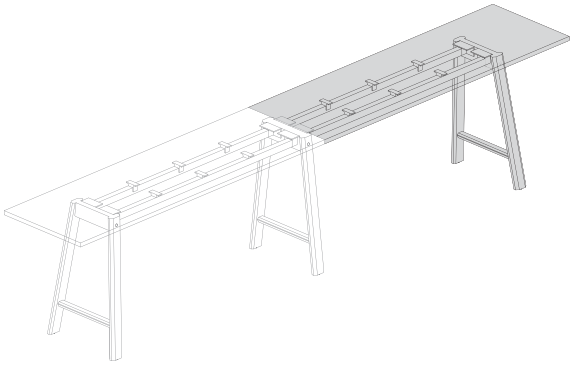

narrow frame base for frame connection

- 24''d and 30''d tops only available at 42''h
- 54''w - 90''w has a 10'' overhang, 96''w - 120''w has a 20'' overhang
- **narrow frame base endrun tables with frame connection must be specified with additional narrow frame base starter tables**

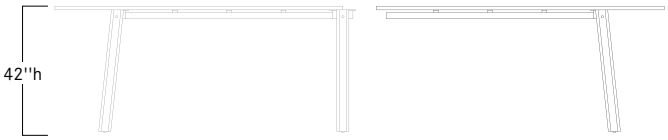

Endrun narrow frame connection connects to narrow frame starter table

	sku	w	d	h	**AS** frame connection	
					PLL solid **WGL** woodgrain	**OAK** oak **WLT** walnut
24"d tables	LDV	54	24	42	3621	4471
	LEV	60	24	42	3774	5308
	LFV	66	24	42	3931	5429
	LGV	72	24	42	4083	5556
	LHV	78	24	42	4237	5669
	LIV	84	24	42	4775	6293
	LJV	90	24	42	5033	6701
	LKV	96	24	42	5230	6847
	LLV	102	24	42	5910	7491
	LMV	108	24	42	6109	7647
	LNV	114	24	42	6308	7804
	LOV	120	24	42	6509	7961
30"d tables	LD0	54	30	42	3703	5275
	LE0	60	30	42	3860	5393
	LF0	66	30	42	4015	5513
	LG0	72	30	42	4169	5643
	LH0	78	30	42	4324	5750
	LI0	84	30	42	4857	6378
	LJ0	90	30	42	5202	6870
	LK0	96	30	42	5400	7017
	LL0	102	30	42	6080	7661
	LM0	108	30	42	6281	7817
	LN0	114	30	42	6480	7975
	LO0	120	30	42	6678	8131

specification codes example: BPS-SKU-PASQ000

series	sku	connecting base	corner	power
blueprint B P S -	-	PA frame connection P A	SQ square RR radius **upcharge $150**	surface mount - pgs 90-92 000 none or undermount - pgs 86 - 89

material/finish code example: OAK 805 PLL 805

base material	base finish	top material	top finish
OAK oak WLT walnut	see page 4	PLL solid laminate WGL woodgrain laminate OAK oak WLT walnut	see pages 3-4

30''h frame endrun table

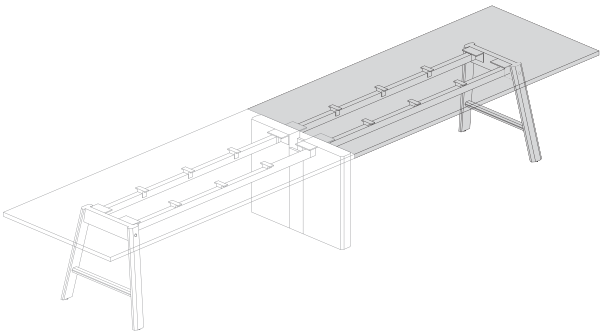

frame base with block connection

- 20'' overhang on free ends of all 30''h tables
- frame base endrun tables with block connection must be specified with additional frame/block base starter tables

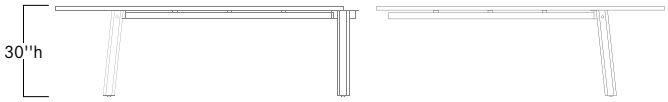

Endrun block connection connects to frame/block starter table

	sku	w	d	h	**TA** block connection: **PLL** solid **WGL** woodgrain	**TA** block connection: **OAK** oak **WLT** walnut
36"d tables	JGA	72	36	30	4083	5556
	JHA	78	36	30	4237	5664
	JIA	84	36	30	4775	6293
	JJA	90	36	30	5202	6870
	JKA	96	36	30	5400	7017
	JLA	102	36	30	6080	7661
	JMA	108	36	30	6281	7817
	JNA	114	36	30	6480	7975
	JOA	120	36	30	6678	8131
42"d tables	JGB	72	42	30	4169	5643
	JHB	78	42	30	4324	5750
	JIB	84	42	30	4857	6376
	JJB	90	42	30	5543	7215
	JKB	96	42	30	5741	7359
	JLB	102	42	30	6422	8004
	JMB	108	42	30	6621	8158
	JNB	114	42	30	6819	8315
	JOB	120	42	30	7021	8473
48"d tables	JGC	72	48	30	4254	5725
	JHC	78	48	30	4411	5834
	JIC	84	48	30	4946	6463
	JJC	90	48	30	5629	7300
	JKC	96	48	30	5827	7445
	JLC	102	48	30	6507	8086
	JMC	108	48	30	6706	8244
	JNC	114	48	30	6905	8401
	JOC	120	48	30	7105	8559

specification codes example: BPS-SKU-TASQ000

series	sku	connecting base	corner	power
blueprint B P S -	-	TA block connection T A	SQ square RR radius **upcharge $150**	surface mount - pgs 90-92 mediatrac1 - pgs 94-106 000 none or undermount - pgs 86 - 89

material/finish code example: OAK 805 PLL 805

base material	base finish	top material	top finish
OAK oak WLT walnut	see page 4	PLL solid laminate WGL woodgrain laminate OAK oak WLT walnut	see pages 3-4

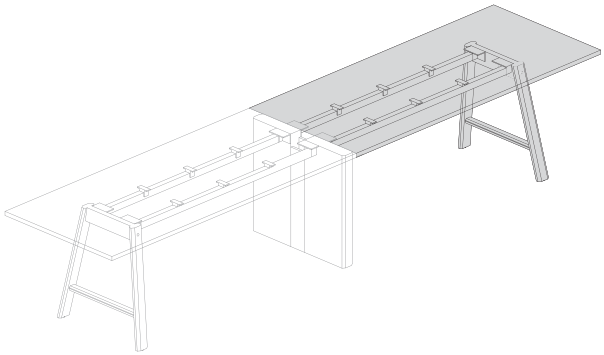

frame base with block connection

- 60''w - 90''w has a 10'' overhang, 96''w - 120''w has a 20'' overhang
- frame base endrun tables with block connection must be specified with additional frame/block base starter tables

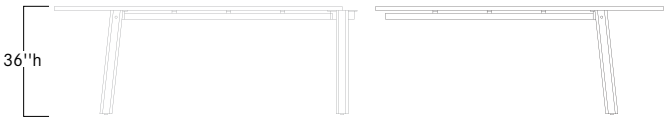

Endrun block connection connects to frame/block starter table

	sku	w	d	h	**TA** block connection: **PLL** solid **WGL** woodgrain	**TA** block connection: **OAK** oak **WLT** walnut
36"d tables	KEA	60	36	36	3943	5479
	KFA	66	36	36	4103	5599
	KGA	72	36	36	4254	5725
	KHA	78	36	36	4411	5834
	KIA	84	36	36	4946	6463
	KJA	90	36	36	5373	7046
	KKA	96	36	36	5572	7190
	KLA	102	36	36	6250	7832
	KMA	108	36	36	6452	7986
	KNA	114	36	36	6649	8145
	KOA	120	36	36	6850	8303
42"d tables 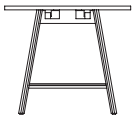	KEB	60	42	36	4029	5564
	KFB	66	42	36	4187	5685
	KGB	72	42	36	4338	5811
	KHB	78	42	36	4493	5920
	KIB	84	42	36	5030	6547
	KJB	90	42	36	5712	7381
	KKB	96	42	36	5911	7527
	KLB	102	42	36	6592	8173
	KMB	108	42	36	6792	8329
	KNB	114	42	36	6991	8487
	KOB	120	42	36	7192	8643
48"d tables 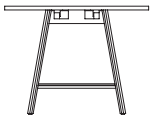	KFC	66	48	36	4271	5768
	KGC	72	48	36	4425	5898
	KHC	78	48	36	4580	6007
	KIC	84	48	36	5117	6635
	KJC	90	48	36	5798	7469
	KKC	96	48	36	5997	7613
	KLC	102	48	36	6676	8258
	KMC	108	48	36	6877	8414
	KNC	114	48	36	7075	8573
	KOC	120	48	36	7275	8728

specification codes example: BPS-SKU-TASQ000

series	sku	connecting base	corner	power
blueprint B P S -	-	TA block connection T A	SQ square RR radius **upcharge $150**	surface mount - pgs 90-92 mediatrac1 - pgs 94-106 000 none or undermount - pgs 86 - 89

material/finish code example: OAK 805 PLL 805

base material	base finish	top material	top finish
OAK oak WLT walnut	see page 4	PLL solid laminate WGL woodgrain laminate OAK oak WLT walnut	see pages 3-4

42''h frame endrun table

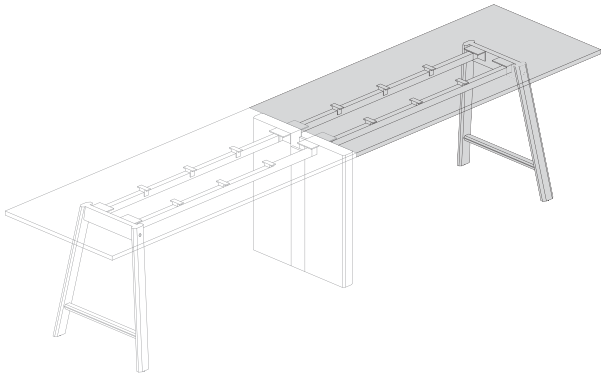

frame base with block connection

- 60''w - 90''w has a 10'' overhang, 96''w - 120''w has a 20'' overhang
- frame base endrun tables with block connection must be specified with additional frame/block base starter tables

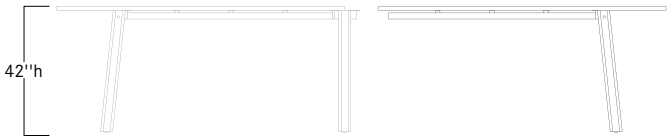

Endrun block connection connects to a frame/block starter table

	sku	w	d	h	**TA** block connection: **PLL** solid, **WGL** woodgrain	**TA** block connection: **OAK** oak, **WLT** walnut
36"d tables	LEA	60	36	42	4152	5735
	LFA	66	36	42	4315	5855
	LGA	72	36	42	4470	5985
	LHA	78	36	42	4630	6098
	LIA	84	36	42	5181	6747
	LJA	90	36	42	5621	7343
	LKA	96	36	42	5827	7491
	LLA	102	36	42	6526	8156
	LMA	108	36	42	6736	8314
	LNA	114	36	42	6938	8478
	LOA	120	36	42	7144	8638
42"d tables	LEB	60	42	42	4239	5819
	LFB	66	42	42	4399	5943
	LGB	72	42	42	4558	6072
	LHB	78	42	42	4717	6185
	LIB	84	42	42	5270	6834
	LJB	90	42	42	5972	7694
	LKB	96	42	42	6178	7842
	LLB	102	42	42	6876	8507
	LMB	108	42	42	7084	8667
	LNB	114	42	42	7286	8832
	LOB	120	42	42	7494	8991

specification codes example: BPS-SKU-TASQ000

series	sku	connecting base	corner	power
blueprint B P S -	-	TA block connection T A	SQ square RR radius **upcharge $150**	surface mount - pgs 90-92 mediatrac1 - pgs 94-106 000 none or undermount - pgs 86 - 89

material/finish code example: OAK 805 PLL 805

base material	base finish	top material	top finish
OAK oak WLT walnut	see page 4	PLL solid laminate WGL woodgrain laminate OAK oak WLT walnut	see pages 3-4

30''h frame endrun table

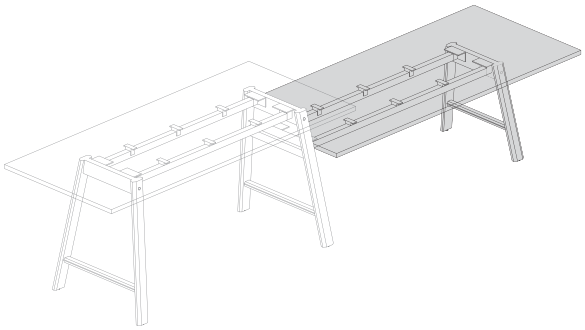

frame base for frame stepped connection

- 20'' overhang on free ends of all 30''h tables
- frame base endrun tables for frame stepped connection must be specified with additional 36''h or 42''h frame stepped table

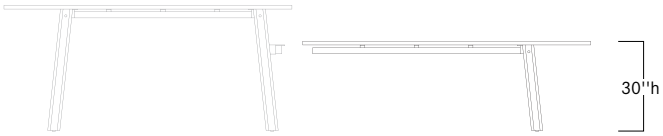

Endrun frame stepped connection only connects to 36'' or 42''h frame stepped table.

	sku	w	d	h	specifications	QA frame stepped connection: PLL solid, WGL woodgrain	QA frame stepped connection: OAK oak, WLT walnut
36"d tables	JGA	72	36	30		4083	5556
	JHA	78	36	30		4237	5664
	JIA	84	36	30		4775	6293
	JJA	90	36	30		5202	6870
	JKA	96	36	30		5400	7017
	JLA	102	36	30		6080	7661
	JMA	108	36	30		6281	7817
	JNA	114	36	30		6480	7975
	JOA	120	36	30		6678	8131
42"d tables	JGB	72	42	30		4169	5643
	JHB	78	42	30		4324	5750
	JIB	84	42	30		4857	6376
	JJB	90	42	30		5543	7215
	JKB	96	42	30		5741	7359
	JLB	102	42	30		6422	8004
	JMB	108	42	30		6621	8158
	JNB	114	42	30		6819	8315
	JOB	120	42	30		7021	8473
48"d tables	JGC	72	48	30	only connects to frame 36"h stepped table	4254	5725
	JHC	78	48	30	only connects to frame 36"h stepped table	4411	5834
	JIC	84	48	30	only connects to frame 36"h stepped table	4946	6463
	JJC	90	48	30	only connects to frame 36"h stepped table	5629	7300
	JKC	96	48	30	only connects to frame 36"h stepped table	5827	7445
	JLC	102	48	30	only connects to frame 36"h stepped table	6507	8086
	JMC	108	48	30	only connects to frame 36"h stepped table	6706	8244
	JNC	114	48	30	only connects to frame 36"h stepped table	6905	8401
	JOC	120	48	30	only connects to frame 36"h stepped table	7105	8559

specification codes example: BPS-SKU-QASQ000

series	sku	connecting base	corner	power
blueprint B P S -	-	QA step connection Q A	SQ square RR radius **upcharge $150**	surface mount - pgs 90-92 mediatrac1 - pgs 94-106 000 none or undermount - pgs 86 - 89

material/finish code example: OAK 805 PLL 805

base material	base finish	top material	top finish
OAK oak WLT walnut	see page 4	PLL solid laminate WGL woodgrain laminate OAK oak WLT walnut	see pages 3-4

30''h frame endrun table

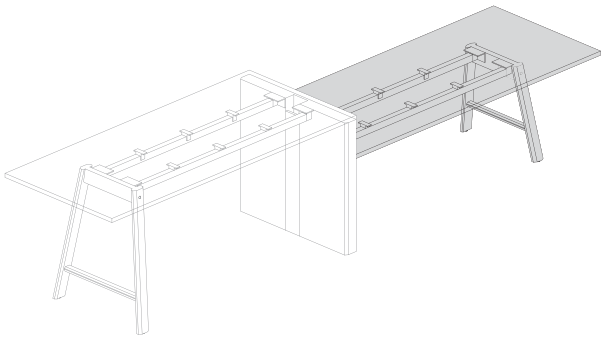

frame base for block stepped connection

- 20'' overhang on free ends of all 30''h tables
- frame base endrun tables for block stepped connection must be specified with additional 36''h or 42''h frame/block stepped table

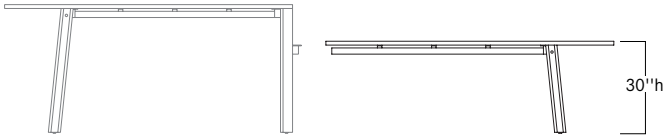

Endrun block stepped connection only connects to 36'' or 42''h frame/block stepped table.

	sku	w	d	h	specifications	**UA** block stepped connection	
						PLL solid **WGL** woodgrain	**OAK** oak **WLT** walnut
36"d tables	JGA	72	36	30		4083	5556
	JHA	78	36	30		4237	5664
	JIA	84	36	30		4775	6293
	JJA	90	36	30		5202	6870
	JKA	96	36	30		5400	7017
	JLA	102	36	30		6080	7661
	JMA	108	36	30		6281	7817
	JNA	114	36	30		6480	7975
	JOA	120	36	30		6678	8131
42"d tables	JGB	72	42	30		4169	5643
	JHB	78	42	30		4324	5750
	JIB	84	42	30		4857	6376
	JJB	90	42	30		5543	7215
	JKB	96	42	30		5741	7359
	JLB	102	42	30		6422	8004
	JMB	108	42	30		6621	8158
	JNB	114	42	30		6819	8315
	JOB	120	42	30		7021	8473
48"d tables	JGC	72	48	30	only connects to frame 36"h stepped table	4254	5725
	JHC	78	48	30	only connects to frame 36"h stepped table	4411	5834
	JIC	84	48	30	only connects to frame 36"h stepped table	4946	6463
	JJC	90	48	30	only connects to frame 36"h stepped table	5629	7300
	JKC	96	48	30	only connects to frame 36"h stepped table	5827	7445
	JLC	102	48	30	only connects to frame 36"h stepped table	6507	8086
	JMC	108	48	30	only connects to frame 36"h stepped table	6706	8244
	JNC	114	48	30	only connects to frame 36"h stepped table	6905	8401
	JOC	120	48	30	only connects to frame 36"h stepped table	7105	8559

specification codes example: BPS-SKU-UASQ000

series	sku	connecting base	corner	power
blueprint B P S -	-	UA block stepped connection U A	SQ square RR radius **upcharge $150**	surface mount - pgs 90-92 mediatrac1 - pgs 94-106 000 none or undermount - pgs 86 - 89

material/finish code example: OAK 805 PLL 805

base material	base finish	top material	top finish
OAK oak WLT walnut	see page 4	PLL solid laminate WGL woodgrain laminate OAK oak WLT walnut	see pages 3-4

30''h block freestanding table

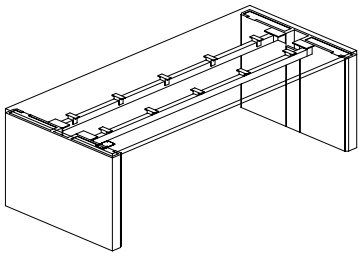

block base

- all block bases are mounted flush to the ends of the top

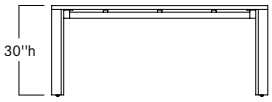

	sku	w	d	h	PLL solid WGL woodgrain	OAK oak WLT walnut
36"d tables	ACA	48	36	30	8492	10102
	ADA	54	36	30	8647	10219
	AEA	60	36	30	8803	10340
	AFA	66	36	30	8961	10457
	AGA	72	36	30	9112	10585
	AHA	78	36	30	9268	10693
	AIA	84	36	30	9803	11321
	AJA	90	36	30	10231	11904
	AKA	96	36	30	10430	12045
	ALA	102	36	30	11111	12689
	AMA	108	36	30	11309	12844
	ANA	114	36	30	11507	13005
	AOA	120	36	30	11710	13161
42"d tables	ADB	54	42	30	8907	10475
	AEB	60	42	30	9059	10595
	AFB	66	42	30	9216	10712
	AGB	72	42	30	9367	10841
	AHB	78	42	30	9526	10949
	AIB	84	42	30	10056	11577
	AJB	90	42	30	10742	12413
	AKB	96	42	30	10939	12558
	ALB	102	42	30	11620	13203
	AMB	108	42	30	11821	13360
	ANB	114	42	30	12021	13516
	AOB	120	42	30	12219	13675
48"d tables	AEC	60	48	30	9315	10856
	AFC	66	48	30	9471	10883
	AGC	72	48	30	9623	11009
	AHC	78	48	30	9779	11118
	AIC	84	48	30	10313	11748
	AJC	90	48	30	10999	12584
	AKC	96	48	30	11197	12726
	ALC	102	48	30	11875	13374
	AMC	108	48	30	12076	13529
	ANC	114	48	30	12274	13688
	AOC	120	48	30	12477	13843

specification codes example: BPS-SKU-CCSQ000

series	sku	base	corner	power
blueprint B P S -	-	CC block C C	SQ square S Q	surface mount - pgs 90-92 mediatrac1 - pgs 94-106 000 none or undermount - pgs 86 - 89

material/finish code example: OAK 805 PLL 805

base material	base finish	top material	top finish
OAK oak WLT walnut	see page 4	PLL solid laminate WGL woodgrain laminate OAK oak WLT walnut	see pages 3 - 4

30''h narrow block freestanding table

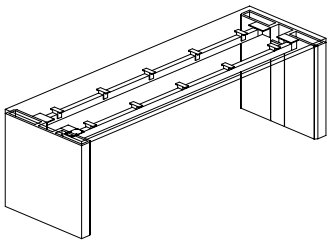

narrow block base

- all block bases are mounted flush to the ends of the top

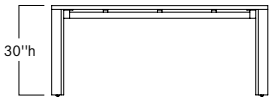

	sku	w	d	h	PLL solid WGL woodgrain	OAK oak WLT walnut
24"d tables	ACV	48	24	30	7982	9588
	ADV	54	24	30	8137	9705
	AEV	60	24	30	8292	9829
	AFV	66	24	30	8450	9945
	AGV	72	24	30	8600	10074
	AHV	78	24	30	8757	10353
	AIV	84	24	30	9292	10809
	AJV	90	24	30	9548	11220
	AKV	96	24	30	9748	11363
	ALV	102	24	30	10429	12008
	AMV	108	24	30	10630	12164
	ANV	114	24	30	10825	12324
	AOV	120	24	30	11027	12479
30"d tables	AC0	48	30	30	8236	9844
	AD0	54	30	30	8392	9963
	AE0	60	30	30	8547	10083
	AF0	66	30	30	8704	10202
	AG0	72	30	30	8855	10328
	AH0	78	30	30	9013	10439
	AI0	84	30	30	9547	11064
	AJ0	90	30	30	9890	11560
	AK0	96	30	30	10087	11705
	AL0	102	30	30	10767	12349
	AM0	108	30	30	10968	12506
	AN0	114	30	30	11168	12663
	AO0	120	30	30	11367	12821

specification codes example: BPS-SKU-CCSQ000

series	sku	base	corner	power
blueprint		CC block	SQ square	surface mount - pgs 90-92 000 none or undermount - pgs 86 - 89
B P S -	-	C C	S Q	

material/finish code example: OAK 805 PLL 805

base material	base finish	top material	top finish
OAK oak WLT walnut	see page 4	PLL solid laminate WGL woodgrain laminate OAK oak WLT walnut	see pages 3 - 4

36''h block freestanding table

block base

- all block bases are mounted flush to the ends of the top

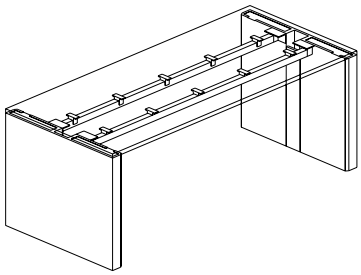

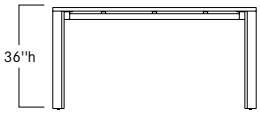

	sku	w	d	h	PLL solid WGL woodgrain	OAK oak WLT walnut
36"d tables	BCA	48	36	36	8664	10270
	BDA	54	36	36	8818	10389
	BEA	60	36	36	8975	10509
	BFA	66	36	36	9130	10630
	BGA	72	36	36	9283	10755
	BHA	78	36	36	9437	10864
	BIA	84	36	36	9974	11492
	BJA	90	36	36	10401	12072
	BKA	96	36	36	10599	12217
	BLA	102	36	36	11279	12862
	BMA	108	36	36	11479	13017
	BNA	114	36	36	11677	13174
	BOA	120	36	36	11878	13332
42"d tables	BDB	54	42	36	9111	10645
	BEB	60	42	36	9231	10765
	BFB	66	42	36	9385	10883
	BGB	72	42	36	9539	11009
	BHB	78	42	36	9695	11118
	BIB	84	42	36	10230	11748
	BJB	90	42	36	10911	12584
	BKB	96	42	36	11112	12726
	BLB	102	42	36	11792	13374
	BMB	108	42	36	11995	13529
	BNB	114	42	36	12188	13688
	BOB	120	42	36	12389	13843
48"d tables	BEC	60	48	36	9486	11026
	BFC	66	48	36	9640	11054
	BGC	72	48	36	9793	11179
	BHC	78	48	36	9948	11292
	BIC	84	48	36	10486	11918
	BJC	90	48	36	11169	12754
	BKC	96	48	36	11366	12897
	BLC	102	48	36	12045	13544
	BMC	108	48	36	12246	13698
	BNC	114	48	36	12444	13857
	BOC	120	48	36	12646	14015

specification codes example: BPS-SKU-CCSQ000

series	sku	base	corner	power
blueprint B P S -	-	CC block C C	SQ square S Q	surface mount - pgs 90-92 mediatrac1 - pgs 94-106 000 none or undermount - pgs 86 - 89

material/finish code example: OAK 805 PLL 805

base material	base finish	top material	top finish
OAK oak WLT walnut	see page 4	PLL solid laminate WGL woodgrain laminate OAK oak WLT walnut	see pages 3 - 4

36''h narrow block freestanding table

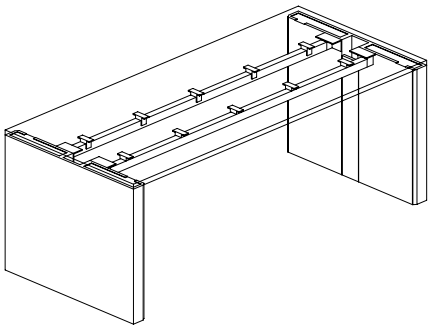

narrow block base

- all block bases are mounted flush to the ends of the top

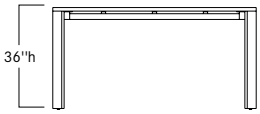

24"d tables

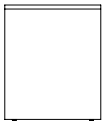

sku	w	d	h	PLL solid / WGL woodgrain	OAK oak / WLT walnut
BCV	48	24	36	8152	9758
BDV	54	24	36	8307	9879
BEV	60	24	36	8465	9998
BFV	66	24	36	8619	10116
BGV	72	24	36	8773	10244
BHV	78	24	36	8926	10523
BIV	84	24	36	9461	10981
BJV	90	24	36	9722	11390
BKV	96	24	36	9916	11533
BLV	102	24	36	10597	12179
BMV	108	24	36	10799	12333
BNV	114	24	36	10996	12493
BOV	120	24	36	11198	12650

30"d tables

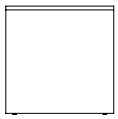

sku	w	d	h	PLL solid / WGL woodgrain	OAK oak / WLT walnut
BC0	48	30	36	8664	10270
BD0	54	30	36	8818	10389
BE0	60	30	36	8975	10509
BF0	66	30	36	9130	10630
BG0	72	30	36	9283	10755
BH0	78	30	36	9437	10864
BI0	84	30	36	9974	11492
BJ0	90	30	36	10401	12072
BK0	96	30	36	10599	12217
BL0	102	30	36	11279	12862
BM0	108	30	36	11479	13017
BN0	114	30	36	11677	13174
BO0	120	30	36	11878	13332

specification codes example: BPS-SKU-CCSQ000

series	sku	base	corner	power
blueprint		CC block	SQ square	surface mount - pgs 90-92 000 none or undermount - pgs 86 - 89
B P S -	-	C C	S Q	

material/finish code example: OAK 805 PLL 805

base material	base finish	top material	top finish
OAK oak WLT walnut	see page 4	PLL solid laminate WGL woodgrain laminate OAK oak WLT walnut	see pages 3 - 4

42''h block freestanding table

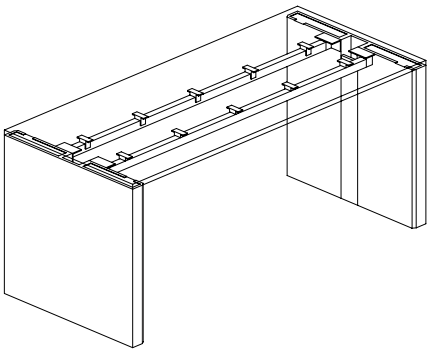

block base

- all block bases are mounted flush to the ends of the top
- 48''d tops are not available for 42''h block table

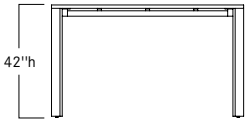

36"d tables

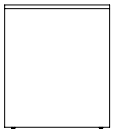

42"d tables

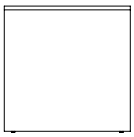

sku	w	d	h	**PLL** solid **WGL** woodgrain	**OAK** oak **WLT** walnut
CCA	48	36	42	8834	10441
CDA	54	36	42	8988	10559
CEA	60	36	42	9145	10679
CFA	66	36	42	9298	10799
CGA	72	36	42	9453	10925
CHA	78	36	42	9608	11036
CIA	84	36	42	10144	11662
CJA	90	36	42	10570	12242
CKA	96	36	42	10768	12386
CLA	102	36	42	11450	13031
CMA	108	36	42	11651	13186
CNA	114	36	42	11850	13346
COA	120	36	42	12051	13502
CDB	54	42	42	9244	10817
CEB	60	42	42	9401	10935
CFB	66	42	42	9556	11054
CGB	72	42	42	9708	11179
CHB	78	42	42	9865	11292
CIB	84	42	42	10400	11918
CJB	90	42	42	11085	12754
CKB	96	42	42	11281	12897
CLB	102	42	42	11962	13544
CMB	108	42	42	12163	13698
CNB	114	42	42	12360	13857
COB	120	42	42	12561	14015

specification codes example: BPS-SKU-CCSQ000

series	sku	base	corner	power
blueprint B P S -	-	CC block C C	SQ square S Q	surface mount - pgs 90-92 mediatrac1 - pgs 94-106 000 none or undermount - pgs 86 - 89

material/finish code example: OAK 805 PLL 805

base material	base finish	top material	top finish
OAK oak WLT walnut	see page 4	PLL solid laminate WGL woodgrain laminate OAK oak WLT walnut	see pages 3 - 4

42''h narrow block freestanding table

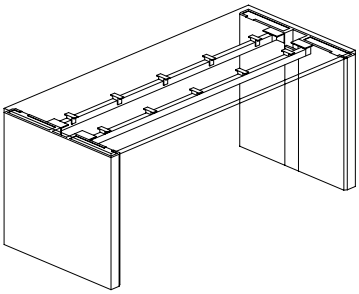

narrow block base

- all block bases are mounted flush to the ends of the top
- 48''d tops are not available for 42''h block table

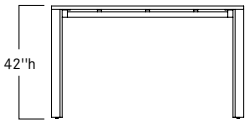

24"d tables

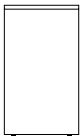

30"d tables

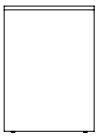

sku	w	d	h	PLL solid WGL woodgrain	OAK oak WLT walnut
CCV	48	24	42	8322	9931
CDV	54	24	42	8478	10049
CEV	60	24	42	8634	10167
CFV	66	24	42	8789	10287
CGV	72	24	42	8941	10414
CHV	78	24	42	9097	10693
CIV	84	24	42	9632	11151
CJV	90	24	42	9890	11560
CKV	96	24	42	10087	11705
CLV	102	24	42	10767	12349
CMV	108	24	42	10968	12506
CNV	114	24	42	11168	12663
COV	120	24	42	11367	12821
CD0	54	30	42	8734	10305
CE0	60	30	42	8890	10423
CF0	66	30	42	9047	10544
CG0	72	30	42	9197	10671
CH0	78	30	42	9351	10782
CI0	84	30	42	9887	11407
CJ0	90	30	42	10231	11904
CK0	96	30	42	10430	12045
CL0	102	30	42	11111	12689
CM0	108	30	42	11309	12844
CN0	114	30	42	11507	13005
CO0	120	30	42	11710	13161

specification codes example: BPS-SKU-CCSQ000

series	sku	base	corner	power
blueprint B P S -	-	CC block C C	SQ square S Q	surface mount - pgs 90-92 000 none or undermount - pgs 86 - 89

material/finish code example: OAK 805 PLL 805

base material	base finish	top material	top finish
OAK oak WLT walnut	see page 4	PLL solid laminate WGL woodgrain laminate OAK oak WLT walnut	see pages 3 - 4

30''h block starter table

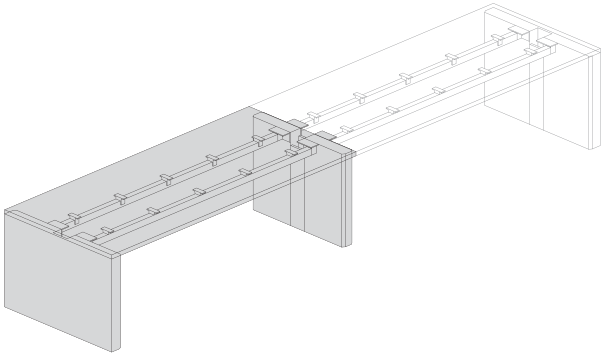

block base

- all block starter bases are mounted flush to the free end of the block table
- block base starter tables must be specified with additional block endrun tables

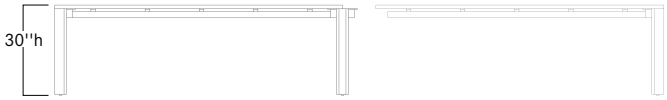

Block starter connects to
block endrun tables

	sku	w	d	h	**PLL** solid **WGL** woodgrain	**OAK** oak **WLT** walnut
36"d tables 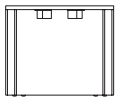	DCA	48	36	30	8834	10441
	DDA	54	36	30	8988	10559
	DEA	60	36	30	9145	10679
	DFA	66	36	30	9298	10799
	DGA	72	36	30	9453	10925
	DHA	78	36	30	9608	11036
	DIA	84	36	30	10144	11662
	DJA	90	36	30	10570	12242
	DKA	96	36	30	10768	12386
	DLA	102	36	30	11450	13031
	DMA	108	36	30	11651	13186
	DNA	114	36	30	11850	13346
	DOA	120	36	30	12051	13502
42"d tables 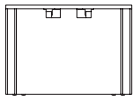	DDB	54	42	30	9244	10817
	DEB	60	42	30	9401	10935
	DFB	66	42	30	9556	11054
	DGB	72	42	30	9708	11179
	DHB	78	42	30	9865	11292
	DIB	84	42	30	10400	11918
	DJB	90	42	30	11085	12754
	DKB	96	42	30	11281	12897
	DLB	102	42	30	11962	13544
	DMB	108	42	30	12163	13698
	DNB	114	42	30	12360	13857
	DOB	120	42	30	12561	14015
48"d tables 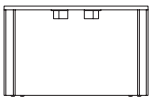	DEC	60	48	30	9656	11198
	DFC	66	48	30	9810	11309
	DGC	72	48	30	9964	11438
	DHC	78	48	30	10120	11547
	DIC	84	48	30	10656	12173
	DJC	90	48	30	11339	13009
	DKC	96	48	30	11536	13156
	DLC	102	48	30	12217	13800
	DMC	108	48	30	12418	13953
	DNC	114	48	30	12616	14113
	DOC	120	48	30	12817	14270

specification codes example: BPS-SKU-CCSQ000

series	sku	base	corner	power
blueprint B P S -	-	CC block C C	SQ square S Q	surface mount - pgs 90-92 mediatrac1 - pgs 94-106 000 none or undermount - pgs 86 - 89

material/finish code example: OAK 805 PLL 805

base material	base finish	top material	top finish
OAK oak WLT walnut	see page 4	PLL solid laminate WGL woodgrain laminate OAK oak WLT walnut	see pages 3 - 4

30''h narrow block starter table

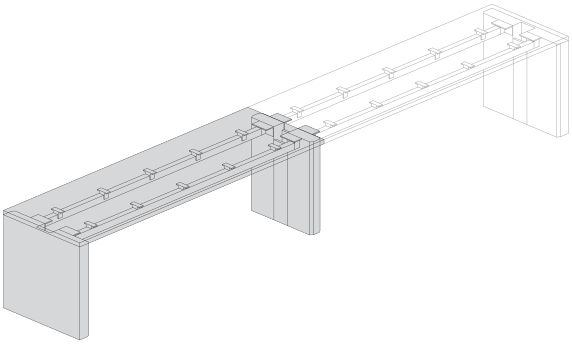

narrow block base

- all block starter bases are mounted flush to the free end of the block table
- **narrow block base starter tables must be specified with additional narrow block endrun tables**

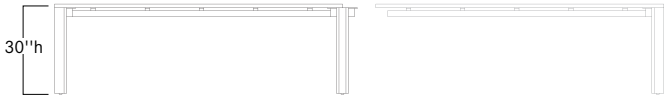

Narrow block starter connects to narrow block endrun tables

	sku	w	d	h	**PLL** solid **WGL** woodgrain	**OAK** oak **WLT** walnut
24"d tables 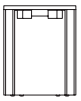	DCV	48	24	30	8322	9931
	DDV	54	24	30	8477	10049
	DEV	60	24	30	8634	10167
	DFV	66	24	30	8789	10287
	DGV	72	24	30	8941	10414
	DHV	78	24	30	9097	10693
	DIV	84	24	30	9632	11151
	DJV	90	24	30	9890	11560
	DKV	96	24	30	10087	11705
	DLV	102	24	30	10767	12349
	DMV	108	24	30	10968	12506
	DNV	114	24	30	11168	12663
	DOV	120	24	30	11367	12821
30"d tables 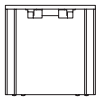	DC0	48	30	30	8578	10184
	DD0	54	30	30	8734	10305
	DE0	60	30	30	8890	10423
	DF0	66	30	30	9047	10544
	DG0	72	30	30	9197	10671
	DH0	78	30	30	9351	10782
	DI0	84	30	30	9887	11407
	DJ0	90	30	30	10231	11904
	DK0	96	30	30	10430	12045
	DL0	102	30	30	11111	12689
	DM0	108	30	30	11309	12844
	DN0	114	30	30	11507	13005
	DO0	120	30	30	11710	13161

specification codes example: BPS-SKU-CCSQ000

series	sku	base	corner	power
blueprint B P S -	-	CC block C C	SQ square S Q	surface mount - pgs 90-92 000 none or undermount - pgs 86 - 89

material/finish code example: OAK 805 PLL 805

base material	base finish	top material	top finish
OAK oak WLT walnut	see page 4	PLL solid laminate WGL woodgrain laminate OAK oak WLT walnut	see pages 3 - 4

36''h block starter table

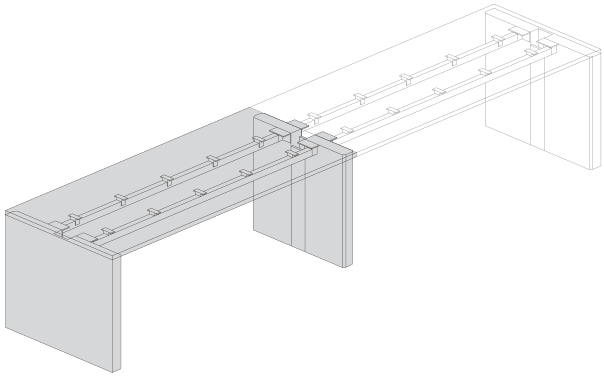

block base

- all block starter bases are mounted flush to the free end of the block table
- block base starter tables must be specified with additional block endrun tables

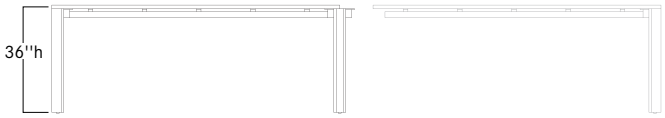

Block starter connects to
block endrun tables

	sku	w	d	h	**PLL** solid **WGL** woodgrain	**OAK** oak **WLT** walnut
36"d tables 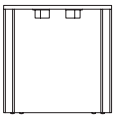	ECA	48	36	36	8920	10527
	EDA	54	36	36	9075	10645
	EEA	60	36	36	9231	10765
	EFA	66	36	36	9386	10883
	EGA	72	36	36	9539	11009
	EHA	78	36	36	9695	11118
	EIA	84	36	36	10230	11748
	EJA	90	36	36	10657	12328
	EKA	96	36	36	10855	12473
	ELA	102	36	36	11533	13118
	EMA	108	36	36	11736	13272
	ENA	114	36	36	11933	13432
	EOA	120	36	36	12133	13586
42"d tables 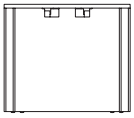	EDB	54	42	36	9328	10900
	EEB	60	42	36	9486	11020
	EFB	66	42	36	9640	11140
	EGB	72	42	36	9793	11267
	EHB	78	42	36	9948	11376
	EIB	84	42	36	10486	12002
	EJB	90	42	36	11169	12839
	EKB	96	42	36	11366	12983
	ELB	102	42	36	12045	13628
	EMB	108	42	36	12246	13784
	ENB	114	42	36	12444	13942
	EOB	120	42	36	12646	14099
48"d tables 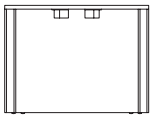	EEC	60	48	36	9740	11282
	EFC	66	48	36	9897	11394
	EGC	72	48	36	10050	11523
	EHC	78	48	36	10204	11631
	EIC	84	48	36	10741	12260
	EJC	90	48	36	11423	13094
	EKC	96	48	36	11621	13239
	ELC	102	48	36	12301	13884
	EMC	108	48	36	12505	14039
	ENC	114	48	36	12701	14197
	EOC	120	48	36	12903	14355

specification codes example: BPS-SKU-CCSQ000

series	sku	base	corner	power
blueprint B P S -	-	CC block C C	SQ square S Q	surface mount - pgs 90-92 mediatrac1 - pgs 94-106 000 none or undermount - pgs 86 - 89

material/finish code example: OAK 805 PLL 805

base material	base finish	top material	top finish
OAK oak WLT walnut	see page 4	PLL solid laminate WGL woodgrain laminate OAK oak WLT walnut	see pages 3 - 4

36''h narrow block starter table

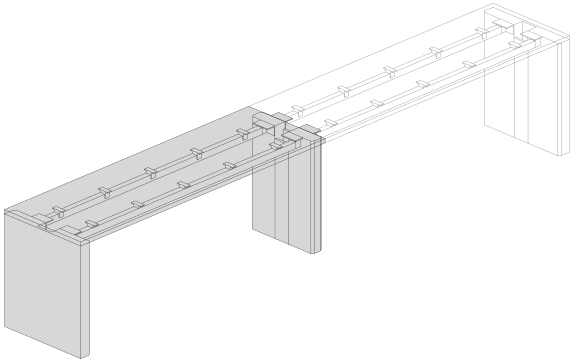

narrow block base

- all block starter bases are mounted flush to the free end of the block table
- **narrow block base starter tables must be specified with additional narrow block endrun tables**

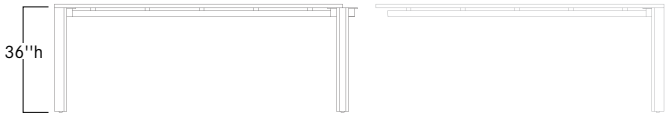

Narrow block starter connects to narrow block endrun tables

24"d tables

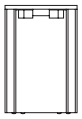

sku	w	d	h	**PLL** solid **WGL** woodgrain	**OAK** oak **WLT** walnut
ECV	48	24	36	8492	10102
EDV	54	24	36	8647	10219
EEV	60	24	36	8803	10340
EFV	66	24	36	8961	10457
EGV	72	24	36	9112	10585
EHV	78	24	36	9268	10864
EIV	84	24	36	9803	11321
EJV	90	24	36	10059	11730
EKV	96	24	36	10257	11875
ELV	102	24	36	10938	12518
EMV	108	24	36	11141	12676
ENV	114	24	36	11337	12834
EOV	120	24	36	11540	12990

30"d tables

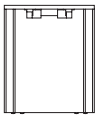

sku	w	d	h	PLL / WGL	OAK / WLT
EC0	48	30	36	8748	10357
ED0	54	30	36	8904	10475
EE0	60	30	36	9059	10595
EF0	66	30	36	9217	10712
EG0	72	30	36	9367	10841
EH0	78	30	36	9526	10949
EI0	84	30	36	10056	11577
EJ0	90	30	36	10401	12072
EK0	96	30	36	10599	12217
EL0	102	30	36	11279	12862
EM0	108	30	36	11479	13017
EN0	114	30	36	11677	13174
EO0	120	30	36	11878	13332

specification codes example: BPS-SKU-CCSQ000

series	sku	base	corner	power
blueprint B P S -	-	CC block C C	SQ square S Q	surface mount - pgs 90-92 000 none or undermount - pgs 86 - 89

material/finish code example: OAK 805 PLL 805

base material	base finish	top material	top finish
OAK oak WLT walnut	see page 4	PLL solid laminate WGL woodgrain laminate OAK oak WLT walnut	see pages 3 - 4

42''h block starter table

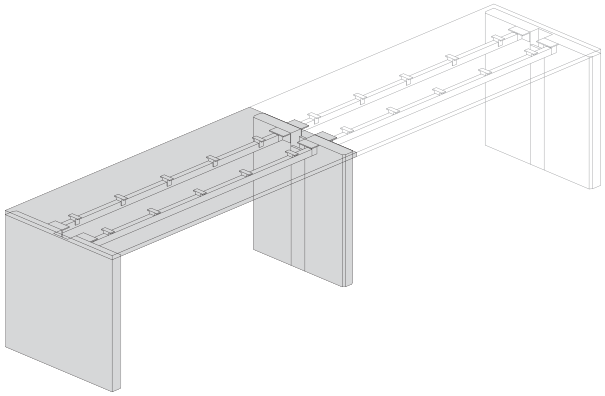

block base

- all block starter bases are mounted flush to the free end of the block table
- block base starter tables must be specified with additional block endrun tables

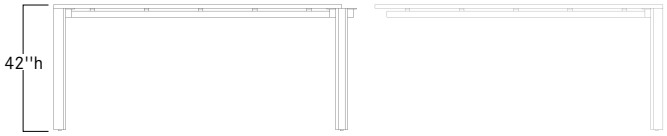

Block starter connects to
block endrun tables

36"d tables

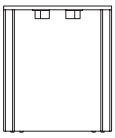

sku	w	d	h	**PLL** solid **WGL** woodgrain	**OAK** oak **WLT** walnut
FCA	48	36	42	9259	10868
FDA	54	36	42	9417	10986
FEA	60	36	42	9571	11105
FFA	66	36	42	9728	11224
FGA	72	36	42	9879	11352
FHA	78	36	42	10035	11462
FIA	84	36	42	10568	12090
FJA	90	36	42	10999	12671
FKA	96	36	42	11197	12814
FLA	102	36	42	11875	13458
FMA	108	36	42	12076	13614
FNA	114	36	42	12274	13772
FOA	120	36	42	12477	13929

42"d tables

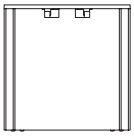

FDB	54	42	42	9672	11244
FEB	60	42	42	9829	11361
FFB	66	42	42	9982	11479
FGB	72	42	42	10138	11608
FHB	78	42	42	10290	11716
FIB	84	42	42	10825	12345
FJB	90	42	42	11509	13181
FKB	96	42	42	11709	13326
FLB	102	42	42	12386	13970
FMB	108	42	42	12588	14125
FNB	114	42	42	12787	14284
FOB	120	42	42	12987	14440

specification codes example: BPS-SKU-CCSQ000

series	sku	base	corner	power
blueprint		CC block	SQ square	surface mount - pgs 90-92 mediatrac1 - pgs 94-106 000 none or undermount - pgs 86 - 89
B P S -	-	C C	S Q	

material/finish code example: OAK 805 PLL 805

base material	base finish	top material	top finish
OAK oak WLT walnut	see page 4	PLL solid laminate WGL woodgrain laminate OAK oak WLT walnut	see pages 3 - 4

42''h narrow block starter table

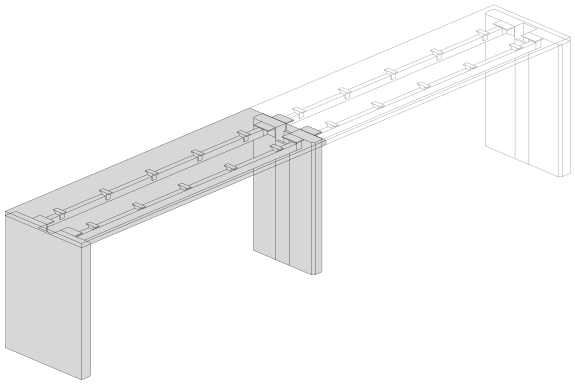

narrow block base

- all block starter bases are mounted flush to the free end of the block table
- **narrow block base starter tables must be specified with additional narrow block endrun tables**

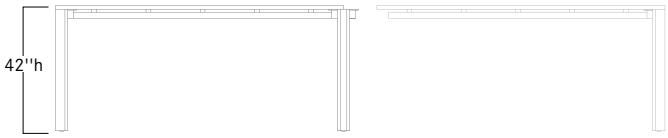

Narrow block starter connects to narrow block endrun tables

24"d tables

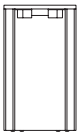

sku	w	d	h	**PLL** solid **WGL** woodgrain	**OAK** oak **WLT** walnut
FCV	48	24	42	8748	10357
FDV	54	24	42	8904	10475
FEV	60	24	42	9059	10595
FFV	66	24	42	9217	10712
FGV	72	24	42	9367	10841
FHV	78	24	42	9526	11118
FIV	84	24	42	10056	11577
FJV	90	24	42	10314	11986
FKV	96	24	42	10514	12131
FLV	102	24	42	11196	12775
FMV	108	24	42	11394	12931
FNV	114	24	42	11594	13090
FOV	120	24	42	11795	13246

30"d tables

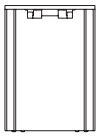

sku	w	d	h	PLL	OAK
FC0	48	30	42	9002	10612
FD0	54	30	42	9160	10731
FE0	60	30	42	9315	10852
FF0	66	30	42	9473	10968
FG0	72	30	42	9623	11097
FH0	78	30	42	9779	11206
FI0	84	30	42	10313	11832
FJ0	90	30	42	10657	12328
FK0	96	30	42	10855	12473
FL0	102	30	42	11533	13118
FM0	108	30	42	11736	13272
FN0	114	30	42	11933	13432
FO0	120	30	42	12133	13586

specification codes example: BPS-SKU-CCSQ000

series	sku	base	corner	power
blueprint B P S -	-	CC block C C	SQ square S Q	surface mount - pgs 90-92 000 none or undermount - pgs 86 - 89

material/finish code example: OAK 805 PLL 805

base material	base finish	top material	top finish
OAK oak WLT walnut	see page 4	PLL solid laminate WGL woodgrain laminate OAK oak WLT walnut	see pages 3 - 4

36''h block stepped table

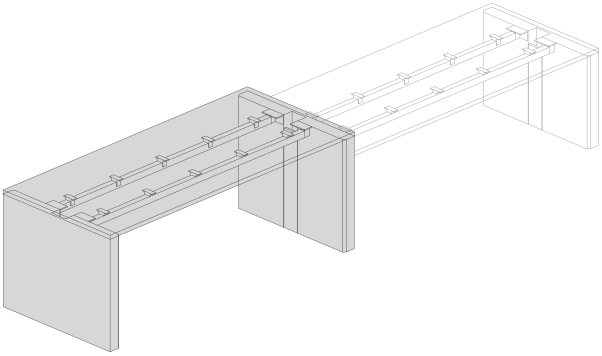

block 36''h to 30''h stepped table

- **36''h step tables only connect to 30''h tables**
- block bases are mounted flush with both short ends of the top
- block stepped tables must be specified with additional 30''h block endrun tables with block stepped connection

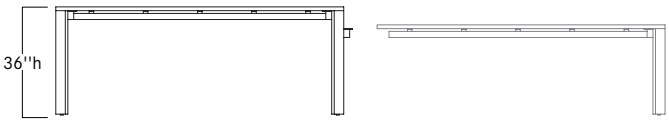

Block stepped tables only connect
to 30''h block endrun tables

	sku	w	d	h	**PLL** solid **WGL** woodgrain	**OAK** oak **WLT** walnut
36"d tables	MCA	48	36	36	8834	10441
	MDA	54	36	36	8988	10559
	MEA	60	36	36	9145	10679
	MFA	66	36	36	9298	10799
	MGA	72	36	36	9453	10925
	MHA	78	36	36	9608	11036
	MIA	84	36	36	10144	11662
	MJA	90	36	36	10570	12242
	MKA	96	36	36	10768	12386
	MLA	102	36	36	11450	13031
	MMA	108	36	36	11651	13186
	MNA	114	36	36	11850	13346
	MOA	120	36	36	12051	13502
42"d tables	MDB	54	42	36	9244	10817
	MEB	60	42	36	9401	10935
	MFB	66	42	36	9556	11054
	MGB	72	42	36	9708	11179
	MHB	78	42	36	9865	11292
	MIB	84	42	36	10400	11918
	MJB	90	42	36	11085	12754
	MKB	96	42	36	11281	12897
	MLB	102	42	36	11962	13544
	MMB	108	42	36	12163	13698
	MNB	114	42	36	12360	13857
	MOB	120	42	36	12561	14015
48"d tables	MEC	60	48	36	9656	11198
	MFC	66	48	36	9810	11309
	MGC	72	48	36	9964	11438
	MHC	78	48	36	10120	11547
	MIC	84	48	36	10656	12173
	MJC	90	48	36	11339	13009
	MKC	96	48	36	11536	13156
	MLC	102	48	36	12217	13800
	MMC	108	48	36	12418	13953
	MNC	114	48	36	12616	14113
	MOC	120	48	36	12817	14270

specification codes example: BPS-SKU-CCSQ000

series	sku	base	corner	power
blueprint B P S -	-	CC block C C	SQ square S Q	surface mount - pgs 90-92 mediatrac1 - pgs 94-106 000 none or undermount - pgs 86 - 89

material/finish code example: OAK 805 PLL 805

base material	base finish	top material	top finish
OAK oak WLT walnut	see page 4	PLL solid laminate WGL woodgrain laminate OAK oak WLT walnut	see pages 3 - 4

36''h narrow block stepped table

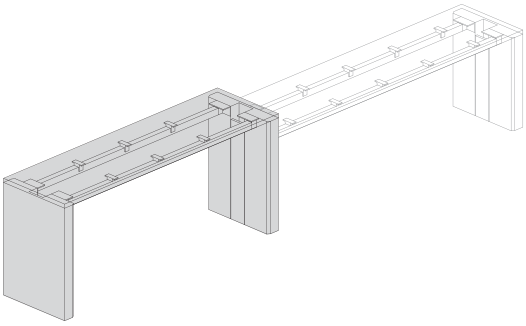

narrow block 36''h to 30''h stepped table

- **36''h step tables only connect to 30''h tables**
- block bases are mounted flush with both short ends of the top
- **narrow block stepped tables must be specified with additional 30''h narrow block endrun tables with narrow block stepped connection**

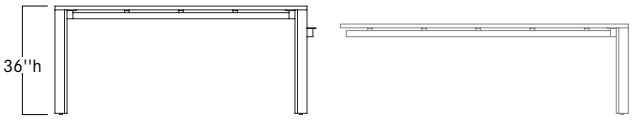

Narrrow block stepped tables only connect to 30''h narrow block endrun tables

	sku	w	d	h	**PLL** solid **WGL** woodgrain	**OAK** oak **WLT** walnut
24"d tables	MCV	48	24	36	8322	9931
	MDV	54	24	36	8478	10049
	MEV	60	24	36	8634	10167
	MFV	66	24	36	8789	10287
	MGV	72	24	36	8941	10414
	MHV	78	24	36	9097	10693
	MIV	84	24	36	9632	11151
	MJV	90	24	36	9890	11560
	MKV	96	24	36	10087	11705
	MLV	102	24	36	10767	12349
	MMV	108	24	36	10968	12506
	MNV	114	24	36	11168	12663
	MOV	120	24	36	11367	12821
30"d tables	MC0	48	30	36	8748	10357
	MD0	54	30	36	8904	10475
	ME0	60	30	36	9059	10595
	MF0	66	30	36	9217	10712
	MG0	72	30	36	9367	10841
	MH0	78	30	36	9526	10949
	MI0	84	30	36	10056	11577
	MJ0	90	30	36	10401	12072
	MK0	96	30	36	10599	12217
	ML0	102	30	36	11279	12862
	MM0	108	30	36	11479	13017
	MN0	114	30	36	11677	13174
	MO0	120	30	36	11878	13332

specification codes example: BPS-SKU-CCSQ000

series	sku	base	corner	power
blueprint B P S -	-	CC block C C	SQ square S Q	surface mount - pgs 90-92 000 none or undermount - pgs 86 - 89

material/finish code example: OAK 805 PLL 805

base material	base finish	top material	top finish
OAK oak WLT walnut	see page 4	PLL solid laminate WGL woodgrain laminate OAK oak WLT walnut	see pages 3 - 4

42''h block stepped table

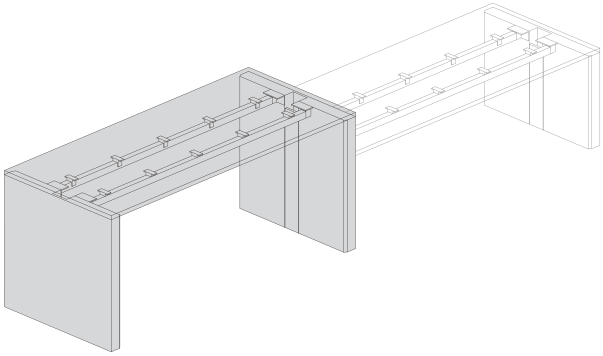

block 42''h to 30''h stepped table

- **42''h step tables only connect to 30''h tables**
- 48''h deep tops are not available at 42'' high
- block bases are mounted flush with both short ends of the top
- block stepped tables must be specified with additional 30''h block endrun tables with block stepped connection

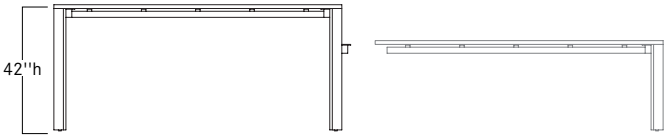

Block stepped tables only connect
to 30''h block endrun tables

	sku	w	d	h	**PLL** solid **WGL** woodgrain	**OAK** oak **WLT** walnut
36"d tables	NCA	48	36	42	9002	10612
	NDA	54	36	42	9160	10731
	NEA	60	36	42	9315	10852
	NFA	66	36	42	9473	10968
	NGA	72	36	42	9623	11097
	NHA	78	36	42	9779	11206
	NIA	84	36	42	10313	11832
	NJA	90	36	42	10742	12413
	NKA	96	36	42	10939	12559
	NLA	102	36	42	11620	13200
	NMA	108	36	42	11821	13360
	NNA	114	36	42	12021	13516
	NOA	120	36	42	12219	13674
42"d tables	NDB	54	42	42	9400	10986
	NEB	60	42	42	9571	11105
	NFB	66	42	42	9726	11224
	NGB	72	42	42	9879	11352
	NHB	78	42	42	10035	11462
	NIB	84	42	42	10568	12088
	NJB	90	42	42	11254	12924
	NKB	96	42	42	11451	13068
	NLB	102	42	42	12131	13715
	NMB	108	42	42	12332	13870
	NNB	114	42	42	12531	14028
	NOB	120	42	42	12731	14185

specification codes example: BPS-SKU-CCSQ000

series	sku	base	corner	power
blueprint B P S -	-	CC block C C	SQ square S Q	surface mount - pgs 90-92 mediatrac1 - pgs 94-106 000 none or undermount - pgs 86 - 89

material/finish code example: OAK 805 PLL 805

base material	base finish	top material	top finish
OAK oak WLT walnut	see page 4	PLL solid laminate WGL woodgrain laminate OAK oak WLT walnut	see pages 3 - 4

42''h narrow block stepped table

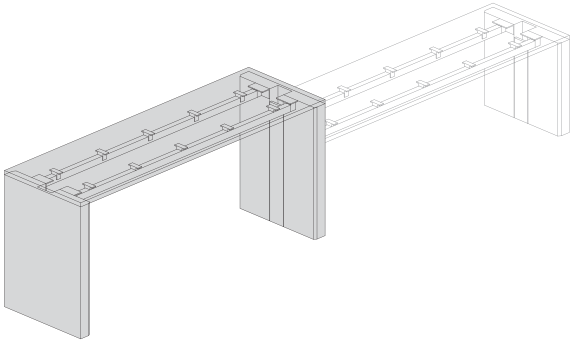

narrow block 42''h to 30''h stepped table

- **42''h step tables only connect to 30''h tables**
- 48''h deep tops are not available at 42'' high
- narrow block bases are mounted flush with both short ends of the top
- **narrow block stepped tables must be specified with additional 30''h narrow block endrun tables with narrow block stepped connection**

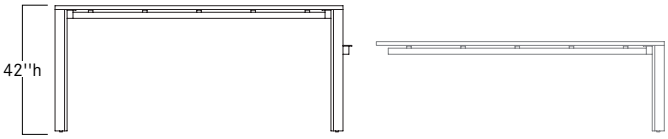

Narrow block stepped tables only connect to 30''h narrow block endrun tables

	sku	w	d	h	PLL solid WGL woodgrain	OAK oak WLT walnut
24"d tables	NCV	48	24	42	8494	9381
	NDV	54	24	42	8648	9501
	NEV	60	24	42	8803	10340
	NFV	66	24	42	8961	10457
	NGV	72	24	42	9112	10585
	NHV	78	24	42	9268	10864
	NIV	84	24	42	9803	11321
	NJV	90	24	42	10059	11730
	NKV	96	24	42	10257	11875
	NLV	102	24	42	10938	12518
	NMV	108	24	42	11141	12676
	NNV	114	24	42	11337	12834
	NOV	120	24	42	11540	12990
30"d tables	NC0	48	30	42	8666	9553
	ND0	54	30	42	8820	9672
	NE0	60	30	42	9059	10595
	NF0	66	30	42	9217	10712
	NG0	72	30	42	9367	10841
	NH0	78	30	42	9526	10949
	NI0	84	30	42	10056	11577
	NJ0	90	30	42	10401	12072
	NK0	96	30	42	10599	12217
	NL0	102	30	42	11279	12862
	NM0	108	30	42	11479	13017
	NN0	114	30	42	11677	13174
	NO0	120	30	42	11878	13332

specification codes example: BPS-SKU-CCSQ000

series	sku	base	corner	power
blueprint B P S -	-	CC block C C	SQ square S Q	surface mount - pgs 90-92 000 none or undermount - pgs 86 - 89

material/finish code example: OAK 805 PLL 805

base material	base finish	top material	top finish
OAK oak WLT walnut	see page 4	PLL solid laminate WGL woodgrain laminate OAK oak WLT walnut	see pages 3 - 4

30''h block endrun table

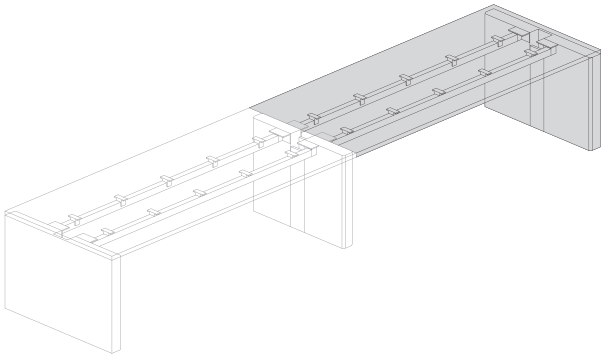

block base with block connection

- block base endrun tables with block connection must be specified with additional block base starter tables

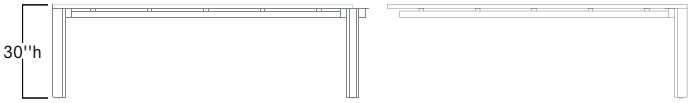

Endrun block connection connects to block starter tables

	sku	w	d	h	TC block connection: PLL solid, WGL woodgrain	TC block connection: OAK oak, WLT walnut
36"d tables	JCA	48	36	30	5252	6860
	JDA	54	36	30	5410	6980
	JEA	60	36	30	5564	7101
	JFA	66	36	30	5722	7218
	JGA	72	36	30	5873	7346
	JHA	78	36	30	6029	7456
	JIA	84	36	30	6565	8082
	JJA	90	36	30	6993	8664
	JKA	96	36	30	7191	8809
	JLA	102	36	30	7871	9452
	JMA	108	36	30	8072	9607
	JNA	114	36	30	8268	9764
42"d tables	JDB	54	42	30	5579	7152
	JEB	60	42	30	5738	7270
	JFB	66	42	30	5890	7391
	JGB	72	42	30	6041	7515
	JHB	78	42	30	6200	7625
	JIB	84	42	30	6736	8253
	JJB	90	42	30	7418	9089
	JKB	96	42	30	7616	9233
	JLB	102	42	30	8295	9879
	JMB	108	42	30	8496	10034
	JNB	114	42	30	8693	10192
48"d tables	JEC	60	48	30	5904	7448
	JFC	66	48	30	6062	7559
	JGC	72	48	30	6214	7686
	JHC	78	48	30	6369	7796
	JIC	84	48	30	6905	8424
	JJC	90	48	30	7585	9258
	JKC	96	48	30	7786	9403
	JLC	102	48	30	8467	10049
	JMC	108	48	30	8669	10203
	JNC	114	48	30	8867	10360

specification codes example: BPS-SKU-UCSQ000

series	sku	connecting base	corner	power
blueprint		TC block connection	SQ square	surface mount - pgs 90-92 mediatrac1 - pgs 94-106 000 none or undermount - pgs 86 - 89
B P S -	-	T C	S Q	

material/finish code example: OAK 805 PLL 805

base material	base finish	top material	top finish
OAK oak WLT walnut	see page 4	PLL solid laminate WGL woodgrain laminate OAK oak WLT walnut	see page 3 - 4

30''h narrow block endrun table

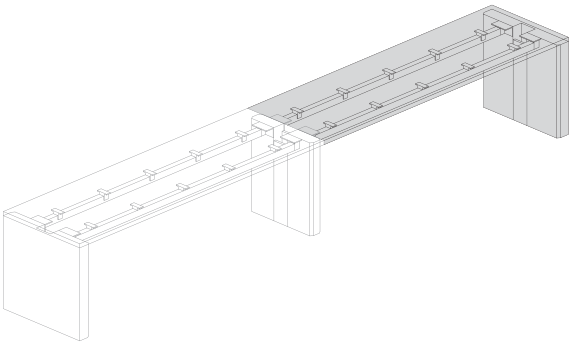

narrow block base with block connection

- block base endrun tables with block connection must be specified with additional block base starter tables

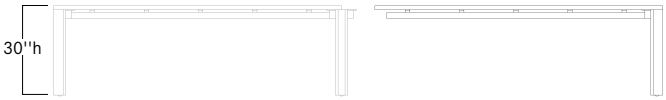

Endrun narrow block connection connects to narrow block starter tables

	sku	w	d	h	TC block connection: PLL solid, WGL woodgrain	TC block connection: OAK oak, WLT walnut
24"d tables	JCV	48	24	30	4912	6519
	JDV	54	24	30	5068	6639
	JEV	60	24	30	5223	6756
	JFV	66	24	30	5380	6877
	JGV	72	24	30	5532	7006
	JHV	78	24	30	5687	7284
	JIV	84	24	30	6221	7741
	JJV	90	24	30	6481	8152
	JKV	96	24	30	6677	8295
	JLV	102	24	30	7360	8939
	JMV	108	24	30	7559	9094
	JNV	114	24	30	7759	9254
30"d tables	JC0	48	30	30	5085	6691
	JD0	54	30	30	5239	6809
	JE0	60	30	30	5393	6925
	JF0	66	30	30	5552	7049
	JG0	72	30	30	5703	7174
	JH0	78	30	30	5857	7284
	JI0	84	30	30	6396	7911
	JJ0	90	30	30	6737	8409
	JK0	96	30	30	6935	8552
	JL0	102	30	30	7613	9195
	JM0	108	30	30	7816	9350
	JN0	114	30	30	8013	9509

specification codes example: BPS-SKU-UCSQ000

series	sku	connecting base	corner	power
blueprint		TC block connection	SQ square	surface mount - pgs 90-92 000 none or undermount - pgs 86 - 89
B P S -	-	T C	S Q	

material/finish code example: OAK 805 PLL 805

base material	base finish	top material	top finish
OAK oak WLT walnut	see page 4	PLL solid laminate WGL woodgrain laminate OAK oak WLT walnut	see page 3 - 4

36''h block endrun table

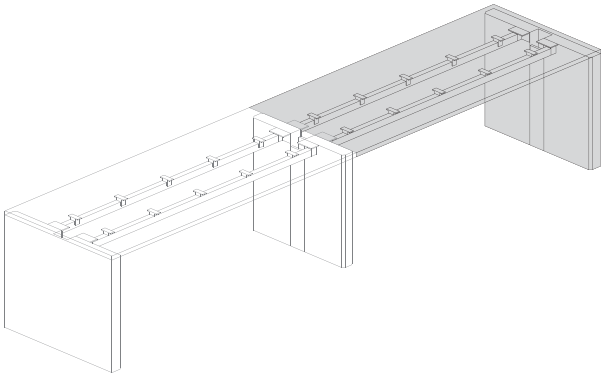

block base with block connection

- block base endrun tables with block connection must be specified with additional block base starter tables

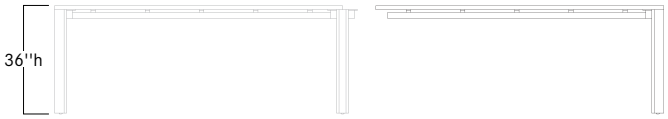

Endrun block connection connects to block starter tables

	sku	w	d	h	TC block connection: PLL solid, WGL woodgrain	TC block connection: OAK oak, WLT walnut
36"d tables	KCA	48	36	36	5337	6947
	KDA	54	36	36	5495	7065
	KEA	60	36	36	5649	7183
	KFA	66	36	36	5807	7305
	KGA	72	36	36	5958	7431
	KHA	78	36	36	6111	7542
	KIA	84	36	36	6649	8167
	KJA	90	36	36	7077	8747
	KKA	96	36	36	7274	8892
	KLA	102	36	36	7956	9535
	KMA	108	36	36	8156	9693
	KNA	114	36	36	8355	9848
42"d tables	KDB	54	42	36	5664	7234
	KEB	60	42	36	5819	7358
	KFB	66	42	36	5976	7474
	KGB	72	42	36	6128	7601
	KHB	78	42	36	6286	7711
	KIB	84	42	36	6819	8338
	KJB	90	42	36	7504	9174
	KKB	96	42	36	7701	9319
	KLB	102	42	36	8381	9963
	KMB	108	42	36	8581	10117
	KNB	114	42	36	8780	10277
48"d tables	KEC	60	48	36	5990	7530
	KFC	66	48	36	6147	7645
	KGC	72	48	36	6299	7773
	KHC	78	48	36	6454	7881
	KIC	84	48	36	6991	8508
	KJC	90	48	36	7673	9346
	KKC	96	48	36	7872	9490
	KLC	102	48	36	8552	10134
	KMC	108	48	36	8752	10289
	KNC	114	48	36	8949	10448

specification codes example: BPS-SKU-UCSQ000

series	sku	connecting base	corner	power
blueprint B P S -	-	TC block connection T C	SQ square S Q	surface mount - pgs 90-92 mediatrac1 - pgs 94-106 000 none or undermount - pgs 86 - 89

material/finish code example: OAK 805 PLL 805

base material	base finish	top material	top finish
OAK oak WLT walnut	see page 4	PLL solid laminate WGL woodgrain laminate OAK oak WLT walnut	see page 3 - 4

36''h narrow block endrun table

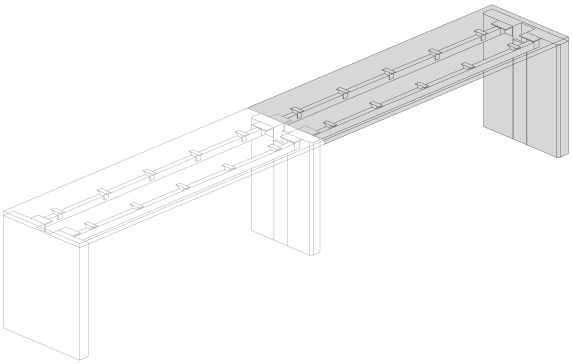

narrow block base with block connection

- narrow block base endrun tables with block connection must be specified with additional narrow block base starter tables

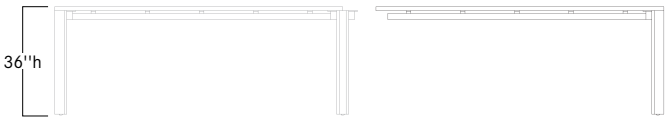

Endrun narrow block connection connects to narrow block starter tables

	sku	w	d	h	TC block connection: PLL solid, WGL woodgrain	TC block connection: OAK oak, WLT walnut
24"d tables	KCV	48	24	36	4999	6606
	KDV	54	24	36	5154	6723
	KEV	60	24	36	5308	6845
	KFV	66	24	36	5466	6962
	KGV	72	24	36	5617	7090
	KHV	78	24	36	5775	7367
	KIV	84	24	36	6309	7824
	KJV	90	24	36	6566	8236
	KKV	96	24	36	6765	8381
	KLV	102	24	36	7445	9023
	KMV	108	24	36	7645	9181
	KNV	114	24	36	7842	9341
30"d tables	KC0	48	30	36	5167	6776
	KD0	54	30	36	5325	6895
	KE0	60	30	36	5819	7358
	KF0	66	30	36	5976	7474
	KG0	72	30	36	6128	7601
	KH0	78	30	36	6286	7711
	KI0	84	30	36	6819	8338
	KJ0	90	30	36	7504	9174
	KK0	96	30	36	7701	9319
	KL0	102	30	36	8381	9963
	KM0	108	30	36	8581	10117
	KN0	114	30	36	8780	10277

specification codes example: BPS-SKU-UCSQ000

series	sku	connecting base	corner	power
blueprint		TC block connection	SQ square	surface mount - pgs 90-92 000 none or undermount - pgs 86 - 89
B P S -	-	T C	S Q	

material/finish code example: OAK 805 PLL 805

base material	base finish	top material	top finish
OAK oak WLT walnut	see page 4	PLL solid laminate WGL woodgrain laminate OAK oak WLT walnut	see page 3 - 4

42''h block endrun table

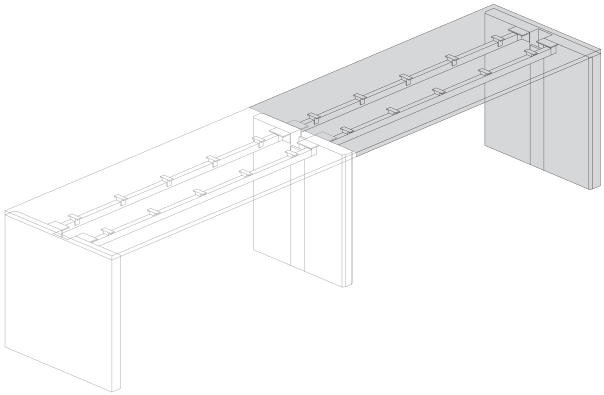

block base with block connection

- block base endrun tables with block connection must be specified with additional block base starter tables

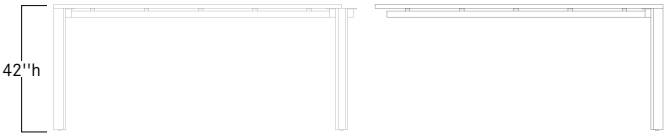

Endrun block connection connects to block starter tables

	sku	w	d	h	specifications	TC block connection: PLL solid, WGL woodgrain	TC block connection: OAK oak, WLT walnut
36"d tables	LCA	48	36	42		5426	7032
	LDA	54	36	42		5579	7152
	LEA	60	36	42		5738	7270
	LFA	66	36	42		5891	7391
	LGA	72	36	42		6041	7515
	LHA	78	36	42		6200	7625
	LIA	84	36	42		6736	8253
	LJA	90	36	42		7162	8834
	LKA	96	36	42		7361	8977
	LLA	102	36	42		8040	9622
	LMA	108	36	42		8242	9778
	LNA	114	36	42		8439	9935
42"d tables	LDB	54	42	42		5750	7321
	LEB	60	42	42		5904	7440
	LFB	66	42	42		6062	7559
	LGB	72	42	42		6214	7686
	LHB	78	42	42		6369	7796
	LIB	84	42	42		6905	8424
	LJB	90	42	42		7585	9258
	LKB	96	42	42		7786	9402
	LLB	102	42	42		8467	10049
	LMB	108	42	42		8669	10203
	LNB	114	42	42		8867	10361

specification codes example: BPS-SKU-UCSQ000

series	sku	connecting base	corner	power
blueprint B P S -	-	TC block connection T C	SQ square S Q	surface mount - pgs 90-92 mediatrac1 - pgs 94-106 000 none or undermount - pgs 86 - 89

material/finish code example: OAK 805 PLL 805

base material	base finish	top material	top finish
OAK oak WLT walnut	see page 4	PLL solid laminate WGL woodgrain laminate OAK oak WLT walnut	see page 3 - 4

42''h narrow block endrun table

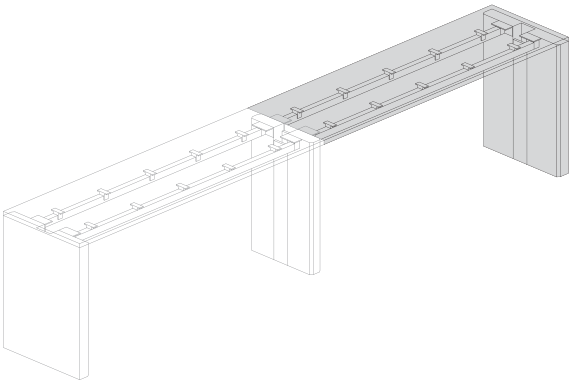

narrow block base with block connection

- narrow block base endrun tables with block connection must be specified with additional narrow block base starter tables

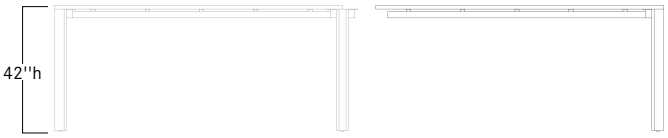

Endrun narrow block connection connects to narrow block starter tables

	sku	w	d	h	specifications	TC block connecion: PLL solid, WGL woodgrain	TC block connecion: OAK oak, WLT walnut
24"d tables	LCV	48	24	42		5086	6691
	LDV	54	24	42		5240	6774
	LEV	60	24	42		5393	6925
	LFV	66	24	42		5552	7049
	LGV	72	24	42		5703	7174
	LHV	78	24	42		5857	7455
	LIV	84	24	42		6396	7911
	LJV	90	24	42		6650	8321
	LKV	96	24	42		6848	8467
	LLV	102	24	42		7528	9111
	LMV	108	24	42		7730	9267
	LNV	114	24	42		7928	9424
30"d tables	LC0	48	30	42		5325	6931
	LD0	54	30	42		5479	7013
	LE0	60	30	42		5564	7101
	LF0	66	30	42		5722	7218
	LG0	72	30	42		5873	7346
	LH0	78	30	42		6029	7456
	LI0	84	30	42		6565	8082
	LJ0	90	30	42		6907	8578
	LK0	96	30	42		7104	8723
	LL0	102	30	42		7783	9366
	LM0	108	30	42		7985	9521
	LN0	114	30	42		8183	9678

specification codes example: BPS-SKU-UCSQ000

series	sku	connecting base	corner	power
blueprint B P S -	-	TC block connection T C	SQ square S Q	surface mount - pgs 90-92 000 none or undermount - pgs 86 - 89

material/finish code example: OAK 805 PLL 805

base material	base finish	top material	top finish
OAK oak WLT walnut	see page 4	PLL solid laminate WGL woodgrain laminate OAK oak WLT walnut	see page 3 - 4

30''h block endrun table

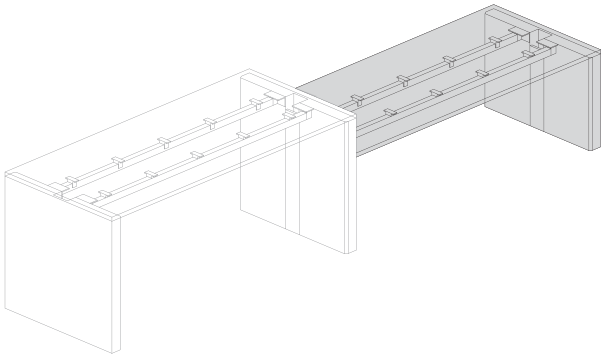

block base for block stepped connection

- block base endrun tables for block stepped connection must be specified with additional 36''h or 42''h block stepped table

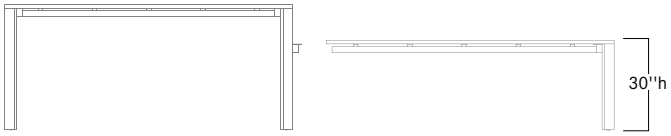

Endrun block stepped connection only connects to 36''h or 42''h block stepped table

	sku	w	d	h	specifications	UC stepped connection: PLL solid, WGL woodgrain	UC stepped connection: OAK oak, WLT walnut
36"d tables	JCA	48	36	30		5252	6860
	JDA	54	36	30		5410	6980
	JEA	60	36	30		5564	7101
	JFA	66	36	30		5722	7218
	JGA	72	36	30		5873	7346
	JHA	78	36	30		6029	7456
	JIA	84	36	30		6565	8082
	JJA	90	36	30		6993	8664
	JKA	96	36	30		7191	8809
	JLA	102	36	30		7871	9452
	JMA	108	36	30		8072	9607
	JNA	114	36	30		8268	9764
42"d tables	JDB	54	42	30		5579	7152
	JEB	60	42	30		5738	7270
	JFB	66	42	30		5890	7391
	JGB	72	42	30		6041	7515
	JHB	78	42	30		6200	7625
	JIB	84	42	30		6736	8253
	JJB	90	42	30		7418	9089
	JKB	96	42	30		7616	9233
	JLB	102	42	30		8295	9879
	JMB	108	42	30		8496	10034
	JNB	114	42	30		8693	10192
48"d tables	JEC	60	48	30	only connects to block 36"h stepped table	5904	7448
	JFC	66	48	30	only connects to block 36"h stepped table	6062	7559
	JGC	72	48	30	only connects to block 36"h stepped table	6214	7686
	JHC	78	48	30	only connects to block 36"h stepped table	6369	7796
	JIC	84	48	30	only connects to block 36"h stepped table	6905	8424
	JJC	90	48	30	only connects to block 36"h stepped table	7585	9258
	JKC	96	48	30	only connects to block 36"h stepped table	7786	9403
	JLC	102	48	30	only connects to block 36"h stepped table	8467	10049
	JMC	108	48	30	only connects to block 36"h stepped table	8669	10203
	JNC	114	48	30	only connects to block 36"h stepped table	8867	10360

specification codes example: BPS-SKU-UCSQ000

series	sku	connecting base	corner	power
blueprint B P S -	-	UC block connection U C	SQ square S Q	surface mount - pgs 90-92 mediatrac1 - pgs 94-106 000 none or undermount - pgs 86 - 89

material/finish code example: OAK 805 PLL 805

base material	base finish	top material	top finish
OAK oak WLT walnut	see page 4	PLL solid laminate WGL woodgrain laminate OAK oak WLT walnut	see page 3 - 4

30''h narrow block endrun table

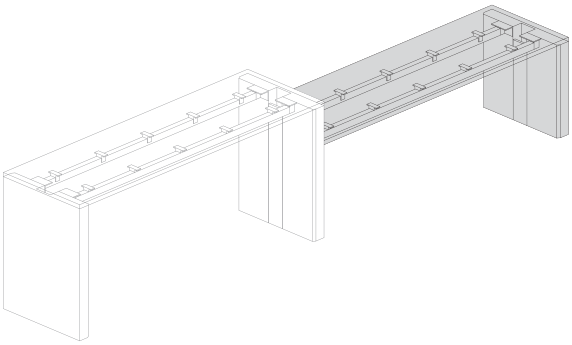

narrow block base for block stepped connection

- narrow block base endrun tables for block stepped connection must be specified with additional 36”h or 42”h narrow block stepped table

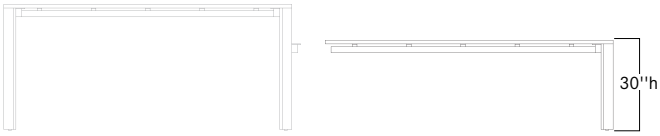

Endrun narrow block stepped connection only connects to 36”h and 42”h narrow block stepped table

	sku	w	d	h	TU stepped connection	
					PLL solid WGL woodgrain	OAK oak WLT walnut
24"d tables	JCV	48	24	30	4912	6519
	JDV	54	24	30	5068	6639
	JEV	60	24	30	5223	6756
	JFV	66	24	30	5380	6877
	JGV	72	24	30	5532	7006
	JHV	78	24	30	5687	7284
	JIV	84	24	30	6221	7741
	JJV	90	24	30	6481	8152
	JKV	96	24	30	6677	8295
	JLV	102	24	30	7360	8939
	JMV	108	24	30	7559	9094
	JNV	114	24	30	7759	9254
30"d tables	JC0	48	30	30	5085	6691
	JD0	54	30	30	5239	6809
	JE0	60	30	30	5393	6925
	JF0	66	30	30	5552	7049
	JG0	72	30	30	5703	7174
	JH0	78	30	30	5857	7284
	JI0	84	30	30	6396	7911
	JJ0	90	30	30	6737	8409
	JK0	96	30	30	6935	8552
	JL0	102	30	30	7613	9195
	JM0	108	30	30	7816	9350
	JN0	114	30	30	8013	9509

specification codes example: BPS-SKU-UCSQ000

series	sku	connecting base	corner	power
blueprint B P S -	-	UC block stepped connection U C	SQ square S Q	surface mount - pgs 90-92 000 none or undermount - pgs 86 - 89

material/finish code example: OAK 805 PLL 805

base material	base finish	top material	top finish
OAK oak WLT walnut	see page 4	PLL solid laminate WGL woodgrain laminate OAK oak WLT walnut	see page 3 - 4

30''h frame runoff table

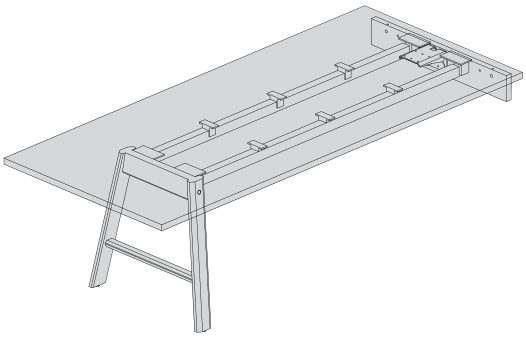

frame base with wall mount connection

- 20'' overhang on free ends of all 30''h tables
- **only connects to wall using a rail system.**

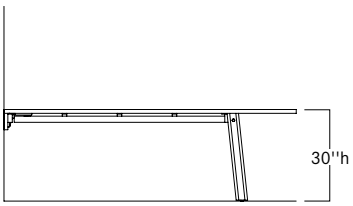

Runoff wall mount connection only
connects to wall using a rail system

	sku	w	d	h	**WA** wall mount connection	
					PLL solid **WGL** woodgrain	**OAK** oak **WLT** walnut
36"d tables	JEA	60	36	30	4511	6046
	JFA	66	36	30	4668	6165
	JGA	72	36	30	4819	6293
	JHA	78	36	30	4974	6401
	JIA	84	36	30	5510	7028
	JJA	90	36	30	5938	7606
	JKA	96	36	30	6137	7754
	JLA	102	36	30	6816	8398
	JMA	108	36	30	7017	8555
	JNA	114	36	30	7217	8710
	JOA	120	36	30	7415	8869
42"d tables	JEB	60	42	30	4596	6129
	JFB	66	42	30	4752	6250
	JGB	72	42	30	4905	6377
	JHB	78	42	30	5062	6487
	JIB	84	42	30	5593	7113
	JJB	90	42	30	6280	7949
	JKB	96	42	30	6477	8094
	JLB	102	42	30	7158	8740
	JMB	108	42	30	7359	8895
	JNB	114	42	30	7557	9052
	JOB	120	42	30	7757	9210
48"d tables	JFC	66	48	30	4836	6336
	JGC	72	48	30	4990	6463
	JHC	78	48	30	5146	6572
	JIC	84	48	30	5683	7198
	JJC	90	48	30	6365	8037
	JKC	96	48	30	6563	8182
	JLC	102	48	30	7244	8821
	JMC	108	48	30	7441	8981
	JNC	114	48	30	7640	9139
	JOC	120	48	30	7842	9295

specification codes example: BPS-SKU-WASQ000

series	sku	base	corner	power
blueprint B P S -	-	WA wall mount connection W A	SQ square S Q	surface mount - pgs 90-92 mediatrac1 - pgs 94-106 000 none or undermount - pgs 86 - 89

material/finish code example: OAK 805 PLL 805

base material	base finish	top material	top finish
OAK oak WLT walnut	see page 4	PLL solid laminate WGL woodgrain laminate OAK oak WLT walnut	see page 3 - 4

36''h frame runoff table

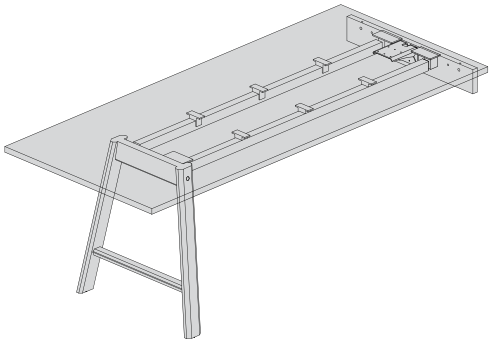

frame base with wall mount connection

- 60''w - 90''w has a 10'' overhang, 96''w - 120''w has a 20'' overhang
- **only connects to wall using a rail system.**

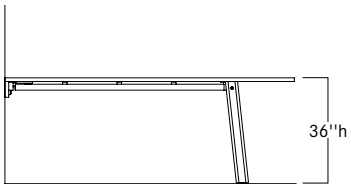

Runoff wall mount connection only
connects to wall using a rail system

	sku	w	d	h	**WA** wall mount connection	
					PLL solid **WGL** woodgrain	**OAK** oak **WLT** walnut
36"d tables	KEA	60	36	36	4681	6216
	KFA	66	36	36	4839	6336
	KGA	72	36	36	4990	6463
	KHA	78	36	36	5146	6572
	KIA	84	36	36	5683	7198
	KJA	90	36	36	6109	7781
	KKA	96	36	36	6308	7925
	KLA	102	36	36	6986	8568
	KMA	108	36	36	7190	8724
	KNA	114	36	36	7386	8882
	KOA	120	36	36	7585	9040
42"d tables	KEB	60	42	36	4765	6300
	KFB	66	42	36	4923	6422
	KGB	72	42	36	5074	6546
	KHB	78	42	36	5231	6656
	KIB	84	42	36	5766	7285
	KJB	90	42	36	6449	8118
	KKB	96	42	36	6648	8261
	KLB	102	42	36	7328	8909
	KMB	108	42	36	7529	9066
	KNB	114	42	36	7728	9222
	KOB	120	42	36	7928	9380
48"d tables	KFC	66	48	36	5008	6506
	KGC	72	48	36	5162	6635
	KHC	78	48	36	5315	6743
	KIC	84	48	36	5853	7372
	KJC	90	48	36	6535	8204
	KKC	96	48	36	6733	8350
	KLC	102	48	36	7412	8995
	KMC	108	48	36	7613	9150
	KNC	114	48	36	7812	9310
	KOC	120	48	36	8013	9465

specification codes example: BPS-SKU-WASQ000

series	sku	base	corner	power
blueprint B P S -	-	WA wall mount connection W A	SQ square S Q	surface mount - pgs 90-92 mediatrac1 - pgs 94-106 000 none or undermount - pgs 86 - 89

material/finish code example: OAK 805 PLL 805

base material	base finish	top material	top finish
OAK oak WLT walnut	see page 4	PLL solid laminate WGL woodgrain laminate OAK oak WLT walnut	see page 3 - 4

42''h frame runoff table

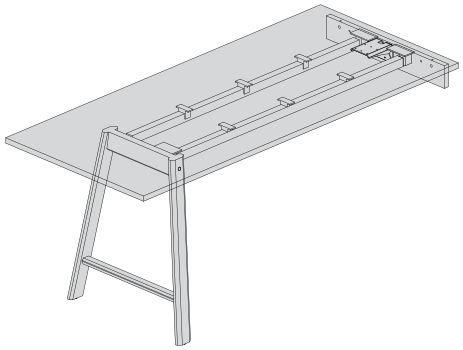

frame base with wall mount connection

- 60''w - 90''w has a 10'' overhang, 96''w - 120''w has a 20'' overhang
- **only connects to wall using a rail system.**

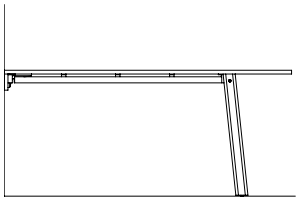

Runoff wall mount connection only
connects to wall using a rail system

	sku	w	d	h	**WA** wall mount connection	
					PLL solid **WGL** woodgrain	**OAK** oak **WLT** walnut
36"d tables	LEA	60	36	42	4765	6300
	LFA	66	36	42	4924	6422
	LGA	72	36	42	5074	6546
	LHA	78	36	42	5231	6656
	LIA	84	36	42	5766	7285
	LJA	90	36	42	6194	7865
	LKA	96	36	42	6392	8010
	LLA	102	36	42	7072	8654
	LMA	108	36	42	7273	8809
	LNA	114	36	42	7470	8967
	LOA	120	36	42	7673	9124
42"d tables	LEB	60	42	42	4852	6385
	LFB	66	42	42	5008	6506
	LGB	72	42	42	5162	6632
	LHB	78	42	42	5315	6741
	LIB	84	42	42	5853	7372
	LJB	90	42	42	6535	8204
	LKB	96	42	42	6733	8350
	LLB	102	42	42	7412	8995
	LMB	108	42	42	7613	9150
	LNB	114	42	42	7812	9310
	LOB	120	42	42	8013	9465

specification codes example: BPS-SKU-WASQ000

series	sku	base	corner	power
blueprint B P S -	-	WA wall mount connection W A	SQ square RR 3½'' radius **upcharge $150** S Q	surface mount - pgs 90-92 mediatrac1 - pgs 94-106 000 none or undermount - pgs 86 - 89

material/finish code example: OAK 805 PLL 805

base material	base finish	top material	top finish
OAK oak WLT walnut	see page 4	PLL solid laminate WGL woodgrain laminate OAK oak WLT walnut	see page 3 - 4

30''h block runoff table

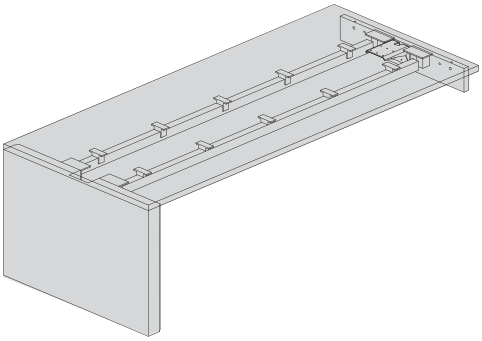

block base with wall mount connection

- **only connects to wall using a rail system.**

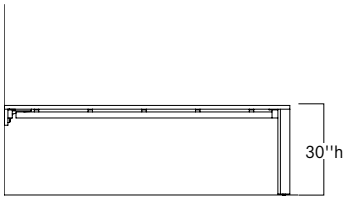

Runoff wall mount connection only
connects to wall using a rail system

	sku	w	d	h	WC wall mount connection: PLL solid, WGL woodgrain	WC wall mount connection: OAK oak, WLT walnut
36"d tables	JCA	48	36	30	5989	7598
	JDA	54	36	30	6145	7715
	JEA	60	36	30	6300	7838
	JFA	66	36	30	6458	7955
	JGA	72	36	30	6610	8084
	JHA	78	36	30	6766	8193
	JIA	84	36	30	7301	8818
	JJA	90	36	30	7729	9400
	JKA	96	36	30	7926	9546
	JLA	102	36	30	8607	10188
	JMA	108	36	30	8807	10345
	JNA	114	36	30	9004	10501
42"d tables	JDB	54	42	30	6314	7889
	JEB	60	42	30	6473	8006
	JFB	66	42	30	6626	8127
	JGB	72	42	30	6779	8253
	JHB	78	42	30	6937	8362
	JIB	84	42	30	7470	8988
	JJB	90	42	30	8155	9826
	JKB	96	42	30	8352	9970
	JLB	102	42	30	9033	10617
	JMB	108	42	30	9233	10769
	JNB	114	42	30	9430	10929
48"d tables	JEC	60	48	30	6641	8184
	JFC	66	48	30	6798	8295
	JGC	72	48	30	6950	8423
	JHC	78	48	30	7105	8532
	JIC	84	48	30	7640	9160
	JJC	90	48	30	8323	9996
	JKC	96	48	30	8523	10141
	JLC	102	48	30	9204	10786
	JMC	108	48	30	9404	10939
	JNC	114	48	30	9602	11097

specification codes example: BPS-SKU-WCSQ000

series	sku	base	corner	power
blueprint B P S -	-	WC wall mount connection W C	SQ square S Q	surface mount - pgs 90-92 mediatrac1 - pgs 94-106 000 none or undermount - pgs 86 - 89

material/finish code example: OAK 805 PLL 805

base material	base finish	top material	top finish
OAK oak WLT walnut	see page 4	PLL solid laminate WGL woodgrain laminate OAK oak WLT walnut	see page 3 - 4

36''h block runoff table

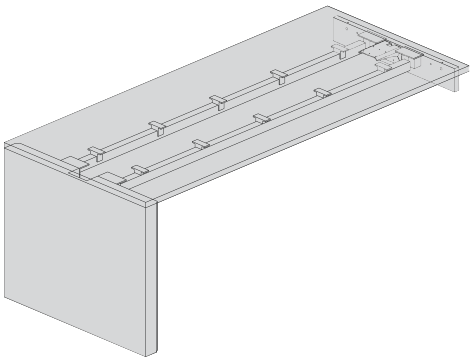

block base with wall mount connection

- **only connects to wall using a rail system**

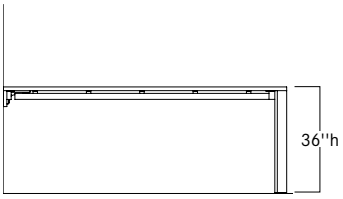

Runoff wall mount connection only
connects to wall using a rail system

	sku	w	d	h	**WC** mediawall mount connection	
					PLL solid **WGL** woodgrain	**OAK** oak **WLT** walnut
36"d tables	KCA	48	36	36	6073	7684
	KDA	54	36	36	6231	7802
	KEA	60	36	36	6385	7920
	KFA	66	36	36	6543	8041
	KGA	72	36	36	6694	8167
	KHA	78	36	36	6848	8279
	KIA	84	36	36	7386	8905
	KJA	90	36	36	7814	9483
	KKA	96	36	36	8012	9629
	KLA	102	36	36	8692	10273
	KMA	108	36	36	8892	10430
	KNA	114	36	36	9091	10585
42"d tables	KDB	54	42	36	6401	7971
	KEB	60	42	36	6555	8093
	KFB	66	42	36	6712	8210
	KGB	72	42	36	6865	8338
	KHB	78	42	36	7022	8449
	KIB	84	42	36	7557	9075
	KJB	90	42	36	8240	9910
	KKB	96	42	36	8437	10054
	KLB	102	42	36	9117	10699
	KMB	108	42	36	9319	10855
	KNB	114	42	36	9517	11013
48"d tables	KEC	60	48	36	6726	8267
	KFC	66	48	36	6884	8381
	KGC	72	48	36	7035	8508
	KHC	78	48	36	7192	8617
	KIC	84	48	36	7728	9246
	KJC	90	48	36	8410	10081
	KKC	96	48	36	8609	10225
	KLC	102	48	36	9288	10871
	KMC	108	48	36	9490	11026
	KNC	114	48	36	9686	11183

specification codes example: BPS-SKU-WCSQ000

series	sku	base	corner	power
blueprint		WC wall mount connection	SQ square	surface mount - pgs 90-92 mediatrac1 - pgs 94-106 000 none or undermount - pgs 86 - 89
B P S -	-	W C	S Q	

material/finish code example: OAK 805 PLL 805

base material	base finish	top material	top finish
OAK oak WLT walnut	see page 4	PLL solid laminate WGL woodgrain laminate OAK oak WLT walnut	see page 3 - 4

42''h block runoff table

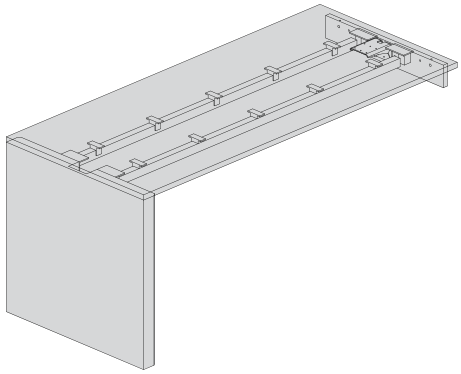

block base with wall mount connection

- **only connects to wall using a rail system.**

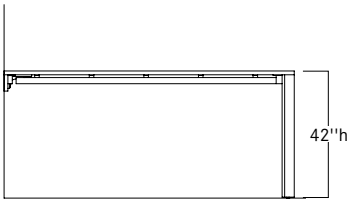

Runoff wall mount connection only
connects to wall using a rail system

	sku	w	d	h	**WC** block connection	
					PLL solid **WGL** woodgrain	**OAK** oak **WLT** walnut
36"d tables	LCA	48	36	42	6161	7768
	LDA	54	36	42	6314	7889
	LEA	60	36	42	6473	8006
	LFA	66	36	42	6628	8127
	LGA	72	36	42	6779	8253
	LHA	78	36	42	6937	8362
	LIA	84	36	42	7470	8988
	LJA	90	36	42	7898	9570
	LKA	96	36	42	8097	9713
	LLA	102	36	42	8777	10359
	LMA	108	36	42	8977	10515
	LNA	114	36	42	9177	10672
42"d tables	LDB	54	42	42	6487	8057
	LEB	60	42	42	6641	8177
	LFB	66	42	42	6798	8295
	LGB	72	42	42	6950	8423
	LHB	78	42	42	7105	8532
	LIB	84	42	42	7640	9160
	LJB	90	42	42	8323	9996
	LKB	96	42	42	8523	10140
	LLB	102	42	42	9204	10786
	LMB	108	42	42	9404	10939
	LNB	114	42	42	9602	11098

specification codes example: BPS-SKU-WCSQ000

series	sku	base	corner	power
blueprint B P S -	-	WC wall mount connection W C	SQ square S Q	surface mount - pgs 90-92 mediatrac1 - pgs 94-106 000 none or undermount - pgs 86 - 89

material/finish code example: OAK 805 PLL 805

base material	base finish	top material	top finish
OAK oak WLT walnut	see page 4	PLL solid laminate WGL woodgrain laminate OAK oak WLT walnut	see page 3 - 4

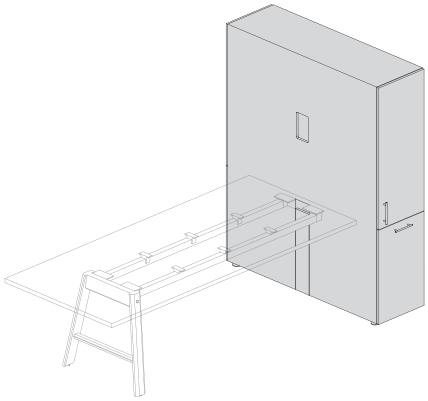

single-sided mediawall use with 30''h

- mediawalls must be specified with additional runoff tables with mediawall connection
- tables connect to only one side of the mediawall
- 30''h runoff tables connect to 73⅝''h mediawalls

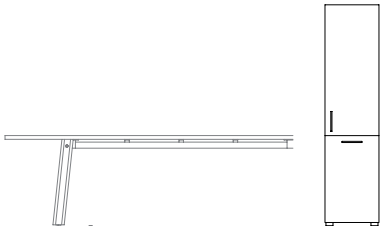

Single-sided mediawall connects to runoff tables on one side.

	sku	w	d	h	specifications	**OAK** oak **WLT** walnut
door/trash mediawall	SSG	18	60	73⅝	door/trash pedestal combination, use with 30"h runoff tables	12068
long door mediawall	SSI	18	60	73⅝	long door, use with 30"h runoff tables	11664

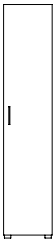

specification codes example: BPS-SKU-BN

series	**sku**	**pulls**
blueprint		BN brushed nickel BK matte black
B P S -	-	

material/finish code example: OAK 805

material	**finish**
OAK oak WLT walnut	see page 4

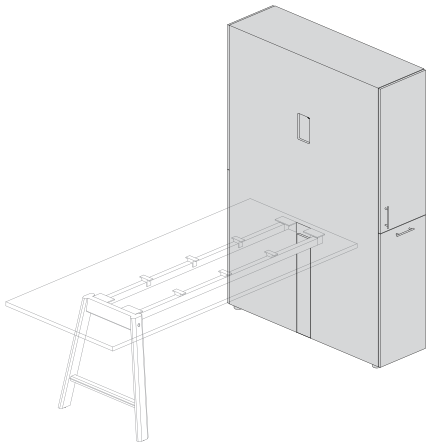

single-sided mediawall use with 36''h

- mediawalls must be specified with additional runoff tables with mediawall connection
- tables connect to only one side of the mediawall
- 36''h and 42''h runoff tables connect to 86½''h mediawalls

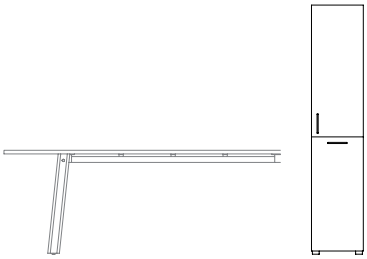

Single-sided mediawall connects to runoff tables on one side.

	sku	w	d	h	specifications	**OAK** oak **WLT** walnut
door/trash mediawall	WSA	18	60	86½	door/trash pedestal combination, use with 36"h runoff tables	12870
long door mediawall	WSC	18	60	86½	long door, use with 36"h runoff tables	12469

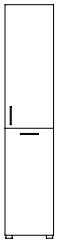

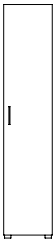

specification codes example: BPS-SKU-BN

series	**sku**	**pulls**
blueprint		BN brushed nickel BK matte black
B P S -	-	

material/finish code example: OAK 805

material	**finish**
OAK oak WLT walnut	see page 4

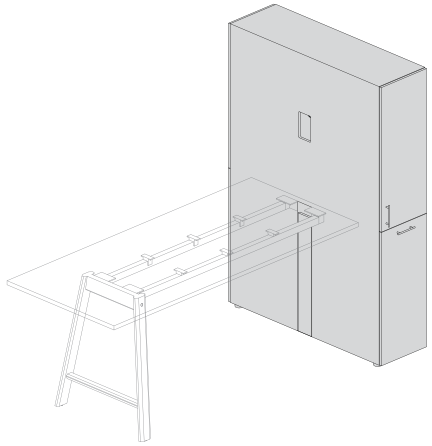

single-sided mediawall use with 42''h

- mediawalls must be specified with additional runoff tables with media wall connection
- tables connect to only one side of the mediawall
- 36''h and 42''h runoff tables connect to 86½''h mediawalls

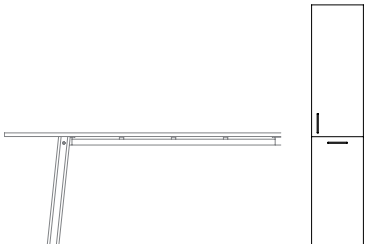

Single-sided mediawall connects to runoff tables on one side.

	sku	w	d	h	specifications	OAK oak WLT walnut
door/trash mediawall	WSD	18	60	86½	door/trash pedestal combination, use with 42"h runoff tables	12870
long door mediawall	WSF	18	60	86½	long door, use with 42"h runoff tables	12469

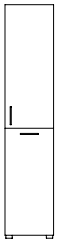

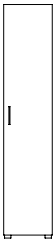

specification codes example: BPS-SKU-BN

series	sku	pulls
blueprint		BN brushed nickel BK matte black
B P S -	-	

material/finish code example: OAK 805

material	finish
OAK oak WLT walnut	see page 4

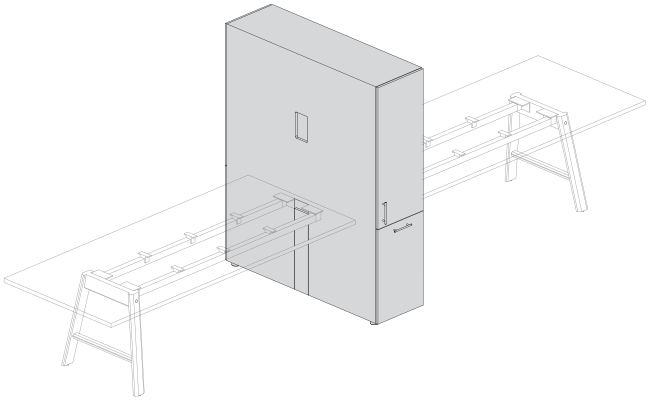

Single-sided mediawall connects to runoff tables on one side.

double-sided mediawall use with 30''h

- mediawalls must be specified with additional runoff tables with media wall connection
- tables connect to both sides of the mediawall
- 30''h runoff tables connect to 73⅝''h mediawall

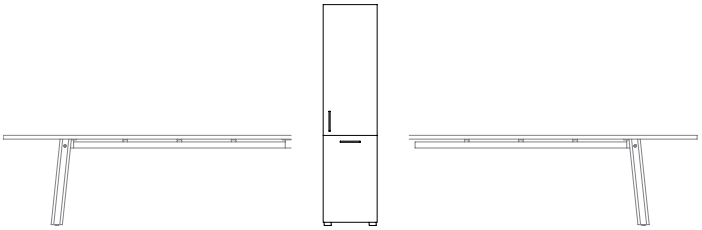

Double-sided mediawall connects to runoff tables on both sides.

	sku	w	d	h	specifications	**OAK** oak **WLT** walnut
door/trash mediawall	SDG	18	60	73⅝	door/trash pedestal combination, use with 30"h runoff tables	12068
long door mediawall	SDI	18	60	73⅝	long door, use with 30"h runoff tables	11664

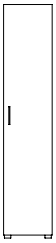

specification codes example: BPS-SKU-BN

series	**sku**	**pulls**
blueprint		BN brushed nickel BK matte black
B P S -	-	

material/finish code example: OAK 805

material	**finish**
OAK oak WLT walnut	see page 4

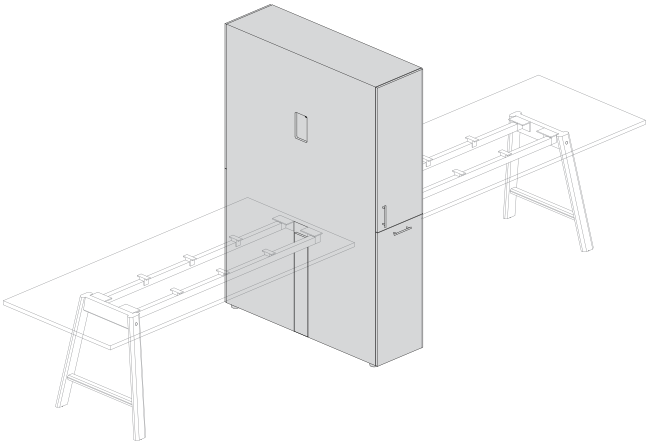

double-sided mediawall use with 36''h

- mediawalls must be specified with additional runoff tables with media wall connection
- tables connect to both sides of the mediawall
- 36''h and 42''h runoff tables connect to 86½''h mediawalls

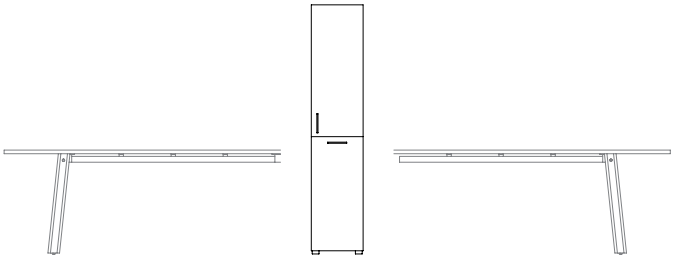

Double-sided mediawall connects to runoff tables on both sides.

	sku	w	d	h	specifications	**OAK** oak **WLT** walnut
door/trash mediawall	WDA	18	60	86½	door/trash pedestal combination, use with 36"h runoff tables	12870
long door mediawall	WDC	18	60	86½	long door, use with 36"h runoff tables	12469

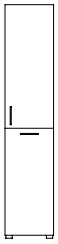

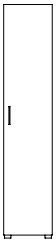

specification codes example: BPS-SKU-BN

series	**sku**	**pulls**
blueprint		BN brushed nickel BK matte black
B P S -	-	

material/finish code example: OAK 805

material	**finish**
OAK oak WLT walnut	see page 4

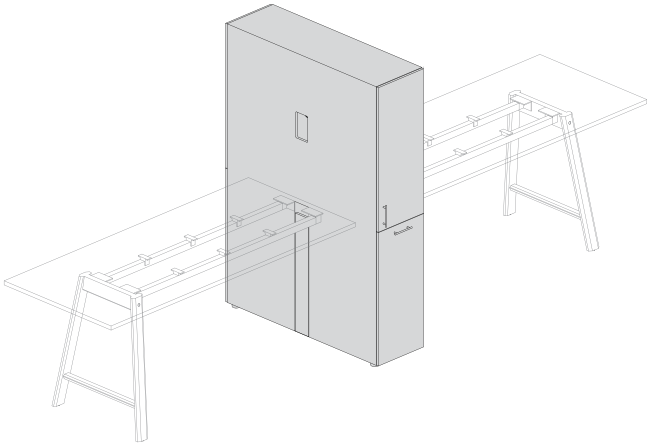

double-sided mediawall use with 42''h

- mediawalls must be specified with additional runoff tables with media wall connection
- tables connect to both sides of the mediawall
- 36''h and 42''h runoff tables connect to 86½''h mediawalls

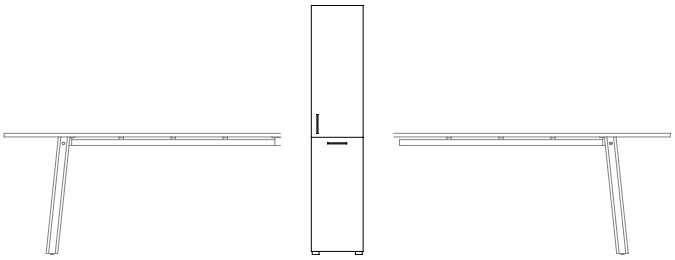

Double-sided mediawall connects to runoff tables on both sides.

	sku	w	d	h	specifications	**OAK** oak **WLT** walnut
door/trash mediawall	WDD	18	60	86½	door/trash pedestal combination, use with 42"h runoff tables	12870
long door mediawall	WDF	18	60	86½	long door, use with 42"h runoff tables	12469

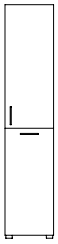

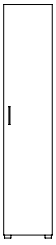

specification codes example: BPS-SKU-BN

series	**sku**	**pulls**
blueprint		BN brushed nickel BK matte black
B P S -	-	

material/finish code example: OAK 805

material	**finish**
OAK oak WLT walnut	see page 4

30''h frame runoff table

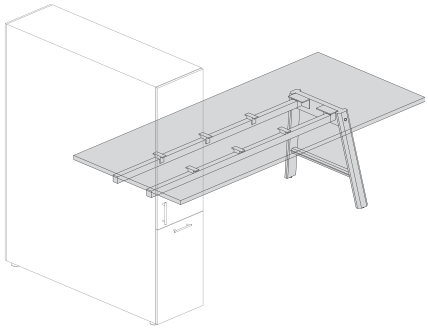

frame base with mediawall connection

- connects to single and double sided 73⅝''h mediawalls
- 20'' overhang on free ends of all 30''h tables
- frame base runoff tables with mediawall connection must be specified with single-sided or double-sided mediawall

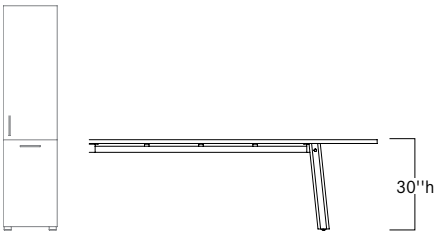

Runoff mediawall connection only connects to single-sided or double-sided mediawalls.

	sku	w	d	h	**RA** mediawall connection	
					PLL solid **WGL** woodgrain	**OAK** oak **WLT** walnut
36"d tables	JGA	72	36	30	4083	5556
	JHA	78	36	30	4237	5664
	JIA	84	36	30	4775	6293
	JJA	90	36	30	5202	6870
	JKA	96	36	30	5400	7017
	JLA	102	36	30	6080	7661
	JMA	108	36	30	6281	7817
	JNA	114	36	30	6480	7975
	JOA	120	36	30	6678	8131
42"d tables	JGB	72	42	30	4169	5643
	JHB	78	42	30	4324	5750
	JIB	84	42	30	4857	6376
	JJB	90	42	30	5543	7215
	JKB	96	42	30	5741	7359
	JLB	102	42	30	6422	8004
	JMB	108	42	30	6621	8158
	JNB	114	42	30	6819	8315
	JOB	120	42	30	7021	8473
48"d tables	JGC	72	48	30	4254	5725
	JHC	78	48	30	4411	5834
	JIC	84	48	30	4946	6463
	JJC	90	48	30	5629	7300
	JKC	96	48	30	5827	7445
	JLC	102	48	30	6507	8086
	JMC	108	48	30	6706	8244
	JNC	114	48	30	6905	8401
	JOC	120	48	30	7105	8559

specification codes example: **BPS-SKU-RASQ000**

series	sku	base	corner	grommet location
blueprint B P S -	-	RA mediawall connection R A	SQ square S Q	surface mount - pgs 90-92 mediatrac1 - pgs 94-106 000 none or undermount - pgs 86 - 89

material/finish code example: **OAK 805 PLL 805**

base material	base finish	top material	top finish
OAK oak WLT walnut	see page 4	PLL solid laminate WGL woodgrain laminate OAK oak WLT walnut	see page 3 - 4

36''h frame runoff table

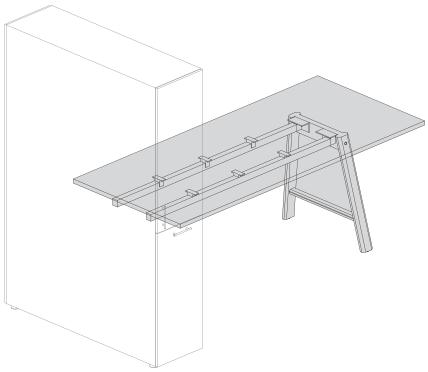

frame base with mediawall connection

- only connects to single and double sided 86½''h mediawalls
- 60''w - 90''w has a 10'' overhang, 96''w - 120''w has a 20'' overhang
- frame base runoff tables with mediawall connection must be specified with single-sided or double-sided mediawall

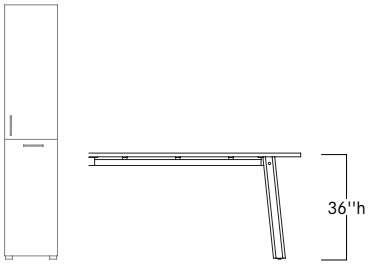

Runoff mediawall connection only connects to single-sided or double-sided mediawalls.

	sku	w	d	h	RA mediawall connection: PLL solid, WGL woodgrain	RA mediawall connection: OAK oak, WLT walnut
36"d tables	KEA	60	36	36	3943	5479
	KFA	66	36	36	4103	5599
	KGA	72	36	36	4254	5725
	KHA	78	36	36	4411	5834
	KIA	84	36	36	4946	6463
	KJA	90	36	36	5373	7046
	KKA	96	36	36	5572	7190
	KLA	102	36	36	6250	7832
	KMA	108	36	36	6452	7986
	KNA	114	36	36	6649	8145
	KOA	120	36	36	6850	8303
42"d tables 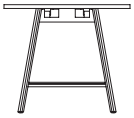	KEB	60	42	36	4029	5564
	KFB	66	42	36	4187	5685
	KGB	72	42	36	4338	5811
	KHB	78	42	36	4493	5920
	KIB	84	42	36	5030	6547
	KJB	90	42	36	5712	7381
	KKB	96	42	36	5911	7527
	KLB	102	42	36	6592	8173
	KMB	108	42	36	6792	8329
	KNB	114	42	36	6991	8487
	KOB	120	42	36	7192	8643
48"d tables	KFC	66	48	36	4271	5768
	KGC	72	48	36	4425	5898
	KHC	78	48	36	4580	6007
	KIC	84	48	36	5117	6635
	KJC	90	48	36	5798	7469
	KKC	96	48	36	5997	7613
	KLC	102	48	36	6676	8258
	KMC	108	48	36	6877	8414
	KNC	114	48	36	7075	8573
	KOC	120	48	36	7275	8728

specification codes example: BPS-SKU-RASQ000

series	sku	base	corner	grommet location
blueprint B P S -	-	RA mediawall connection R A	SQ square S Q	surface mount - pgs 90-92 mediatrac1 - pgs 94-106 000 none or undermount - pgs 86 - 89

material/finish code example: OAK 805 PLL 805

base material	base finish	top material	top finish
OAK oak WLT walnut	see page 4	PLL solid laminate WGL woodgrain laminate OAK oak WLT walnut	see page 3 - 4

42''h frame runoff table

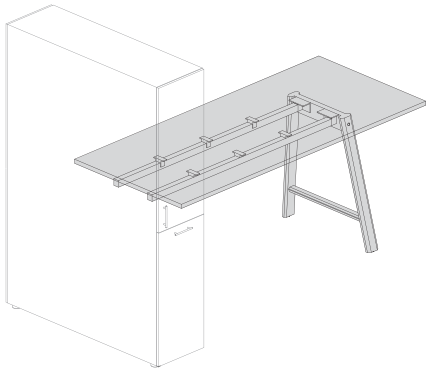

frame base with mediawall connection

- only connects to single and double sided 86½''h mediawalls
- 60''w - 90''w has a 10'' overhang, 96''w - 120''w has a 20'' overhang
- frame base runoff tables with mediawall connection must be specified with single-sided or double-sided mediawall

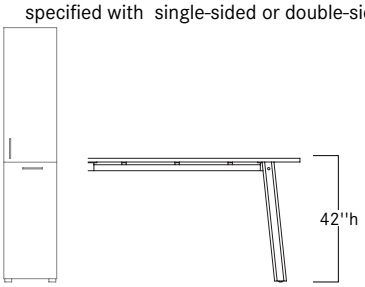

Runoff mediawall connection only connects to single-sided or double-sided mediawalls.

	sku	w	d	h	RA mediawall connection: PLL solid, WGL woodgrain	RA mediawall connection: OAK oak, WLT walnut
36"d tables	LEA	60	36	42	4152	5735
	LFA	66	36	42	4315	5855
	LGA	72	36	42	4470	5985
	LHA	78	36	42	4630	6098
	LIA	84	36	42	5181	6747
	LJA	90	36	42	5621	7343
	LKA	96	36	42	5827	7491
	LLA	102	36	42	6526	8156
	LMA	108	36	42	6736	8314
	LNA	114	36	42	6938	8478
	LOA	120	36	42	7144	8638
42"d tables	LEB	60	42	42	4239	5819
	LFB	66	42	42	4399	5943
	LGB	72	42	42	4558	6072
	LHB	78	42	42	4717	6185
	LIB	84	42	42	5270	6834
	LJB	90	42	42	5972	7694
	LKB	96	42	42	6178	7842
	LLB	102	42	42	6876	8507
	LMB	108	42	42	7084	8667
	LNB	114	42	42	7286	8832
	LOB	120	42	42	7494	8991

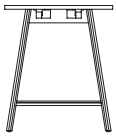

specification codes example: BPS-SKU-RASQ000

series	sku	base	corner	grommet location
blueprint B P S -	-	RA mediawall connection R A	SQ square S Q	surface mount - pgs 90-92 mediatrac1 - pgs 94-106 000 none or undermount - pgs 86 - 89

material/finish code example: OAK 805 PLL 805

base material	base finish	top material	top finish
OAK oak WLT walnut	see page 4	PLL solid laminate WGL woodgrain laminate OAK oak WLT walnut	see page 3 - 4

30''h block runoff table

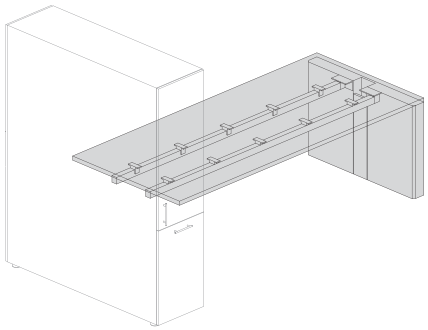

block base with mediawall connection

- only connects to single and double sided 73⅝''h mediawalls
- block base runoff tables with mediawall connection must be specified with single-sided or double-sided mediawall

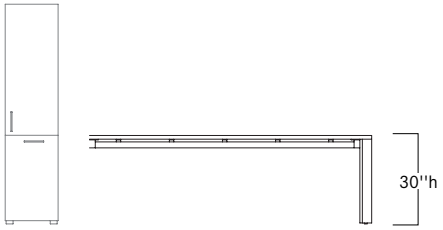

Runoff mediawall connection only connectsto single-sided or double-sided mediawalls.

	sku	w	d	h	**RC** mediawall connection	
					PLL solid **WGL** woodgrain	**OAK** oak **WLT** walnut
36"d tables	JCA	48	36	30	5252	6860
	JDA	54	36	30	5410	6980
	JEA	60	36	30	5564	7101
	JFA	66	36	30	5722	7218
	JGA	72	36	30	5873	7346
	JHA	78	36	30	6029	7456
	JIA	84	36	30	6565	8082
	JJA	90	36	30	6993	8664
	JKA	96	36	30	7191	8809
	JLA	102	36	30	7871	9452
	JMA	108	36	30	8072	9607
	JNA	114	36	30	8268	9764
42"d tables	JDB	54	42	30	5579	7152
	JEB	60	42	30	5738	7270
	JFB	66	42	30	5890	7391
	JGB	72	42	30	6041	7515
	JHB	78	42	30	6200	7625
	JIB	84	42	30	6736	8253
	JJB	90	42	30	7418	9089
	JKB	96	42	30	7616	9233
	JLB	102	42	30	8295	9879
	JMB	108	42	30	8496	10034
	JNB	114	42	30	8693	10192
48"d tables	JEC	60	48	30	5904	7448
	JFC	66	48	30	6062	7559
	JGC	72	48	30	6214	7686
	JHC	78	48	30	6369	7796
	JIC	84	48	30	6905	8424
	JJC	90	48	30	7585	9258
	JKC	96	48	30	7786	9403
	JLC	102	48	30	8467	10049
	JMC	108	48	30	8669	10203
	JNC	114	48	30	8867	10360

specification codes example: BPS-SKU-RCSQ000

series	sku	base	corner	grommet location
blueprint B P S -	-	RC mediawall connection R C	SQ square S Q	surface mount - pgs 90-92 mediatrac1 - pgs 94-106 000 none or undermount - pgs 86 - 89

material/finish code example: OAK 805 PLL 805

base material	base finish	top material	top finish
OAK oak WLT walnut	see page 4	PLL solid laminate WGL woodgrain laminate OAK oak WLT walnut	see page 3 - 4

36''h block runoff table

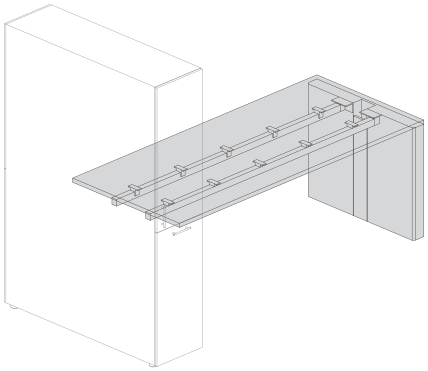

block base with mediawall connection

- only connects to single and double sided 86½''h mediawalls
- block base runoff tables with mediawall connection must be specified with single-sided or double-sided mediawall

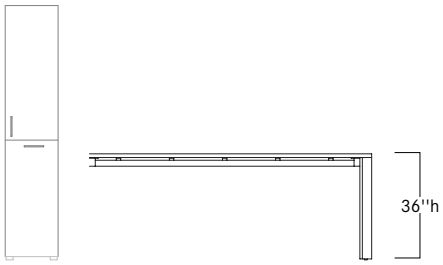

Runoff mediawall connection only connects to single-sided or double-sided mediawalls.

	sku	w	d	h	**RC** mediawall connection	
					PLL solid **WGL** woodgrain	**OAK** oak **WLT** walnut
36"d tables	KCA	48	36	36	5337	6947
	KDA	54	36	36	5495	7065
	KEA	60	36	36	5649	7183
	KFA	66	36	36	5807	7305
	KGA	72	36	36	5958	7431
	KHA	78	36	36	6111	7542
	KIA	84	36	36	6649	8167
	KJA	90	36	36	7077	8747
	KKA	96	36	36	7274	8892
	KLA	102	36	36	7956	9535
	KMA	108	36	36	8156	9693
	KNA	114	36	36	8355	9848
42"d tables	KDB	54	42	36	5664	7234
	KEB	60	42	36	5819	7358
	KFB	66	42	36	5976	7474
	KGB	72	42	36	6128	7601
	KHB	78	42	36	6286	7711
	KIB	84	42	36	6819	8338
	KJB	90	42	36	7504	9174
	KKB	96	42	36	7701	9319
	KLB	102	42	36	8381	9963
	KMB	108	42	36	8581	10117
	KNB	114	42	36	8780	10277
48"d tables	KEC	60	48	36	5990	7530
	KFC	66	48	36	6147	7645
	KGC	72	48	36	6299	7773
	KHC	78	48	36	6454	7881
	KIC	84	48	36	6991	8508
	KJC	90	48	36	7673	9346
	KKC	96	48	36	7872	9490
	KLC	102	48	36	8552	10134
	KMC	108	48	36	8752	10289
	KNC	114	48	36	8949	10448

specification codes example: BPS-SKU-RCSQ000

series	sku	base	corner	grommet location
blueprint B P S -	-	RC mediawall connection R C	SQ square S Q	surface mount - pgs 90-92 mediatrac1 - pgs 94-106 000 none or undermount - pgs 86 - 89

material/finish code example: OAK 805 PLL 805

base material	base finish	top material	top finish
OAK oak WLT walnut	see page 4	PLL solid laminate WGL woodgrain laminate OAK oak WLT walnut	see page 3 - 4

42''h block runoff table

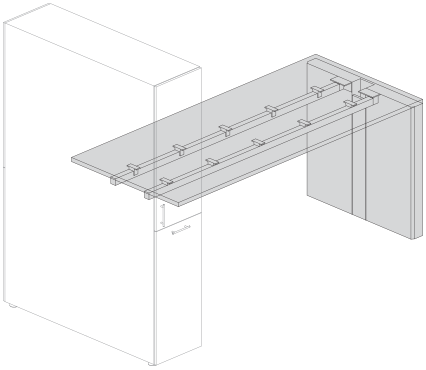

block base with mediawall connection

- only connects to single and double sided 86½''h mediawalls
- block base runoff tables with mediawall connection must be specified with single-sided or double-sided mediawall

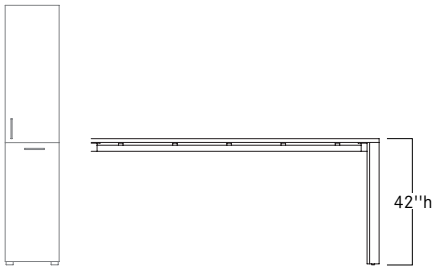

Runoff mediawall connection only connects to single-sided or double-sided mediawalls.

	sku	w	d	h	RC block connection: PLL solid, WGL woodgrain	RC block connection: OAK oak, WLT walnut
36"d tables	LCA	48	36	42	5426	7032
	LDA	54	36	42	5579	7152
	LEA	60	36	42	5738	7270
	LFA	66	36	42	5891	7391
	LGA	72	36	42	6041	7515
	LHA	78	36	42	6200	7625
	LIA	84	36	42	6736	8253
	LJA	90	36	42	7162	8834
	LKA	96	36	42	7361	8977
	LLA	102	36	42	8040	9622
	LMA	108	36	42	8242	9778
	LNA	114	36	42	8439	9935
42"d tables	LDB	54	42	42	5750	7321
	LEB	60	42	42	5904	7440
	LFB	66	42	42	6062	7559
	LGB	72	42	42	6214	7686
	LHB	78	42	42	6369	7796
	LIB	84	42	42	6905	8424
	LJB	90	42	42	7585	9258
	LKB	96	42	42	7786	9402
	LLB	102	42	42	8467	10049
	LMB	108	42	42	8669	10203
	LNB	114	42	42	8867	10361

specification codes example: BPS-SKU-RCSQ000

series	sku	base	corner	grommet location
blueprint B P S -	-	RC mediawall connection R C	SQ square S Q	surface mount - pgs 90-92 mediatrac1 - pgs 94-106 000 none or undermount - pgs 86 - 89

material/finish code example: OAK 805 PLL 805

base material	base finish	top material	top finish
OAK oak WLT walnut	see page 4	PLL solid laminate WGL woodgrain laminate OAK oak WLT walnut	see page 3 - 4

Under Mount Power

Bernhardt Design offers a proprietary under mount power solution allowing quick and easy daisy chaining of modules together. A maximum of (7) under mount power modules can be connected on one power infeed.

The under mount power modules are available in (2) configurations: (2) receptacles, or (1) receptacle, (1) 2 amp USB-A port and (1) 2 amp USB-C port. Each module in a kit will be provided with the same configuration as specified by the end user.

End user installation will be required per individual SKU. Each SKU includes a separate power infeed with a 10' grounded plug to connect to the power source. See installation instructions for installing.

Under mount power is certified to UL STD 962 A CSA STD 22.2 No. 21.

Note: End user installation will be required per individual SKU.

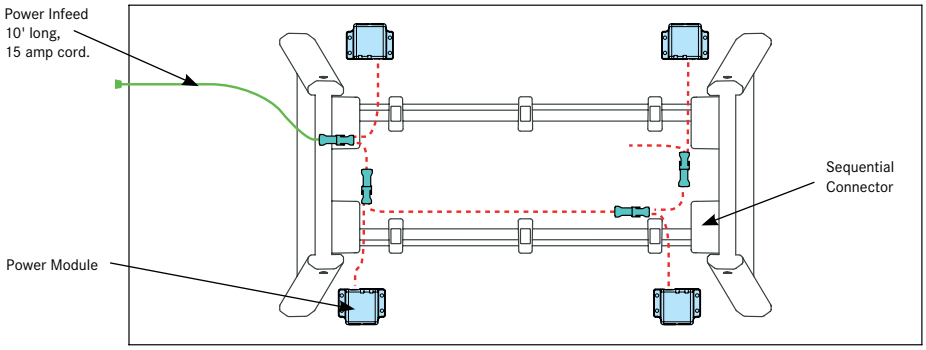

Bernhardt Design provides recommendations for installation locations as shown on pages 87-89. Installation instructions are included with each power unit. Power is specified separately and installed in the field.

Power Modules
Matte Black Finish

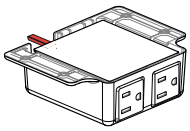

power + power
(2) 120 v 60 Hz.
15 amp receptacles
120 v 60 Hz.
braided cotton 10' cord
grounded plug
UL 962 listed

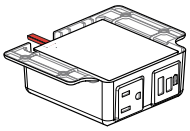

power + usb-a + usb-c
Updated Information Shown in RED
(1) 120 v 60 Hz. 15 amp receptacle
(1) 2 amp USB-A port, 10 watt
(1) 2 amp USB-C port, 20 watt
braided cotton 10' cord
grounded plug
UL 962 listed

Replacement Housing
with Location for Mini AAP Plate

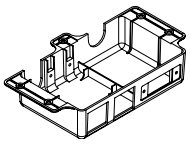

Sequential Connector
Matte Black Finish

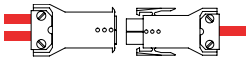

Power Infeed
10' Grounded Plug
Required per individual SKU
Braided Cord

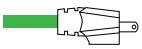

15 amp

Blueprint Wire Management

Blueprint power infeeds are routed through integral spacers to a multi-wire clip that offers advanced wire management.
The following illustration shows a section view of the Blueprint table with under mount power.

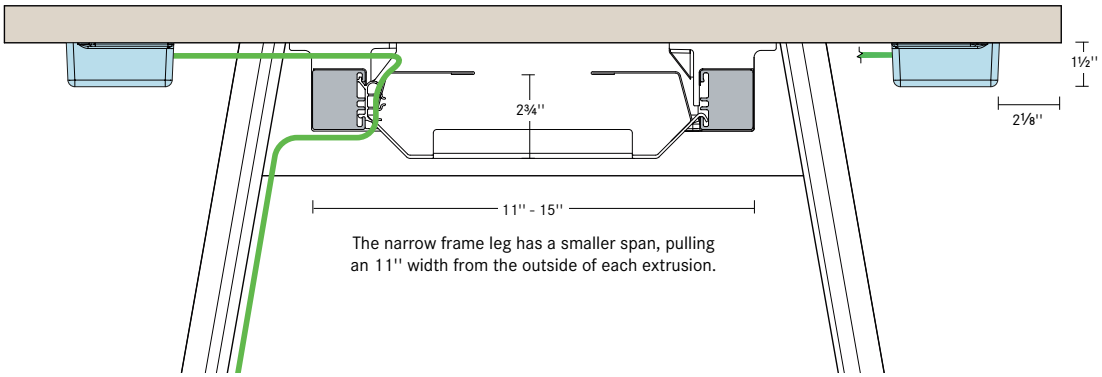

The multi-wire clip presents a wire management solution that offers space for (2) thicker power cords and an area for ethernet cords and smaller cords in the center. This system for wire management provides a cleaner and more simplified look by containing wires up against the extrusion.

Under mount power kits are specified and sold separately. Each kit lists the table top sizes compatible with the number of power units shown.

All kits include a 10' corded infeed with grounded and fused plug.

# of Kits	sku	specifications		PP	PU
				power + power	power + usb + usb-c
				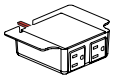	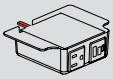
1 Module Kit					
	U01S	48" - 120" Table		$ 408	$ 576
2 Module Kits					
	U28S	48" - 72" Table	24" - 30" Narrow Depth Tops	1359	1882
	U28L	78" - 120" Table	24" - 30" Narrow Depth Tops	1478	2000
	single sided option for 24"d and 30" d narrow tops				
	U02S	48" - 120" Table		1214	1736
	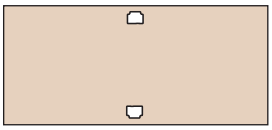				
3 Module Kits					
	U29S	48" - 72" Table	24" - 30" Narrow Depth Tops	1632	2416
	U29L	78" - 120" Table	24" - 30" Narrow Depth Tops	1868	2652
	single sided option for 24"d and 30" d narrow tops				
	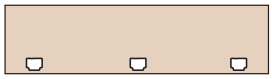				
	U03S	48" - 120" Table		1632	2416
	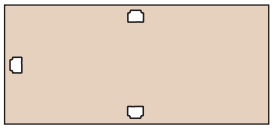				

specification codes example: ACS-SKU-PP

series	sku	power style
A C S -	-	**PP** power + power **PU** power + usb + usb-c

Under mount power kits are specified and sold separately. Each kit lists the table top sizes compatible with the number of power units shown.

All kits include a 10' corded infeed with grounded and fused plug.

# of Kits	sku	specifications	PP power + power	PU power + usb + usb-c
4 Module Kits				
	U27S	42" - 72" Round Table 36" - 66" Arched Table	$ 2016	$ 3061
	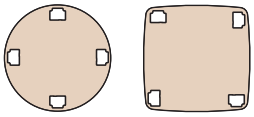			
	U04S	48" - 120" Table	2016	2776
5 Module Kits				
	U05S	48" - 120" Table	2540	3690
6 Module Kits				
	U06S	48" - 120" Table	2661	4151
	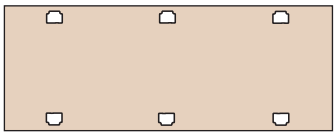			
7 Module Kits				
	U07S	48" - 120" Table	3225	5175
	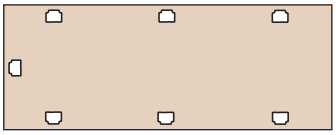			

specification codes example: ACS-SKU-PP

series	sku	power style
A C S -	-	**PP** power + power **PU** power + usb + usb-c

	description	sku	w	d	h	specifications	price
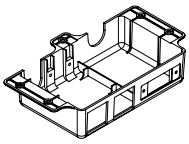	**under mount replacement housing** for use with Extron® MAAP installed in the field by end user switch existing housing onsite to this housing to accommodate Extron® MAAP	UPH	7⅜	3¾	1½		$ 221
	computer/audio/video mini module Extron® MAAP HDMI female to HDMI female on 10” pigtail single space insert	MP1	2⅛	-	⅝		422
	phone/data mini module Extron® MAAP one RJ45 female to punch down leviton CAT6 data single space insert	MP4	2⅛	-	⅝		293
	phone/data mini module Extron® MAAP one RJ45 female to female barrel single space insert	MP5	2⅛	-	⅝		252
	blank plate Extron® MAAP blank plate black powder coat finish single space insert	MP6	2⅛	-	⅝		164

specification codes example: ACS-SKU

series	**sku**
accessories	
A C S -	

Surface Mount Power Module

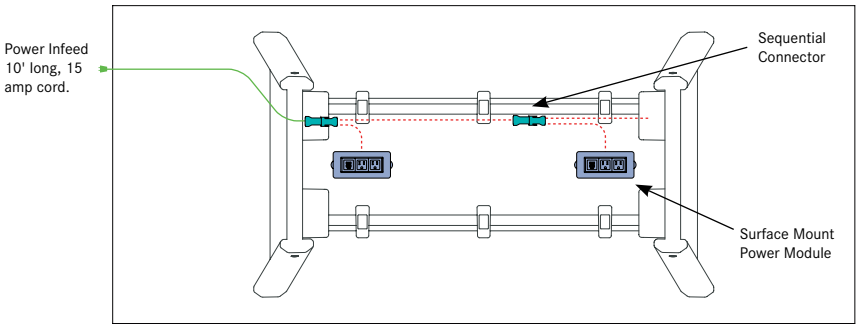

Note: End user installation will be required per individual SKU.
Power specified separately. See the following pages for grommet codes.

Blueprint offers a proprietary surface mount power solution allowing quick and easy daisy chaining of tables. A maximum of (3) surface mount power modules can be connected on a single power infeed.

The surface mount power module is availble in one configuration with (2) 15 amp grounded receptacles, (1) 2 amp USB-A port and (1) 2 amp USB-C port.

Each SKU includes a separate power infeed with a 10' grounded plug to connect to the power source. If specified as a single module, the unit will have a 10' infeed with a grounded plug rather than a sequential connector.

Surface mount power is certified to UL STD 962 A CSA STD 22.2 No. 21.

Power Module
Black, Silver or White Finish

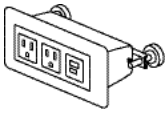

Updated Information Shown in RED
(2) 120 v 60 Hz. 15 amp receptacles
(1) 2 amp USB-A port, 10 watt
(1) 2 amp USB-C port, 20 watt
6½"w x 3"d x 2¾"h

Sequntial Connector
Matte Black Finish

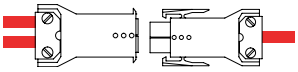

Power Infeed
10' Grounded Plug

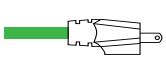

15 amp

Surface Mount power grommet kits and locations codes for veneer and laminates tops.
Kits include all jumpers and necessary components based on table length and power option.
Grommet kits ship separately from tops.

Specify table length, power style, lid material and frame finish below.

sku	specifications	price
Z01	**42" - 72" Round and Arched Tables**	$ 945
	(1) surface mount module	

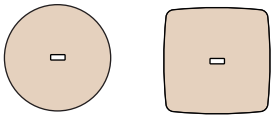

	48" - 120" Table 36" - 48" Depth Tops	945
	(1) surface mount module	

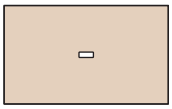

Z11	**48" - 120" Table 24" - 30" Narrow Depth Tops**	945
	(1) surface mount module	

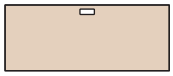

Z06	**48" - 120" Mediawall/Wall Mount Option**	945
	(1) surface mount module	

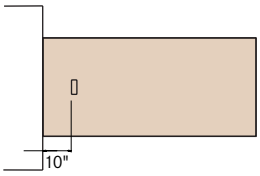

specification codes example: ACS-SKU-120

series	**sku**	**table length**	
top		**042**	**084**
		048	**090**
		054	**096**
		060	**102**
		066	**108**
		072	**114**
		078	**120**

A | C | S | - -

material + finish code example: BK

finish

BK black
SV silver
WH white

Surface Mount power grommet kits and locations codes for veneer and laminates tops.
Kits include all jumpers and necessary components based on table length and power option.
Grommet kits ship separately from tops.

Specify table length and finish below.

sku	specifications		price
Z02	**84" - 90" Table**	**36" - 48" Depth Tops**	$ 2041
	(2) surface mount modules		
	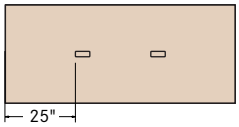		
	96" - 120" Table	**36" - 48" Depth Tops**	2041
	(2) surface mount module		
	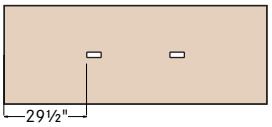		
Z12	**96" - 120" Table**	**24" - 30" Narrow Depth Tops**	2041
	(2) surface mount modules		
	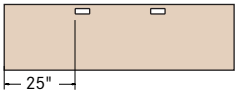		
Z03	**114" - 120" Table**	**36" - 48" Depth Tops**	2798
	(3) surface mount modules		
	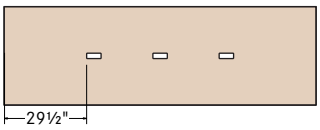		
Z13	**114" - 120" Table**	**24" - 30" Narrow Depth Tops**	2798
	(3) surface mount modules		
	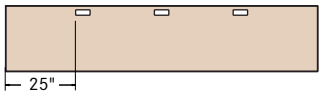		

specification codes example: ACS-SKU-120

series	**sku**	**table length**
top		**084**
		090
		096
		102
		108
		114
		120
A C S -	-	

material + finish code example: BK

finish	
BK	black
SV	silver
WH	white

Round Surface Power Module

Available only for the round and arched square tables, the Round Surface Power Module offers a simple and clean way of bringing power and USB to the worksurface.

The Power Module installs flush to the worksurface and is offerred in one configuration: (1) receptacle and (1) 2 amp USB-A port and (1) 2 amp USB-C port.

The power module is UL approved with spill-proof technology and a 15 amp 10' power infeed. Power module power is certified to UL STD 962 A CSA STD 22.2 No. 21.

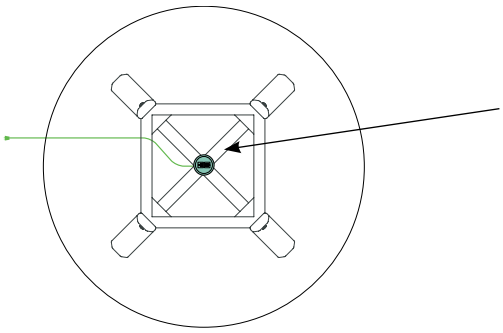

Blueprint Power Module is ideal for charging tablets or other USB friendly devices.

Note: End user installation will be required per individual SKU.
Power specified separately. See below for grommet code.

Power Module
Brushed Nickel / Matte Black / Matte White

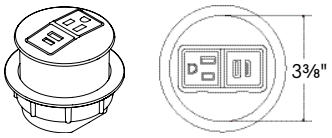

Updated Information Shown in RED
(1) 20 v 60 Hz. 15 amp receptacles
(1) 2 amp USB-A port, 10 watt
(1) 2 amp USB-C port, 20 watt
10' braided cotton cord
3⅜w" x 3⅜d" x2⅝h"

Power Infeed
10' Grounded Plug

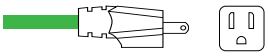

15 amp

Specify table length and finish below.

sku	specifications	price
004	**42" - 72" Tables**	$ 1106

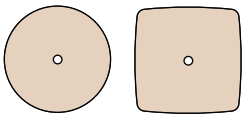

specification codes example: ACS-004-048

series	sku	table length
accessories		**042**
		048
		054
		060
		066
		072
A C S -	0 0 4 -	

finish code example: WH

finish
BK black
BN brushed nickel
WH white

Mediatrac 1™

Mediatrac 1 grommet system is a simplified system for bringing power and data to the meeting table worksurface in a clean simple way.

Mediatrac 1 provides power and various options for Extron AAP data configurations. Grommets are available in (3) different sizes: a 8" x 4" single door unit, a 8" x 8" double door unit and a 8" x 24" double door unit. All units have brushed aluminum trim with options for aluminum, laminate, veneer, corian and glass lids.

Mediatrac 1 has 4 different options for bringing power to the table, corded, harded or 4-trac system with either a corded or hardwired power infeed.

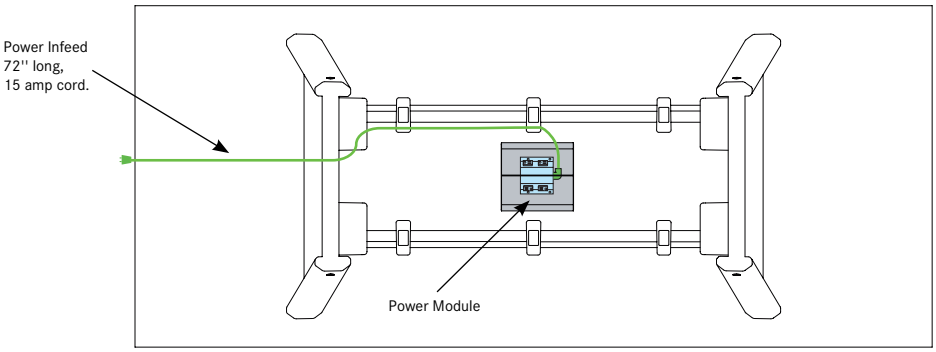

Note: End user installation will be required per individual SKU.
Power specified separately. See pages 98-104 for grommet codes.

Mediatrac 1 Options

8" Single Door Mediatrac™ Grommet

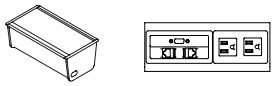

2 grounded outlets, 1 exit plug,
accepts 2 Extron single space AAP's,
AAP modules specified separately,
brushed aluminum frame

8" Double Door Mediatrac™ Grommet

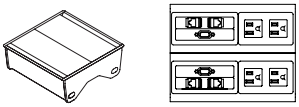

4 grounded outlets, 1 exit plug,
accepts 4 Extron single space AAP's,
AAP modules specified separately,
brushed aluminum frame

24" Double Door Mediatrac™ Grommet

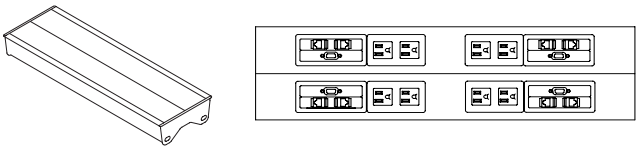

8 grounded outlets, 2 exit plugs,
accepts 8 Extron single space AAP's,
AAP modules specified separately,
brushed aluminum frame

Mediatrac 1 Grommet Kits (Includes the following)

Power Module

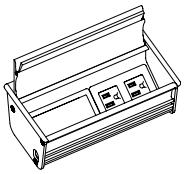

Number and configuration
of grommet modules determined
by the grommet code

Jumper (if required)

Jumper are determined by the
length of the top specified

Connector + H-Block

Will be included in kit when the
4-trac option is specified

Power Infeed Options

72" 4-Trac Power Infeed with 20 amp plug

72" 4-Trac Power Infeed with Hardwired

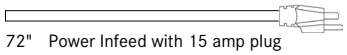

72" Power Infeed with 15 amp plug

72" ⅜" Hardwire Whip

15 amp receptacle

20 amp receptacle, 4-Trac Only

Wire Management Snake

brushed nickel finish
flexible cable management
weighted metal base

Mediatrac 1 Dimensional Specifications

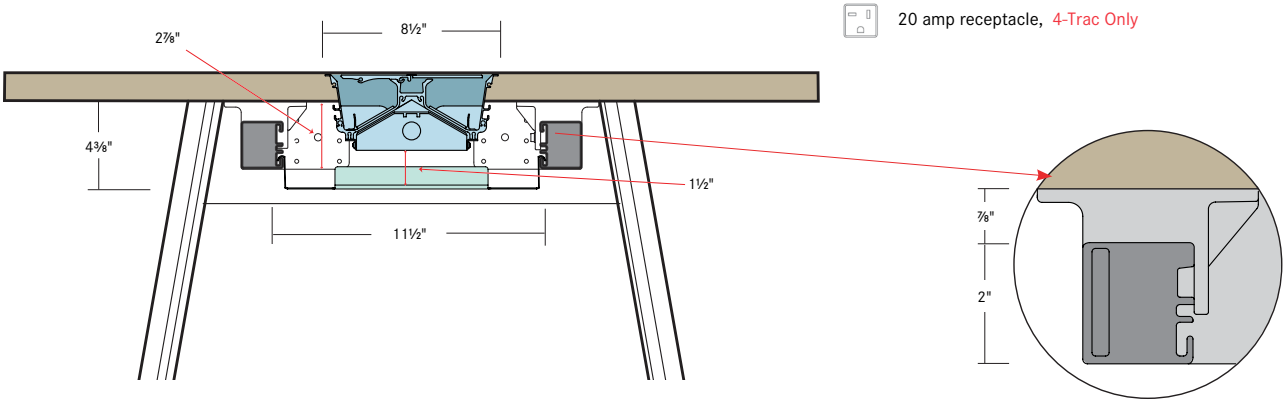

Detail of Mediatrac 1 Rail

The narrow frame leg has a smaller span, pulling an 11'' width from the outside of each extrusion.

Mediatrac 1 is certified to UL STD 962A, UL STD 1363, CSA STD 22.2 No. 308-14. 4-Trac is certified to UL STD 183 CSA STD 22.2 No. 203.1-14.

Mediatrac1™ 4-Trac Power System

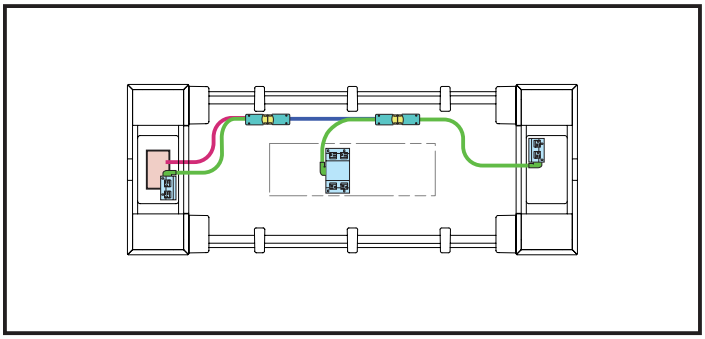

Mediatrac1 Grommets Using Electrical 4-Trac Power System

- Power Infeed
- Power Module Whip
- Modular Connector
- Jumper
- Power Drop
- Power Module
- H-Block

4-Trac Infeed snaps into an H-Block connected to a Mediatrac1 power module with a 18" modular end.

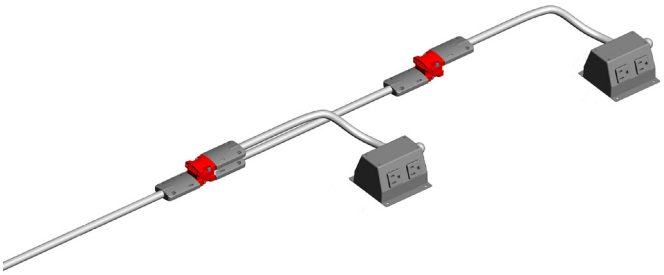

4-Trac H-Block connects up to (4) Jumpers and Power Modules.

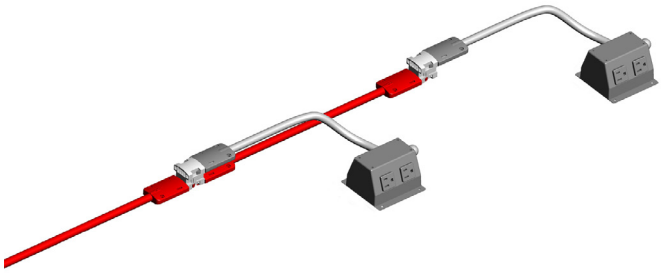

4-Trac Jumpers used in conjunction with the H-Block to wire the system.

Mediatrac1 is available in our 4-Trac Power System, allowing for easy installation and reconfiguration capabilities.

4-Trac snaps together easily underneath the worksurface using whips from each power module and the integral 4-Trac jumpers specified for use with each particular Mediatrac1 grommet size. **The grommet layout and wiring scheme is specified specifically for each top size and is included with each kit.**

Each power transition is accommodated by an H-Block, which gives the ability to snap together four power leads. Using the provided documentation to facilitate installation, powering the Mediatrac1 system is as easy as snapping together connectors.

Infeeds are available in both hardwired and corded version in a 72" length. The plug version for the Mediatrac1 power system is 20 amps and will require plugging into a 20 amp outlet to comply with electrical codes.

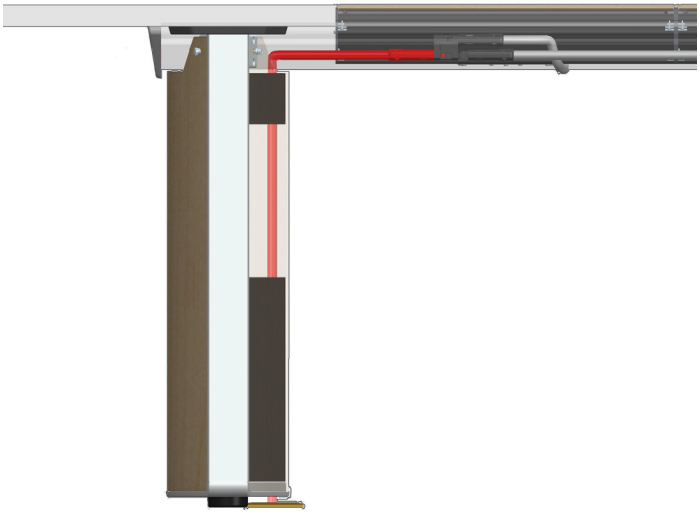

72" 4-Trac Power Infeed with Hardwired Conduit

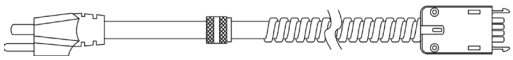

72" 4-Trac Power Infeed with 20 amp Plug

20 amp Receptacle

Illustrations showing electrical 4-Trac power infeed end options – hardwired conduit and 20 amp corded plug. Both are available in 72" lengths. 20 amp receptacle must be used with the plug.

Mediatrac 1™ Grommet Placement Kits

Mediatrac 1™ power options by Bernhardt Design are offered as a grommet kit which includes all grommets, jumpers and necessary components needed to bring power from the floor to the user. The number of grommets and lengths of jumpers are determined by the lengths and power options selected. Your kit will come complete with all necessary parts to install in the field.

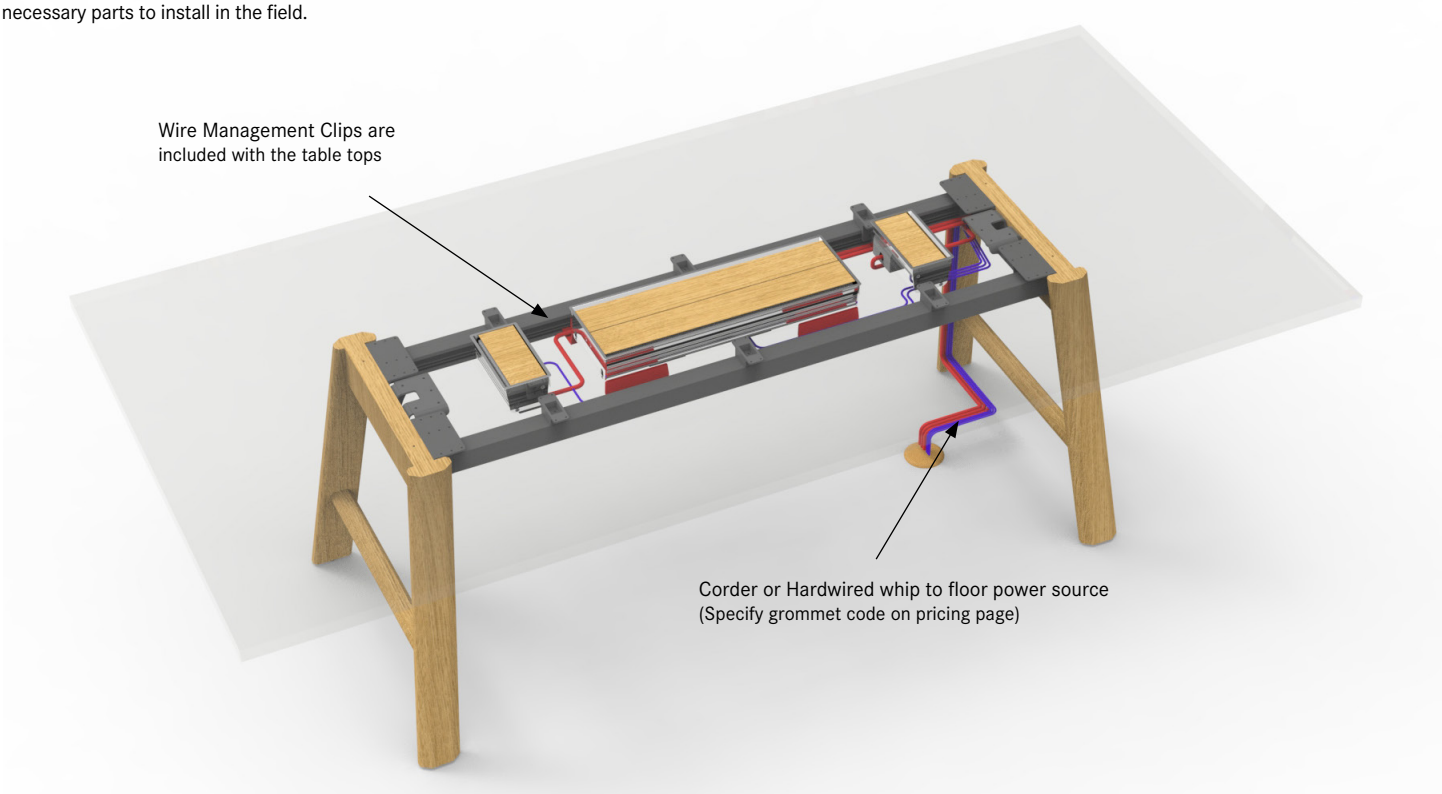

Ordering Mediatrac 1 Grommets

- Determine the amount of power and data needed
- Select the grommet code that best suits your requirements
- Select the type of power infeed you need
- Select the length of table that this is to be used on
  (make sure that this grommet code matches the code used when ordering your table)
- Select the grommet trim/frame finish
- Select the lid/door material
- Select the lid/door finish

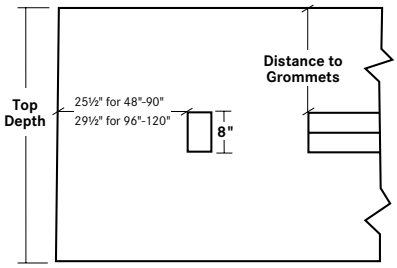

Top Depth	Distance to Grommet
36"	14"
42"	17"
48"	20"

The Grommet Kit will ship separately and will be installed in the **field.**

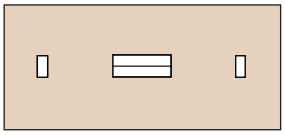

Ordering Example:

120" x 54" Table Top
Walnut Vveneer, 870 Finish
M08 Grommet Code with 4-trac Corded Power
Walnut Door/Brushed Aluminum Trim

specification codes example: MGS-M08-4TC120

series	sku	power option	table length		
top		**CRD** corded	**096**	**150**	**204**
		HWD hardwired	**102**	**156**	**210**
		4TC four trac corded	**108**	**162**	**216**
		4TH four trac hardwired	**114**	**168**	**222**
			120	**174**	**228**
			126	**180**	**234**
			132	**186**	**224**
			138	**192**	
			144	**198**	
M G S -	M 0 8 -	4 T C	1 2 0		

material + finish code example: BA WLT 870

frame finish	lid material	lid finish
BA brushed aluminum	**ALM** aluminum	see pages 3-5
powder coat upcharge $175	**PLL** solid laminate	
WH satin white powder coat	**WGL** woodgrain laminate	
GR graphite powder coat	**MPL** maple	
BZ bronze powder coat	**OAK** oak	
IG iron grey powder coat		
RD black red powder coat		
BK matte black powder coat		
B A	W L T	8 7 0

Mediatrac 1 grommet kits and locations codes for veneer, laminates and solid surface tops.
Kits include all jumpers and necessary components based on table length and power option.
Grommet kits ship separately from tops.

sku	specifications	frame material **ALM** aluminum
B01	**42" - 240" Round and Square Tables**	$ 169
	(1) 3" single round pass through grommet kit	

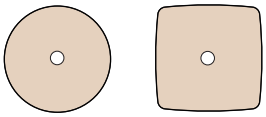

	48" - 120" Table	169
	(1) 3" single round pass through grommet kit	

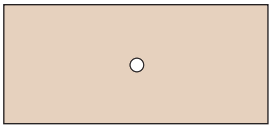

specification codes example: ACS-SKU

series	sku
top	
A C S -	-

material + finish code example: BA

frame finish

- **BA** brushed aluminum
- **WH** satin white powder coat
- **GR** graphite powder coat
- **BZ** bronze powder coat
- **IG** iron grey powder coat
- **RD** black red powder coat
- **BK** matte black powder coat

Mediatrac 1 grommet kits and locations codes for veneer, laminates and solid surface tops. Kits include all jumpers and necessary components based on table length and power option. Grommet kits ship separately from tops.

Specify table length, power style, lid material and frame finish below.
Mediatrac 1 kits are not available for Narrow 42" Frame Base tables.

sku	specifications	lid material: **ALM** aluminum	**PLL** solid laminate **WGL** woodgrain laminate	**OAK** oak **WLT** walnut
B03	**42" - 72" Round and Arched Square Tables**	$ 2183	$ 2457	$ 3413
	(1) 8" double door mediatrac grommet			
	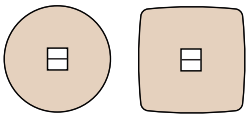			
	48" - 120" Table	2183	2457	3413
	(1) 8" double door mediatrac grommet			
	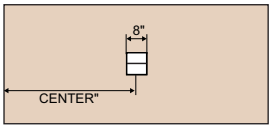			
B04	**60" - 90" Table**	3002	3275	5527
	(2) 8" single door mediatrac grommets			
	96" - 120" Table	3002	3275	5527
	(2) 8" single door mediatrac grommets			
B06	**78" - 120" Table**	3072	3345	4572
	(1) 24" double door mediatrac grommet			
	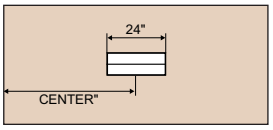			

specification codes example: MGS-SKU-CRD120

series	sku	power option	table length
top		**CRD** corded **HWD** hardwired **4TC** four trac corded **4TH** four trac hardwired	**042** **084** **048** **090** **054** **096** **060** **102** **066** **108** **072** **114** **078** **120**
M G S -	-		

material + finish code example: BA WLT 839

frame finish	lid material	lid finish
BA brushed aluminum **powder coat upcharge $75** **WH** satin white powder coat **GR** graphite powder coat **BZ** bronze powder coat **IG** iron grey powder coat **RD** black red powder coat **BK** matte black powder coat	**ALM** aluminum **PLL** solid laminate **WGL** woodgrain laminate **OAK** oak **WLT** walnut	see pages 3-5

Note: When **ALM** Aluminum is selected for lid materi, lid material will match frame finish.

Mediatrac 1 grommet kits and locations codes for veneer, laminates and solid surface tops. Kits include all jumpers and necessary components based on table length and power option. Grommet kits ship separately from tops.

Specify table length, power style, lid material and frame finish below.
Mediatrac 1 kits are not available for Narrow 42" Frame Base tables.

sku	specifications	lid material: **ALM** aluminum	**PLL** solid laminate **WGL** woodgrain laminate	**OAK** oak **WLT** walnut
B05	**78" - 90" Table**	$ 3958	$ 4231	$ 6548
	(2) 8" double door mediatrac grommets			
	96" - 120" Table	3958	4231	6548
	(2) 8" double door mediatrac grommets			
	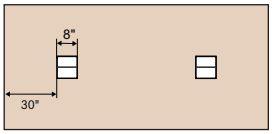			
B07	**84" - 90" Table**	4777	5323	8596
	(1) 8" double door mediatrac grommet (2) 8" single door mediatrac grommets			
	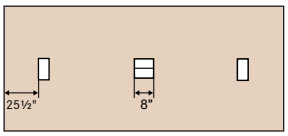			
	96" - 120" Table	4777	5323	8596
	(1) 8" double door mediatrac grommet (2) 8" single door mediatrac grommets			
	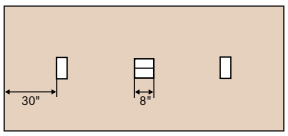			

specification codes example: MGS-SKU-CRD120

series	sku	power option	table length
top		**CRD** corded	**078**
		HWD hardwired	**084**
		4TC four trac corded	**090**
		4TH four trac hardwired	**096**
			102
			108
			114
			120
M G S -	-		

material + finish code example: BA WLT 839

frame finish	lid material	lid finish
BA brushed aluminum	**ALM** aluminum	see pages 3-5
powder coat upcharge 150	**PLL** solid laminate	
WH satin white powder coat	**WGL** woodgrain laminate	
GR graphite powder coat	**OAK** oak	
BZ bronze powder coat	**WLT** walnut	
IG iron grey powder coat		
RD black red powder coat		
BK matte black powder coat		

Note: When **ALM** Aluminum is selected for lid materi, lid material will match frame finish.

Mediatrac 1 grommet kits and locations codes for veneer, laminates and solid surface tops. Kits include all jumpers and necessary components based on table length and power option. Grommet kits ship separately from tops.

Specify table length, power style, lid material and frame finish below.
Mediatrac 1 kits are not available for Narrow 42" Frame Base tables.

sku	specifications	lid material: **ALM** aluminum	**PLL** solid laminate **WGL** woodgrain laminate	**OAK** oak **WLT** walnut
B08	**114" - 120" Table** (1) 24" double door mediatrac grommet (2) 8" single door mediatrac grommets	$ 5595	$ 6140	$ 9483
B12	**108" - 240" Table** (2) 24" double door mediatrac grommets	6155	6700	8528

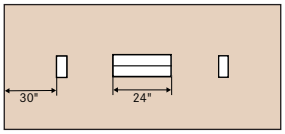

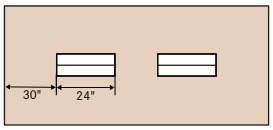

specification codes example: MGS-SKU-CRD120

series	sku	power option	table length		
top		**CRD** corded	**108**	**168**	**228**
		HWD hardwired	**114**	**174**	**234**
		4TC four trac corded	**120**	**180**	**240**
		4TH four trac hardwired	**126**	**186**	
			132	**192**	
			138	**198**	
			144	**204**	
			150	**210**	
			156	**216**	
M G S -	-				

material + finish code example: BA WLT 839

frame finish	lid material	lid finish
BA brushed aluminum	**ALM** aluminum	see pages 3-5
powder coat upcharge $150	**PLL** solid laminate	
WH satin white powder coat	**WGL** woodgrain laminate	
GR graphite powder coat	**OAK** oak	
BZ bronze powder coat	**WLT** walnut	
IG iron grey powder coat		
RD black red powder coat		
BK matte black powder coat		

Note: When **ALM** Aluminum is selected for lid materi, lid material will match frame finish.

Mediatrac 1 grommet kits and locations codes for veneer, laminates and solid surface tops. Kits include all jumpers and necessary components based on table length and power option. Grommet kits ship separately from tops.

Specify table length, power style, lid material and frame finish below.
Mediatrac 1 kits are not available for Narrow 42" Frame Base tables.

sku	specifications	lid material		
		ALM aluminum	**PLL** solid laminate **WGL** woodgrain laminate	**OAK** oak **WLT** walnut
B10	**114" - 120" Table**	$ 5936	$ 6482	$ 9822

(3) 8" double door mediatrac grommets

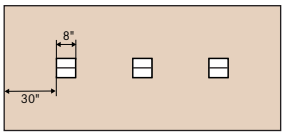

specification codes example: MGS-SKU-CRD120

series	sku	power option	table length
top		**CRD** corded **HWD** hardwired **4TC** four trac corded **4TH** four trac hardwired	**114** **120**
M G S -	-		

material + finish code example: BA WLT 839

frame finish	lid material	lid finish
BA brushed aluminum **powder coat upcharge $225** **WH** satin white powder coat **GR** graphite powder coat **BZ** bronze powder coat **IG** iron grey powder coat **RD** black red powder coat **BK** matte black powder coat	**ALM** aluminum **PLL** solid laminate **WGL** woodgrain laminate **OAK** oak **WLT** walnut	see pages 3-5

Note: When **ALM** Aluminum is selected for lid materi, lid material will match frame finish.

Mediatrac 1 grommet kits and locations codes for veneer, laminates and solid surface tops. Kits include all jumpers and necessary components based on table length and power option. Grommet kits ship separately from tops.

Specify table length, power style, lid material and frame finish below.
Mediatrac 1 kits are not available for Narrow 42" Frame Base tables.

sku	specifications	lid material: **ALM** aluminum	**PLL** solid laminate **WGL** woodgrain laminate	**OAK** oak **WLT** walnut
BW1	**48" - 120" Table**	$ 1502	$ 1638	$ 2764
	(1) 8" single door mediatrac grommet			
BW2	**48" - 90" Table**	1502	1638	2764
	(1) 8" single door mediatrac grommet			
	96" - 120" Table	1502	1638	2764
	(1) 8" single door mediatrac grommet			
BW6	**78" - 120" Table**	3072	3345	4572
	(1) 24" double door mediatrac grommet			

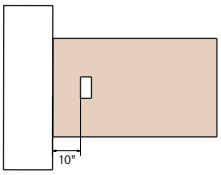

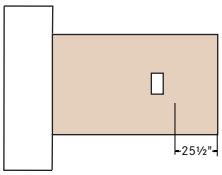

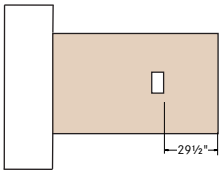

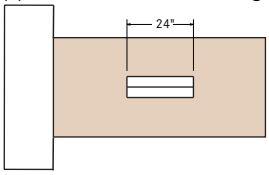

specification codes example: MGS-SKU-CRD120

series	sku	power option	table length	
top		**CRD** corded	**048**	**090**
		HWD hardwired	**054**	**096**
		4TC four trac corded	**060**	**102**
		4TH four trac hardwired	**066**	**108**
			072	**114**
			078	**120**
			084	
M G S -	-			

material + finish code example: BA WLT 839

frame finish	lid material	lid finish
BA brushed aluminum	**ALM** aluminum	see pages 3-5
powder coat upcharge $75	**PLL** solid laminate	
WH satin white powder coat	**WGL** woodgrain laminate	
GR graphite powder coat	**OAK** oak	
BZ bronze powder coat	**WLT** walnut	
IG iron grey powder coat		
RD black red powder coat		
BK matte black powder coat		

Note: When **ALM** Aluminum is selected for lid materi, lid material will match frame finish.

Mediatrac 1 grommet kits and locations codes for veneer, laminates and solid surface tops. Kits include all jumpers and necessary components based on table length and power option. Grommet kits ship separately from tops.

Specify table length, power style, lid material and frame finish below.
Mediatrac 1 kits are not available for Narrow 42" Frame Base tables.

sku	specifications	lid material: **ALM** aluminum	**PLL** solid laminate **WGL** woodgrain laminate	**OAK** oak **WLT** walnut
BW5	**66" - 90" Table**	$ 3958	$ 4231	$ 6548
	(2) 8" double door mediatrac grommets			
	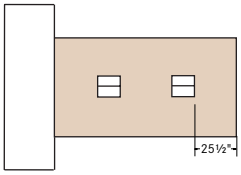			
	96" - 120" Table	3958	4231	6548
	(2) 8" double door mediatrac grommets			
	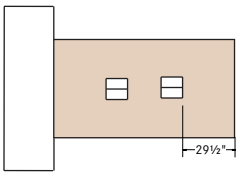			
BW8	**90" Table**	5184	5730	9004
	(1) 8" single door mediatrac grommet			
	(1) 24" double door mediatrac grommet			
	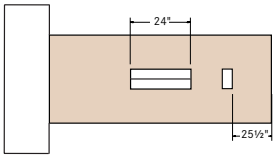			
	96" - 120" Table	5184	5730	9004
	(1) 8" single door mediatrac grommet			
	(1) 24" double door mediatrac grommet			
	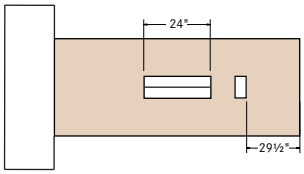			

specification codes example: MGS-SKU-CRD120

series	sku	power option	table length
top		**CRD** corded **HWD** hardwired **4TC** four trac corded **4TH** four trac hardwired	**066** **096** **072** **102** **078** **108** **084** **114** **090** **120**
M | G | S | -	| | | -	| | |	| |

material + finish code example: BA WLT 839

frame finish	lid material	lid finish
BA brushed aluminum **powder coat upcharge $150** **WH** satin white powder coat **GR** graphite powder coat **BZ** bronze powder coat **IG** iron grey powder coat **RD** black red powder coat **BK** matte black powder coat	**ALM** aluminum **PLL** solid laminate **WGL** woodgrain laminate **OAK** oak **WLT** walnut	see pages 3-5
| |	| | |	| | |

Note: When **ALM** Aluminum is selected for lid materi, lid material will match frame finish.

	description	sku	w	d	h	price
	wire management snake brushed aluminum or brushed nickel finish flexible cable management system weighted metal base specify finish code BA or BN **conference height ONLY**	VGW	2½	2½	30	$ 217
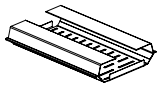	**equipment tray** flaps	VMN	18	12	3	339
	wire clip hooks onto mediatrac rail smoke polycarbonate finish 4 included with each table at no charge	VNZ	6	2¼	1¾	83
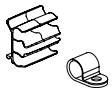	**wire management kit** 12 multi wire clips 8 wire clips black	WMK	1 ⅝	⅞	1½	221

series	sku
accessories	
A C S -	

BA brushed aluminum
BN brushed nickel

	description	sku	w	d	h	price
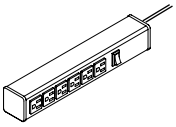	**power strip** 6 outlet center; 110v 15 amp 15' plug-in cord surge protector UL Listed	VNY	12¼	2	1¾	$ 597
	blank plate Extron® AAP blank plate with black powder coat finish single space insert	VGG	3½	-	⅝	177
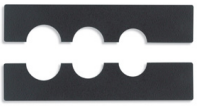	**cable pass-through module** Extron® AAP single space, cable pass-through plates sold as a set of (2) black powder coat finish	VGY	3½	-	1⅜	502
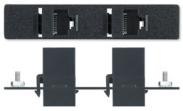	**phone/data module** Extron® AAP two RJ-45 pass-through barrels CAT 5e single space insert	VGD	3½	-	⅝	379
	phone/data module Extron® AAP one RJ-45 female to punch down block leviton CAT6 data single space insert	VGK	3½	-	⅝	303
	phone/data module Extron® AAP two RJ-45 female to punch down block leviton CAT6 data single space insert	VGP	3½	-	⅝	421
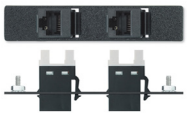	**phone/data module** Extron® AAP two RJ-45 female to punch down block AMP CAT6 data single space insert	VGL	3½	-	⅝	421

specification codes example: ACS-SKU

series	**sku**
accessories A C S -	

	description	sku	w	d	h	price
	phone/data module Extron® AAP two RJ-45 female to punch down block higher than CAT6 data type connectors systomax MGS500 backward compatible double space insert	VGQ	3½	-	1⅜	$ 572
	computer/audio/video module Extron® AAP HDMI female to HDMI female on 10" pigtail single space insert	VG3	3½	-	⅝	421
	control/computer module Extron® AAP two USB A female to female barrels single space insert	VGR	3½	-	⅝	421
	usb charging module Extron® AAP Power Plate charging module 2 5 VCD USB power outlets 2.1 A / 10.5 watts of power for charging mobile devices single space insert	VGU	3½	-	⅝	815

specification codes example: ACS-SKU

series	**sku**
accessories A C S -	

Prices and Specifications
Prices and specifications are subject to change without notice. All prices quoted will be FOB our factories. If applicable, sales tax will be based on ship-to destination.

Bernhardt Design reserves the right to make changes in dimensions, construction, price lists, or product literature without prior notice.

All measurements and weights are approximate and subject to change without notice.

Order Entry
All orders are subject to final acceptance by Bernhardt Design in Lenoir, NC. Receipt of our acknowledgment indicates acceptance of your order subject to the terms set forth on the acknowledgment.

Bernhardt Design attempts to clarify all purchase orders. However, in the event the price list number and description on the purchase order differ, the price list number will prevail.

Changes/Cancellation
All orders in production are considered firm orders and are not subject to changes or cancellation.

Shipping
Bernhardt Design will ship in accordance with customer instructions whenever possible. For convenience, Bernhardt Design offers a guaranteed freight program (GFP). Bernhardt Design will exercise our best judgment in selecting a carrier under our GFP. When selecting a carrier, Bernhardt Design will make our best effort to meet requested delivery dates.

Transportation lead-times and delays including equipment problems, weather, general traffic, traffic accidents, customer warehouse space, labor disputes, customer changes, etc., that occur on a carrier will not be the responsibility of Bernhardt Design. Furthermore, Bernhardt Design will not be responsible for additional costs incurred due to aforementioned delays.

For customers who decline our GFP, Bernhardt Design will stage orders for pick up at 1% of the list price, or $75 minimum.

Customer orders in production will be shipped as scheduled and will not be held. Bernhardt Design reserves the right to make partial shipments on any order, unless notified otherwise by the customer.

High quality cartoning meeting trucking and railroad specifications is standard at no extra charge. Some items may be blanket wrapped for shipment.

Freight Damage and Claims
Bernhardt Design is not liable for any damages to products that occur during transit or storage. The carrier assumes all responsibility upon acceptance of product. It is the customer's responsibility to inspect products upon receipt and file any claims with the carrier. No product should be refused. If products are received damaged, a written exception should be made on the bill of lading and an immediate inspection be requested of the carrier.

Concealed damage must be reported to the carrier within 10 business days from date of delivery. Failure to make claims shall constitute acceptance of the products and waiver any claims of defects, errors or shortages. In the event delivery is made on a Bernhardt Design truck, the products should be carefully inspected for transit damage. If contents are damaged, the driver should be notified to call his dispatcher for immediate disposition.

Concealed damage must be reported within 10 business days from date of delivery and product/packaging held for inspection by a Bernhardt Design representative. Replacements for product damaged in shipment or storage will be manufactured upon receipt of a purchase order.

Returns
No merchandise may be returned to Bernhardt Design without written consent in the form of a Return Authorization from our Quality Assurance Department stating why item is being returned and how item will be shipped.

Unauthorized returns will be automatically refused by our receiving department as well as returns not in accordance with Bernhardt Design shipping instructions. Liability for defective merchandise shall be limited to the replacement or repair of that merchandise, and Bernhardt Design shall not be liable for other damages or losses.

Terms and Credit
Pricing and terms of sale apply to orders accepted by Bernhardt Design, and no terms, stipulations, or conditions contained in the dealer's submitted purchase orders shall have any force or effect. Bernhardt Design requires a completed and signed credit application from every dealer.

Bernhardt Design also requires dealers to provide a Blanket Certificate of Resale/Use containing valid sales tax exemption number(s) for their respective state(s).

If credit has been approved, the standard terms for all Bernhardt Design products are Net 30 from the invoice date. In certain instances, as an additional condition of order acceptance, buyer may be required to provide a deposit at time of order and/or remit the balance before shipment is released. If credit has not been approved, a 100% prepayment, including any freight charges, is required prior to production.

Acceptable forms of payment include a certified check or electronic bank transfer. For information on where to send check/electronic bank information contact our Financial Services Department. If a dealer or company check is submitted, three (3) weeks should be allowed for the clearance of the check. If electronic bank transfer is submitted, one (1) week should be allowed for the clearance of the electronic bank transfer. The order is subject to cancellation if payment in full is not received within three (3) weeks from the acknowledgment date.

The dealer may not make deductions for advertising, promotions, quality problems, freight, or any other reason without prior authorization by Bernhardt Design Such a deduction could result in the curtailment or suspension of further shipments until the matter is resolved.

Delinquency notices are generated and mailed periodically. Service charges of 18% per annum will be added to each past-due transaction. Unpaid service charges will be accrued and invoiced on a periodic basis. Past-due notices may result in orders being held until the situation is resolved.

This credit hold could prevent orders from being placed into production or shipped. Orders not in production that are placed on credit hold for three (3) weeks will be subject to cancellation.

Severe past-due situations may result in the employment of a collection agency or other collection litigation. If any collection activity is necessary regarding a dealer account, the dealer will be responsible for the payment of any and all attorney and collection agency fees.

A slow payment history may result in reducing or eliminating an open line of credit. At the discretion of Bernhardt Design, amounts owed by a dealer to Bernhardt Design arising from any transaction or dealings between the dealer and Bernhardt Design may be offset against any amounts owed to the dealer by Bernhardt Design.

Warranty
Bernhardt Design will repair or replace, at its discretion, any product or part thereof which fails as the result of defects in material and workmanship, under single shift use and normal care for five years from date of shipment. This warranty shall apply only to the original purchaser.

This warranty does not cover normal wear and tear, misuse or abuse of product, dramatic temperature changes, exposure to unusual conditions or damages incurred by contact with seating products, tables, desks or other surfaces. Natural color changes, variations or movements in lumber or veneer products, exposure to extreme temperature changes and direct sunlight may cause color changes and/or surface damage. These are circumstances beyond the control of Bernhardt Design and are not warranty issues. Repair or replacement of discontinued product will be at the discretion of Bernhardt Design.

This warranty is the customer's exclusive remedy for product defect and does not apply to damage caused by a freight carrier, dealer, installer, user modification, attachments to a product, or any third party. Bernhardt Design has the exclusive right to make the final determination of product misuse or abuse. Except as stated above, Bernhardt Design makes no express or implied warranties as to any product, and in particular, makes no warranty of merchantability or of fitness for any particular purpose. Bernhardt Design shall not be liable for any consequential or incidental damages or for commercial loss arising from any product defect.

Operational Parts Warranty
Drawer glides, drawer boxes, drawer pulls, and lock mechanisms have a Life-Time Warranty for original purchaser. Power and communication components are warranted for one year.

Parts Order
Bernhardt Design parts have a $25 net minimum per order. This does not include freight costs.

Custom Design
Bernhardt Design may alter products to meet specific needs. Contact your local sales representative when a custom design is needed. Custom designs,

if approved, require minimum quantities, additional leadtime and upcharges.
A custom job number, available from your Bernhardt Design sales representative, must be submitted with purchase orders. Orders combining custom design with standard product cannot be scheduled for production until custom items are approved. Custom design orders are not subject to revision or cancellation after acknowledgment.

Wood Finishes
Bernhardt Design tables are available in finishes that are compatible with credenzas and seating finishes. However, finishes on tables may vary slightly from those on seating due to the natural characteristics of the wood. No absolute match is implied or guaranteed.

Light Finishes
Bernhardt Design offers lighter finishes on certain veneers and solid woods. When specifying light finishes the natural characteristics of the wood will be visible and color will vary. Natural characteristics include the natural discolorations of the wood substance and color variations in glued up stock. These natural characteristics are not considered defects by Bernhardt Design, and therefore merchandise will not be replaced.

Special Finishes
Special finishes, made to customer specifications and subject to factory approval, may be available at a 10% net upcharge with a $500 net minimum.

Additional leadtime may be required for special finish items. Special finish orders will not be acknowledged until the special finish sample is approved in writing and received by Bernhardt Design Customer Service. Special finish orders are not subject to revision or cancellation after acknowledgment.

Installation and Maintenance
All freestanding tables and credenzas are equipped with leveling devices. Local floor conditions vary, and it is always necessary to properly adjust leveling devices. Proper leveling is essential to the alignment and function of doors and drawers.

Improperly leveled units result in misaligned doors and drawers and may impair locking mechanisms or other functional hardware. After the initial installation of credenzas, it may be necessary to readjust and align the units to compensate for settling. This should be expected as a matter of routine maintenance and follow-up to assure proper case function.

Proper installation of Bernhardt Design tables and credenzas is the responsibility of the dealer. Improperly installed units can result in permanent damage to case components. Damage due to improperly installed furniture not covered under product warranty.

Orders combining custom design with standard product cannot be scheduled for production until custom items are approved. Custom design orders are not subject to revision or cancellation after acknowledgment.

Care and Cleaning
Finished wood surfaces should be cleaned with a soft damp cloth, wiping in the direction of the grain. Furniture should be buffed dry immediately with a soft cloth.

Design and Patent Rights
All of the products shown in Bernhardt Design catalogs and described in Bernhardt Design price lists are, and remain, the property of Bernhardt Design, with the sole right reserved to manufacture and to distribute.

Some of the product designs shown are patented in the United States and will remain the property of Bernhardt Design. Any reproduction of the products constitutes an infringement of patented copyright laws and will be subject to prosecution.

Environmental
Some tables and credenzas are LEVEL® for ANSI/BIFMA e3-2019 – Furniture Sustainability Standard and SCS Indoor Advantage™ Gold certified. Visit the product page at bernhardtdesign.com for certifications.

BERNHARDT | design

Bernhardt Design is a registered trademark of
Bernhardt Furniture Company of Lenoir, NC.

Preferred Carrier Guaranteed Freight Rates

Freight charges will be applied to orders as a separate line item based on the zones listed. Rates are based on zones with a minimum for each zone. All zones are located within the Continental United States.

The freight amount is calculated on the total merchandise list COM price. Additional freight fuel surcharges may apply. Rates are based on deliveries made Monday through Friday, 8 am until 5 pm.

All orders are shipped by Bernhardt Design company trucks or preferred carriers specified by Bernhardt Design. **If a purchase order does not specify that the product must ship complete, Bernhardt Design reserves the right to select the most effective shipping method necessary, including split shipments.** Dealer warehouse information, including phone number and contact name, must be specified on the purchase order.

Direct site deliveries may be requested with an additional freight cost. Requests for direct site deliveries must be made 2 weeks prior to the scheduled ship week and meet the following criteria:

- Minimum of half truckload
- Delivery site accessible by a 53' trailer
- Complete delivery site address with contact name and on-site phone number
- Labor available for unloading

Deliveries that do not meet the criteria must be directed to a receiver warehouse. If a receiver warehouse is not available, the dealer may make arrangements with their own 3rd party carrier. If a 3rd party carrier is elected, a contact name, phone number and e-mail address is required.

Bernhardt Design has a no touch freight policy. Drivers are not allowed to unload freight.

Weekend direct site deliveries will incur a $500 per trailer weekend delivery fee. Weekend is defined as between 5 pm Friday and 8 am Monday.

Customers who decline GFP should refer to the shipping section of the Terms and Conditions page.

Zone	Percent	Minimum
Zone 1	3%	$150
Zone 2	4%	$150
Zone 3	5%	$150
Zone 4	5.5%	$150
Zone 5	6%	$150

Percent bases on List Price.

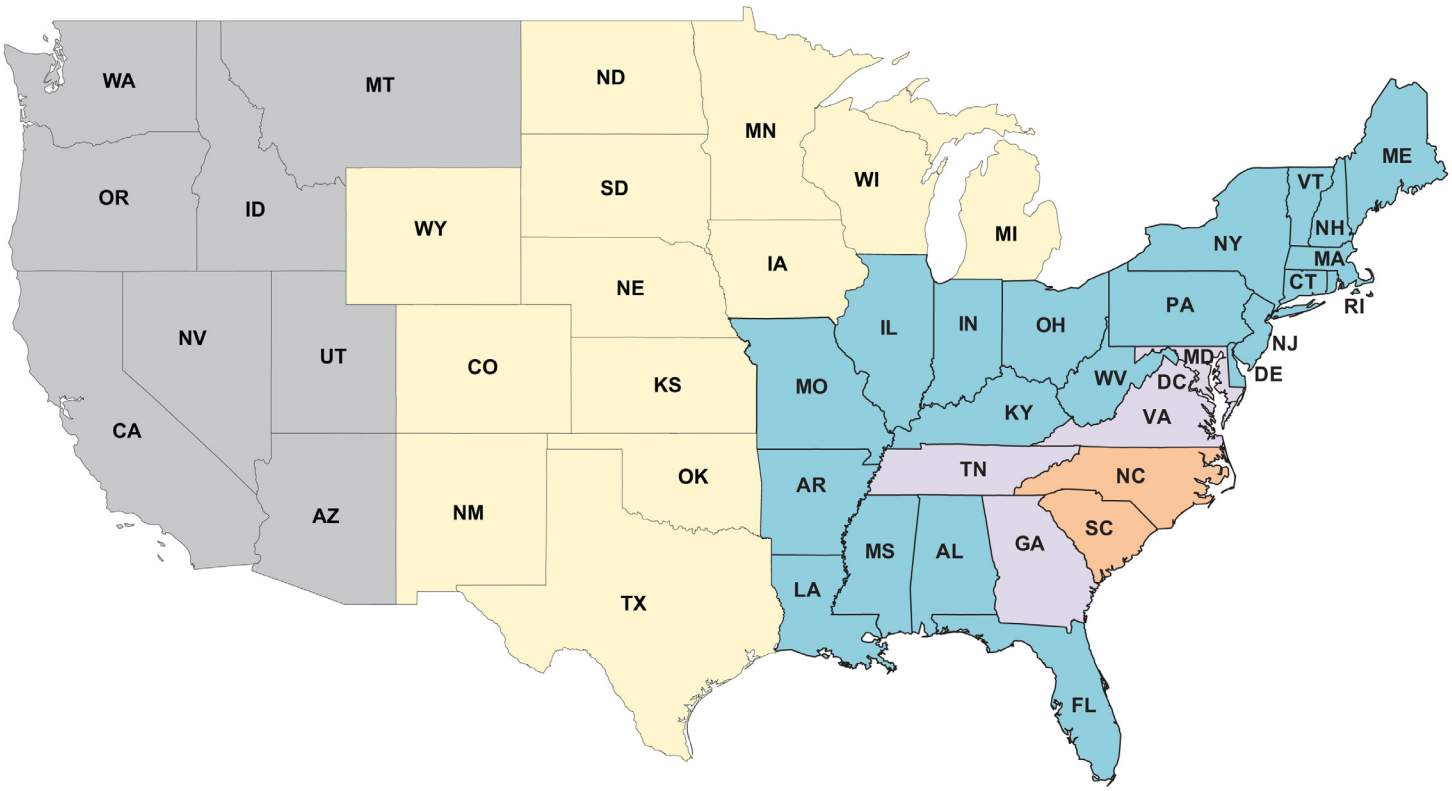

Preferred Carrier Guaranteed Freight Rates - Canada

Freight charges will be applied to orders as a separate line item based on the zones listed. Rates are based on zones with a minimum for each zone.

The freight amount is calculated on the total merchandise list COM price. Additional freight fuel surcharges may apply. Rates are based on deliveries made Monday through Friday, 8 am until 5 pm.

All orders are shipped by Bernhardt Design company trucks or preferred carriers specified by Bernhardt Design. **If a purchase order does not specify that the product must ship complete, Bernhardt Design reserves the right to select the most effective shipping method necessary, including split shipments.** Dealer warehouse information, including phone number and contact name, must be specified on the purchase order.

Direct site deliveries may be requested with an additional freight cost. Requests for direct site deliveries must be made 2 weeks prior to the scheduled ship week and meet the following criteria:

- Minimum of half truckload
- Delivery site accessible by a 53' trailer
- Complete delivery site address with contact name and on-site phone number
- Labor available for unloading

Deliveries that do not meet the criteria must be directed to a receiver warehouse. If a receiver warehouse is not available, the dealer may make arrangements with their own 3rd party carrier. If a 3rd party carrier is elected, a contact name, phone number and e-mail address is required.

Bernhardt Design has a no touch freight policy. Drivers are not allowed to unload freight.

Weekend direct site deliveries will incur a $500 per trailer weekend delivery fee. Weekend is defined as between 5 pm Friday and 8 am Monday.

Customers who decline GFP should refer to the shipping section of the Terms and Conditions page.

Zone	Minimums	Freight	Avg. Bus. Days
Zone 1	$200	5%	10 - 15
Zone 2	$200	9%	10 - 15
Zone 3	$200	8%	10 - 15
Zone 4	$200	11%	10 - 15
Zone 5	Quote	Quote	

The attached rates are strictly freight and do not include brokerage fees.

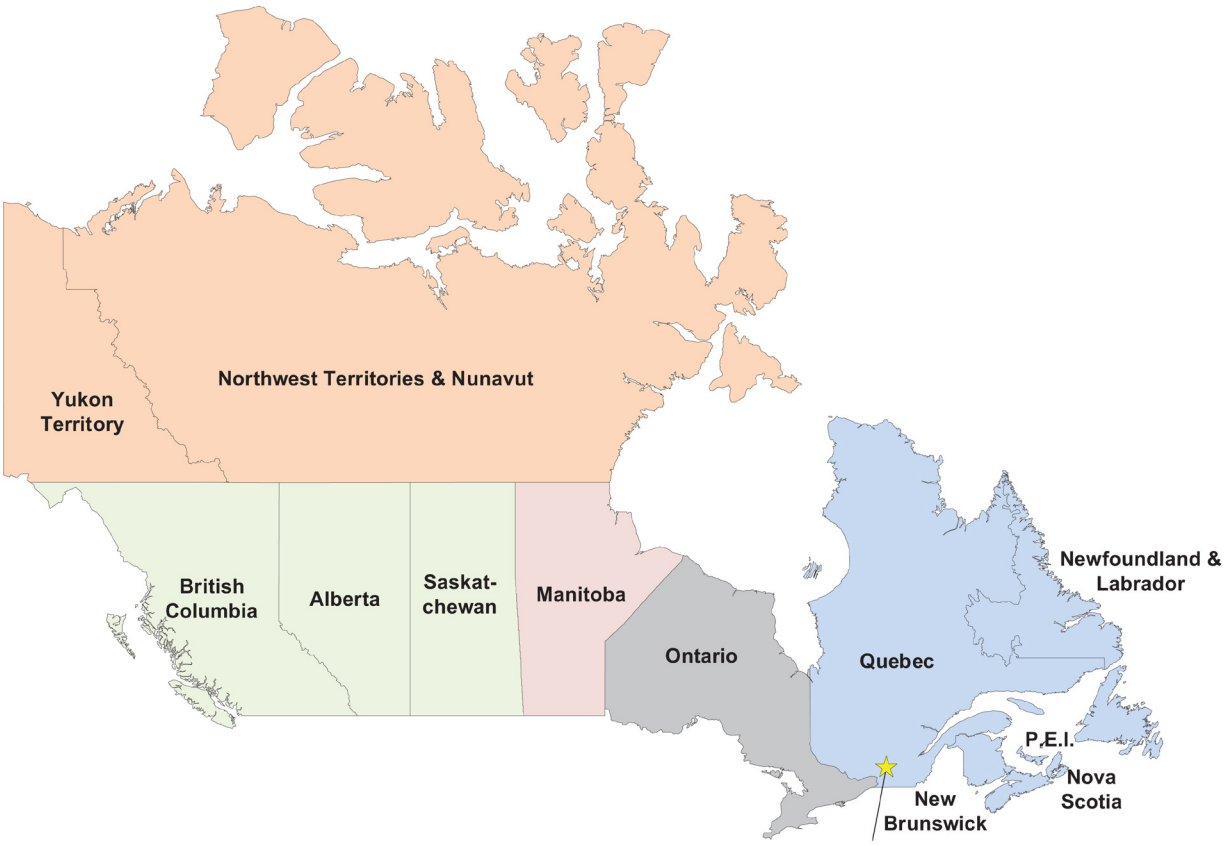

Greater Montreal Quebec Area (Postal Codes Starting with H) Freight is 5%