BERNHARDT | design

dillon training and meeting price list

august 2026

collection overview 3

laminate selections 4

veneer selections 5

standard finish + powder coat selections 6

design style + power finish selections 7

overview + configurations 8

c-base + storage 9

t-base + storage 10

t-base conference + storage 11

modesty panel + ganging brackets 12

power + configurations 13

power options 14

training tables 15

c-base edge mount 16

t-base edge mount 17

t-base inset 18

c-base inset teleconference 19

t-base inset teleconference 20

t-base inset half round 21

t-base inset paired half round 22

t-base inset conference 23

modesty panels + accessories 24-27

terms and conditions 28-29

guaranteed freight 30

guaranteed freight - canada 31

collection overview

Laminate Selections

A three character sku identifies each laminate selection as well as the standard finish offered. Individual components are priced with standard finish on standard laminate.

A variety of Wilsonart® standard laminates with standard finishes is offered on conference and multipurpose tables. Additional colors may be available but are subject to upcharges and extended lead times. The laminate option is available on components where noted as an option in the material specification code.

All laminate tops will have a 3mm matching edge band.

PLL Solid Laminate

Standard Solid

671 Designer White, Wilsonart D354-60 Matte Finish

672 Frosty White, Wilsonart 1573-60 Matte Finish

673 Fashion Grey, Wilsonart D381-60 Matte Finish

674 North Sea, Wilsonart D90-60 Matte Finish

675 Black, Wilsonart 1595-60 Matte Finish

Traceless Laminates - 20% Upcharge

665 Snow White Velvet, Wilsonart 15501-31 Traceless Laminate

666 Charcoal Velvet, Wilsonart 15504-31 Traceless Laminate

667 Black Velvet, Wilsonart 15505-31 Traceless Laminate

671

672

673

674

675

665 20% upcharge

666 20% upcharge

667 20% upcharge

WGL Woodgrain Laminate

Standard Woodgrain

684 Phantom Pearl, Wilsonart 8211K-28 Gloss Line Finish w/Aeon Scratch Resistant Protection

685 Raw Chestnut, Wilsonart 7975K-12 Soft Grain Finish w/Aeon Scratch Resistant Protection

686 High Line, Wilsonart 7970K-18 Linearity Finish w/Aeon Scratch Resistant Protection

678 New Age Oak, Wilsonart 7938-16 Casual Rustic Finish

679 Brazilwood, Wilsonart 7946-38 Matte Finish

687 Boardwalk Oak, Wilsonart 7983-38 Fine Velvet Finish

683 Portico Teak (Grey), Wilsonart 8210K-28 Gloss Line Finish

681 Studio Teak, Wilsonart 7960-16 Casual Rustic Finish

680 Walnut Heights, Wilsonart 7965K-12 Soft Grain Finish

682 Asian Night, Wilsonart 7949-16 Casual Rustic Finish

684

685

686

678

679

687

683

681

680

682

Veneer Selections

A three character sku identifies each species as well as the standard finish offered. Individual components are priced with standard finish. Special finishes on veneers made to customer specifications are subject to factory approval and a 10% net upcharge with a $500 net minimum.

Transparent stains and sealers are applied in multiple steps to enhance the beauty of the natural wood. A durable, baked-on, top-coat of conversion varnish or UV topcoat is applied to protect the product. It is recommended that felt, cork or fabric backed desk pads and accessories are used on worksurfaces to minimize wear.

When specifying light finishes the natural characteristics of the wood will be visible and color will vary. Paint finishes are available as custom orders. See terms and conditions for additional finish information.

OAK Oak
Rift Cut

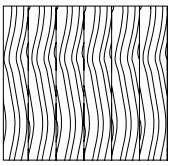

Standard Finish

871 870 839
837 860 861
865 836 866
872 805 845

OAK Select Finishes

M73 M72 M75
M74 M76 M77
M71

WLT Walnut
Flat Cut

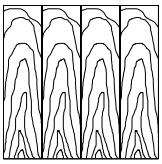

Standard Finish

872 861
870 823
860 866
839

OAK Oak

871

837

865

872

870

860

836

805

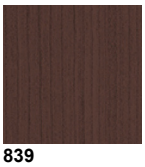
839

861

866

845

OAK Select Finishes

M73 Whitewash

M74 Fawn

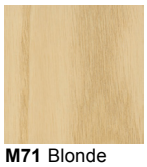
M71 Blonde

M72 Toast

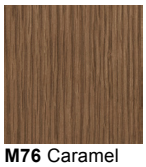
M76 Caramel

M75 Smoke

M77 Coffee

WLT Walnut

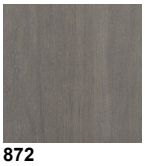
872

870

860

839

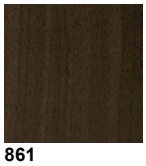
861

823

866

Standard Finishes

PA Polished Aluminum

Powder Coat Selections

A two character sku identifies each powder coat finish offered. Individual skus are priced with standard metal finish. Non-standard finishes may incur an additional charge.

Powder Coat Finishes

WH Satin White

AL Matte Aluminum

EC Ecru

LA Latte

GR Graphite

BZ Bronze

SG Sage

IG Iron Grey

RD Black Red

BK Matte Black

Optional Powder Coat Colors - RAL

- Lead Time - Three weeks additional lead-time after color approval
- Net Up-charge - $1000 for colors shown in Bernhardt Design RAL Powder Coat Selector
- Minimum Order Quantity - None
- Approval Sample Cost - None
- Combining Products - One up-charge is applicable for multiple products on a single purchase order when they are in the same color

Design Style Selections

Edge Styles Selections

FH 1" Flat Edge
Laminates and Veneer

RD 1" Round Solid Wood Edge
Veneer

Base Selections

Casters
2" Non-Marring Urethane Wheels,
2 Locking Casters

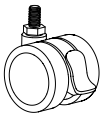

Glides
½ Height Adjustment Range

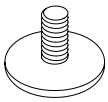

Note: White powder coat tables will get white casters.
All other colors will have black casters.

Power Finish Selections

Surface Mount Power (Dean)

BK Black
GY Grey
WH White

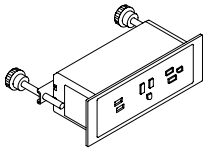

Under Mount Power (Minitap)

BK Black

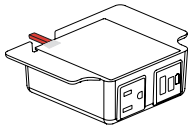

Dillon Tables

Dillon tables are designed for use in flexible environments requiring reconfiguration and easy storage. Table options include a rectangle, teleconference, and half-round table. Configurations include but are not limited to paired half rounds, teleconference, half round conference, and closed conference as shown on the right. Dillon table tops are 1" thick and available in either wood veneer and laminate. Grain will run the length of the table in veneer applications. Pre-installed ganging brackets are included for all tables.

The collection offers two styles of aluminum bases: T-base and C-base. T-base are positioned in the center of the table with either an edge or an inset mount that allows users to be seated on all sides of the table. The C-base is positioned at the front of the table with either an edge or inset mount that allows for users to sit on one side of the table only. Base styles are available with 2" heavy-duty casters with non-marring urethane wheels or adjustable leveling glides.

Aluminum bases are available as polished or in standard Bernhardt powder coat finishes.

Dillon power options include surface mount power and under mount power modules. A trough between bases provides a channel for wire management and electrical components. A removable cover located on the inside of the base provides wire management access and conceals cables.

Flip top tables fold and nest for compact storage. Pulling a handle, located underneath the tabletop, towards the front table edge releases the top to fold. A gas spring allows the top to rest gently when folding or closing. Fixed tops do not fold to nest or for storage.

An optional modesty panel is available in either aluminum, laminate or veneer. Aluminum modesty panels are available either in polished or in standard Bernhardt powder coat finishes.

SCS Indoor Advantage™ Gold and LEVEL® 2 certified. See terms and conditions for additional environmental information.

Configuration Options

Paired Half Round
Shown: 66" x 66" Tables

Teleconferencing Configuration
Shown: (1) Teleconference, (4) 30" x 60" Tables

Half Round Conference Configuration
Shown: (2) 30" x 72" Half Round, (4) 30" x 60" Tables

Closed Conference Configuration
Shown: (4) 42" x 84" Conference Tables

C-base Design

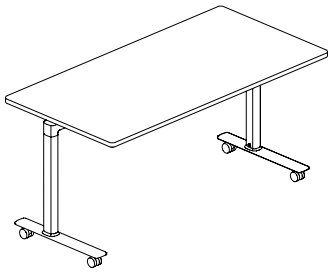

C-base Edge Mount

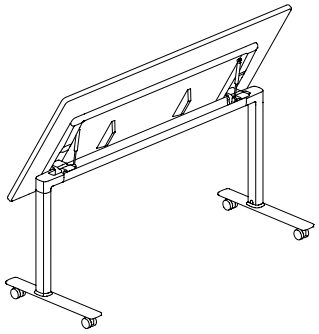

Storage Position User View C-base

C-bases are positioned in either an inset mount or an edge mount. The inset mount allows for guests to be seated on all fours sides of the table. The edge mount allows guests to be seated on one of the long sides of the table with an optional modesty panel installed on the opposite side. Finish selections for the C-base are polished aluminum or standard Bernhardt powder coat finishes.

The C-Base is available with either 2” heavy duty casters (2 locking, 2 non-locking) with non-marring urethane wheels or with adjustable leveling glides with a height adjustment range of ½”.

A trough between bases provides a channel for wire management and electrical components. A removable cover located on the inside of either base leg provides wire management access and conceals cables. An optional modesty panel may be used with C-bases. The modesty panel is hinged to swivel when stored. Specify modesty panels separately.

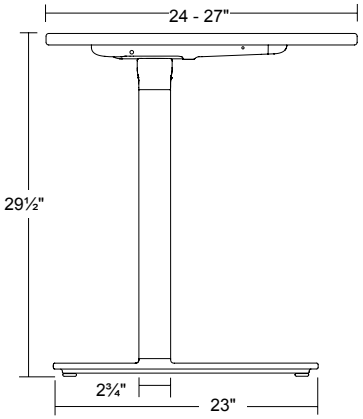

C-base with Glides

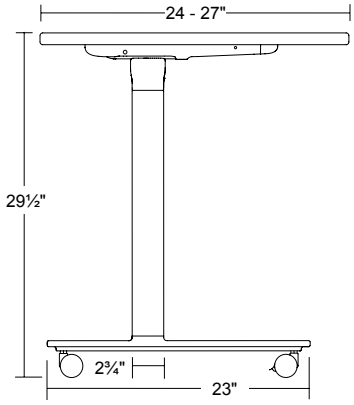

Mobile C-base with Casters

Tables are available with a folding or fixed top.

C-Base Storage

Dillon tables are designed to fold and nest for compact storage. The C-base design allows the top to be folded in an angled vertical position. When nested, each additional table adds only 9” depth and 3¼” width for storage. Pulling the pull bar/handle, located underneath the table top, towards the table edge releases the top to fold. A gas spring allows the top to rest gently when folding or closing.

Folded Position
End View with Optional Modesty Panel

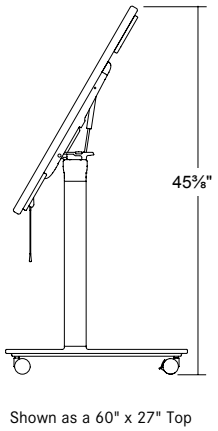

Shown as a 60" x 27" Top

Nested Storage Position
End View with Optional Modesty Panel

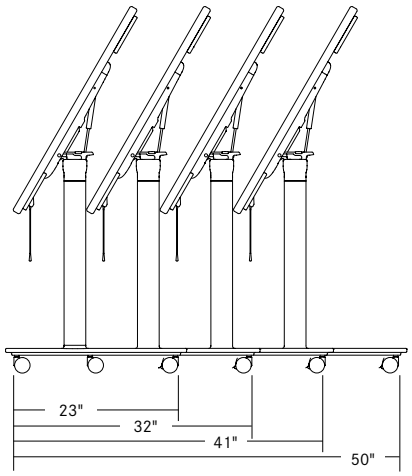

Nested Storage Position
Back View with Optional Modesty Panel

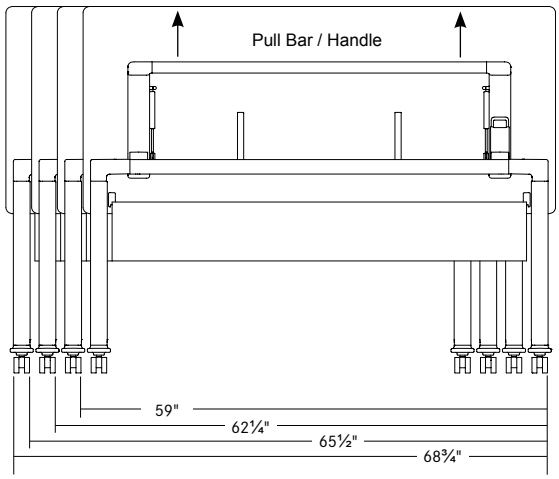

T-base Design

The T-bases are positioned in either an inset mount or an edge mount. The inset mount allows for guest to be seated on all four sides of the table. The edge mount allows guests to be seated on the two long sides of the table and is designed to provide maximum user leg space in ganging application. Finish selections for the T-base are polished aluminum or standard Bernhardt powder coat finishes.

The T-base is available with either 2” heavy duty casters (2 locking, 2 non-locking) with non-marring urethane wheels or with adjustable leveling glides with a height adjustment range of ½".

A trough between bases provides a channel for wire management and electrical components. A removable cover located on the inside of either base leg provides wire management access and conceals cables. An optional modesty panel may be used with T-bases. The modesty panel is hinged to swivel when stored. Specify modesty panels separately.

T-Base Storage

Dillon tables are designed to fold and nest for compact storage. The T-base design allows the top to be folded in a vertical position. When nested, each additional table adds only 5¼" depth and 3¼” width for storage. Pulling the pull bar/handle, located underneath the table top, towards the table edge releases the top to fold. A gas spring allows the top to rest gently when folding or closing.

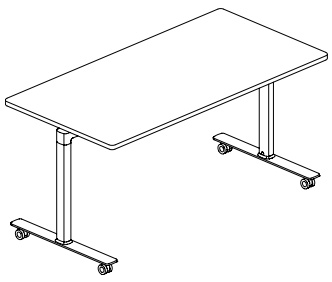

T-base Edge Mount

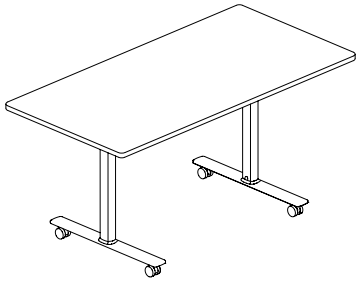

T-base Inset Mount

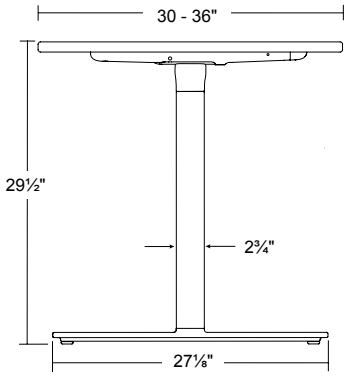

T-base with Glides

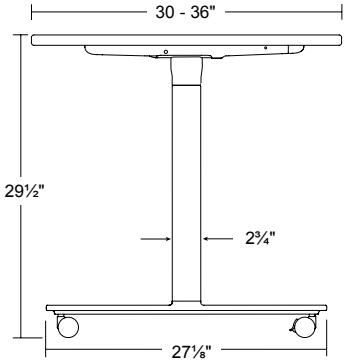

Mobile T-base with Casters

Tables are available with a folding or fixed top.

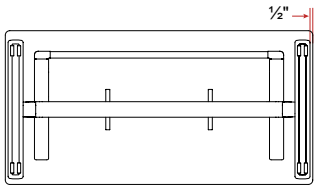

T-base Edge Mount Plan View
½" Edge to Base

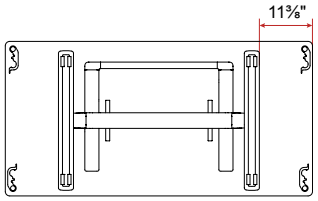

T-base Inset Mount Plan View
11⅜" Edge to Base

Folded Position
End View with Optional Modesty Panel

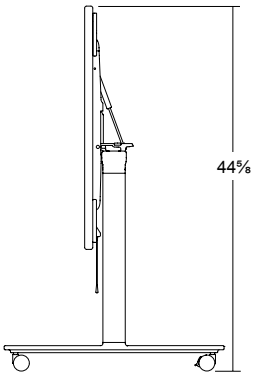

Shown as a 60" x 30" Top

Nested Storage Position
End View with Optional Modesty Panel

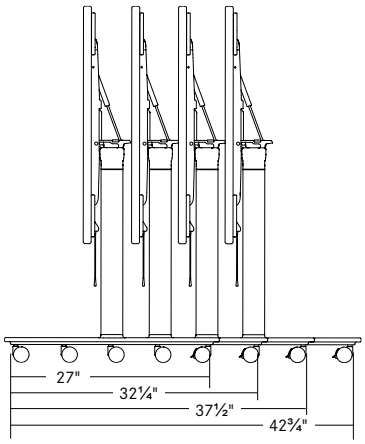

Nested Storage Position
Back View with Optional Modesty Panel

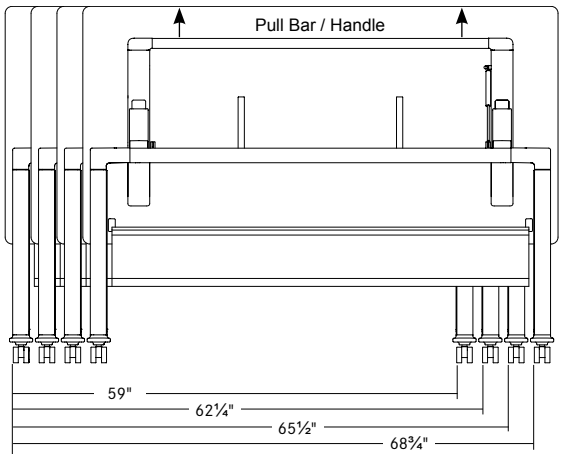

T-base Conference Design

The T-base conference tables are available with an inset mount that allows for guests to be seated on all four sides of the table. Finish selections for the T-base are polished aluminum or standard Bernhardt powder coat finishes.

The T-base is available with either 2" heavy duty casters (2 locking, 2 non-locking) with non-marring urethane wheels or with adjustable leveling glides with a height adjustment range of ½".

A trough between bases provides a channel for wire management and electrical components. A removable cover located on the inside of either base leg provides wire management access and conceals cables. An optional modesty panel may be used with T-bases. The modesty panel is hinged to swivel when stored. Specify modesty panels separately.

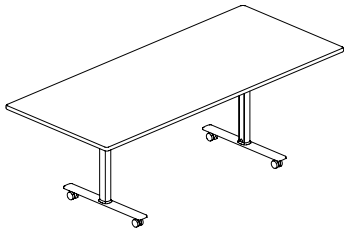

T-base Conference Inset Mount

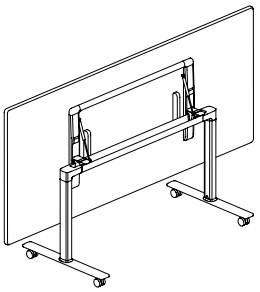

T-base Conference Inset Mount Stored Postion

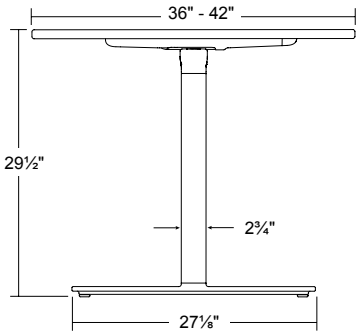

T-base Conference with Glides

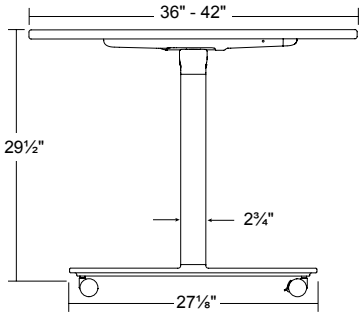

Mobile T-base Conference with Casters

Tables are available with a folding or fixed top.

T-Base Storage

Dillon tables are designed to fold and nest for compact storage. The T-base design allows the top to be folded in a vertical position. When nested each additional table adds only 5¼" depth and 3⅛" width for storage. Pulling the pull bar/handle, located underneath the table top, towards the table edge releases the top to fold. A gas spring allows the top to rest gently when folding or closing.

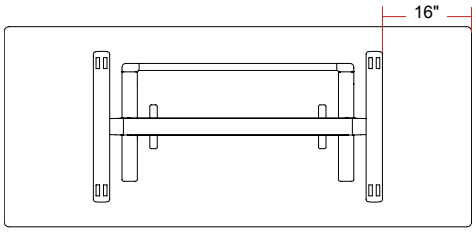

T-base Conference Inset Mount Plan View
16" Edge to Base

Folded Position
End View

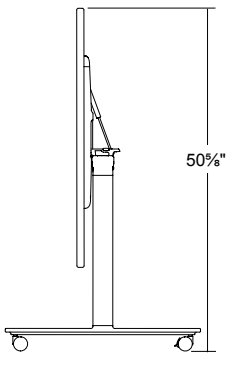

Shown as a 42" x 84" Top

Nested Storage Position
End View with Optional Modesty Panel

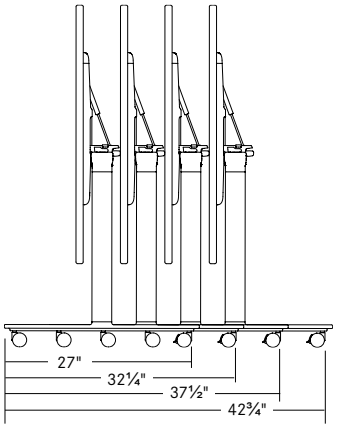

Nested Storage Position
Back View with Optional Modesty Panel

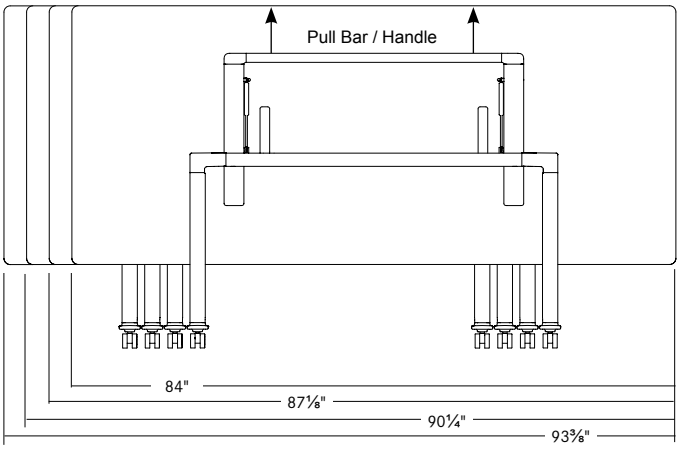

Modesty Panel

Dillon tables are available with a ¾" thick modesty panel in laminate and veneer or a ¼" thick, light weight bright anodized aluminum finish. Panels are 7½" high with the veneer running the length of the panel.

Modesty panels are easily installed and removed by the use of hanging in conjunction with pre-machined holes. The panel clips simply insert into the channel. The modesty panels are hinged to swivel for storage. All tables fold and store with the modesty panels installed.

Veneer modesty panels are available in oak or walnut. The aluminum modesty panel comes standard as bright anodized aluminum, Bernhardt powder coat finishes also available.

Hinged Modesty Panel
Laminate and Veneer

Grain direction follows arrow along length of panel

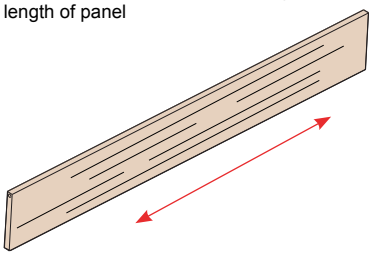

Hinged Modesty Panel
Anodized Aluminum

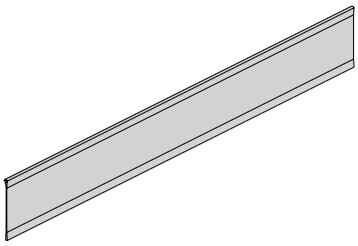

T-base with Modesty Panel

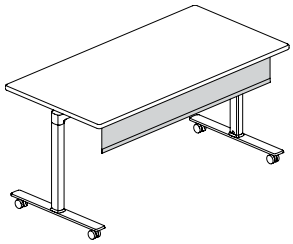

C-base with Modesty Panel

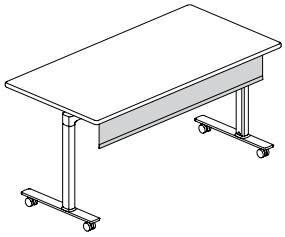

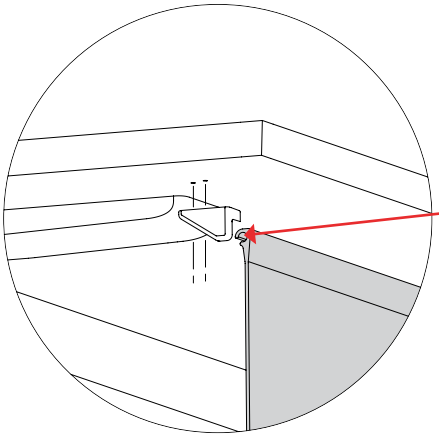

Attaching the Modesty Panel

Using (2) #8 wood screws, secure the modesty panel bracket to the underside of the table top.

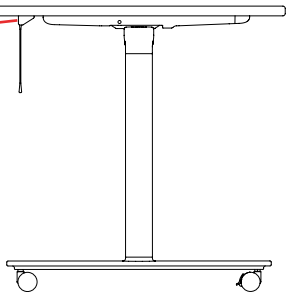

Ganging Bracket

Dillon tables feature (4) pre-installed ganging brackets making it easier to provide a secure method for connection tables. Position tables in desired grouping, with table ends touching, then connect the pre-installed ganging brackets. Tables can only be connected at table ends unless positioned with half-round or teleconference tables. Additional brackets can be purchased. See accessories for ordering information.

Ganged Bracket

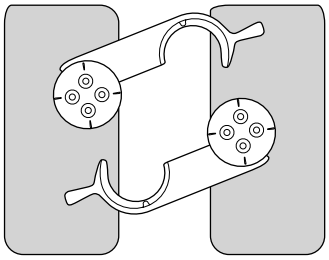

Power + Configurations

Under Mount Power (Minitap)

The under mount power solution allows for quick and easy power access, allowing for a maximum of (10) power units per 50' run length.

All table configurations begin with a starter table with a 9' power infeed.

Under mount power is available as dual and quad under mount power.

When specifying (2) dual under mount power modules a maximum of (5) tables can be daisy chained per 50' run.

Power source must be located within 6' of each starter table.

When using the corner configuration (short end to long end) additional jumpers must be ordered. See configurations below for examples and page 27 for ordering information.

Surface Mount Power (Dean)

Surface mount power solution allows for quick and easy power access, allowing for a maximum of (10) power modules per 50' run length.

All table configurations begin with a starter table with a 9' power infeed.

Surface mount power is available as single or dual modules. When specifying single surface mount power a maximum of (10) tables can be daisy chained per 50' run. When specifying double surface mount power a maximum of (5) tables can be daisy chained per 50' run.

Power source must be located within 6' of each starter table.

When using the corner configuration (short end to long end) additional jumpers must be ordered. See configurations below for examples and page 27 for ordering information.

Large Closed Conference Configuration - Dual Power

Includes: (2) starter and (6) add-on table assemblies.
Requires the customer to order (2) starter table assembllies,
and (2) additional jumpers.
Power: (16) under mount power modules.

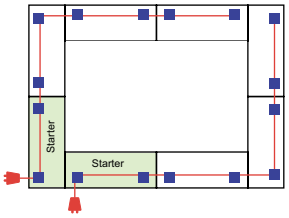

Classroom Seating - Dual Power

Includes: (1) starter and (4) add-on table assemblies.
Requires the customer to order (1) starter table assembly per row.
No additional jumpers needed.
Power: (10) under mount power modules.

Small Closed Conference - Dual Power

Includes: (1) starter and (3) add-on table assemblies.
Requires the customer to order (1) starter table assembly,
and (1) additional jumper.
Power: (8) under mount power modules.

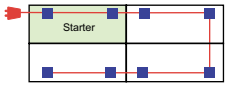

Large Closed Conference Configuration - Single Power

Includes: (1) starter and (7) add-on table assemblies.
Requires the customer to order (1) starter table assembly per row,
and (3) additional jumpers.
Power: (8) surface mount power modules.

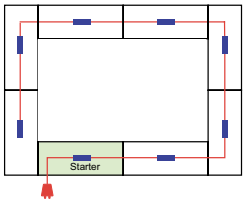

Classroom Seating - Single and Dual Power

Includes: (1) starter and (7) add-on table assemblies.
Requires the customer to order (1) starter table assembly per row.
No additional jumpers needed.
Power: (8) surface mount power modules.

Includes: (1) starter and (4) add-on table assemblies.
No additional jumpers needed.
Power: (10) surface mount power modules.

Small Closed Conference - Single Power

Includes: (1) starter and (7) add-on table assemblies.
Requires the customer to order (1) starter table assembly,
and (1) additional jumper.
Power: (8) surface mount power modules.

Power Options

For Surface Mount and Under Mount Grommet locations the following rules apply:

Starter Table | Power Source | Surface Power Module

Add-on Table | Jumper | Under Mount Power Module

Under Mount Power (Minitap) Grommet Locations/Codes

Under Mount offers two location options for under mount power grommet locations.

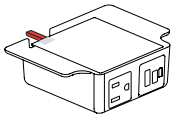

power + usb-a + usb-c
(1) 120v 60 Hz. 15 AMP Receptacles
(1) 2 AMP USB-A Port, 10 Watt
(1) 2 AMP USB-C Port, 20 Watt
Matte Black Finish

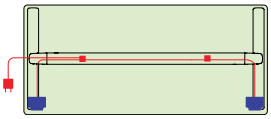

DUS Starter:
(2) Under Mount Power Modules
T-base Edge Mount Shown

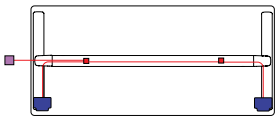

DUA Add-on:
(2) Under Mount Power Modules
T-base Edge Mount Shown

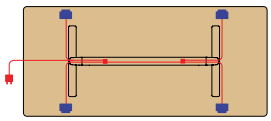

DU4
(4) Under Mount Power Modules
T-base Inset Shown
Stand Alone Table

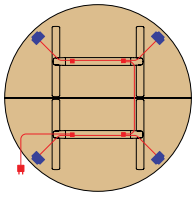

DU4
(4) Under Mount Power Modules
T-base Inset Shown
Stand Alone Table

Under mount power is certified to
UL STD 962 A CSA STD 22.2 No. 21.

Surface Mount Power (Dean) Grommet Locations/Codes

Dillon offers four options for surface power grommets locations. The exact placement code of the grommet must be specified on the purchase order and cannot be changed or added after an order is acknowledged and entered into production.

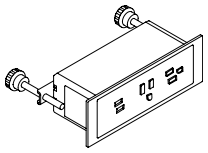

(2) 120v 60 Hz. 15 AMP Receptacles
(2) 2 AMP USB-C Port, 45 Watt
6½"w x 3"d x 2⅜"h
Specify Finish: Black, Grey or White

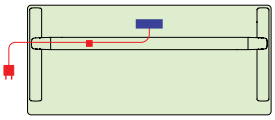

D1S Starter:
(1) Surface Mount Power, Back Center
C-base Edge Mount Shown

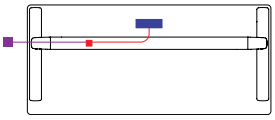

D1A Add-on:
(1) Surface Mount Power, Back Center
C-base Edge Mount Shown

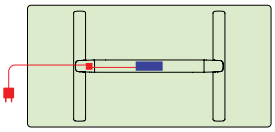

D2S Starter:
(1) Surface Mount Power, Center
T-base Inset Shown

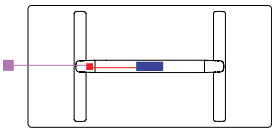

D2A Add-on:
(1) Surface Mount Power, Center
T-base Inset Shown

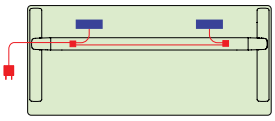

D3S Starter:
(2) Surface Mount Powers, Back
C-base Edge Mount Shown

D3A Add-on:
(2) Surface Mount Powers, Back
C-base Edge Mount Shown

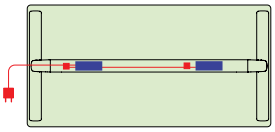

D4S Starter:
(2) Surface Mount Powers, Center
T-base Edge Mount Shown

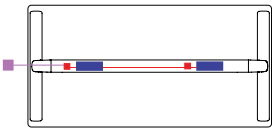

D4A Add-on:
(2) Surface Mount Powers, Center
T-base Edge Mount Shown

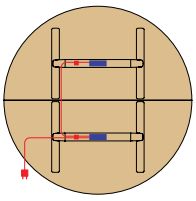

D2P
(2) Surface Mount Powers
T-base Inset Shown
Stand Alone Table

tables

c-base edge mount

available as a folding or fixed top table with aluminum base
base features casters or glides, specify base and top below
(4) pre-installed ganging brackets per table
under mount and surface mount power modules available
reference power option page for power grommet locations, then specify power option below.
specify modesty panel separately

c-base edge mount

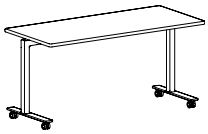

						PLL solid laminate **WGL** woodgrain laminate	**OAK** oak **WLT** walnut	
sku	w	d	h	weight		FH	FH	RD
YCA	48	24	29	80	D3S and D3A power not available	2666	3688	4131
YCB	54	24	29	85	D3S and D3A power not available	2774	3760	4212
YCC	60	24	29	90	D3S and D3A power not available	2884	3831	4291
YCD	66	24	29	95		2995	3904	4373
YCE	72	24	29	100		3105	3977	4455
YCM	48	27	29	90	D3S and D3A power not available	2995	3831	4291
YCN	54	27	29	95	D3S and D3A power not available	3089	3904	4373
YCO	60	27	29	100	D3S and D3A power not available	3178	3977	4455
YCP	66	27	29	105		3272	4048	4534
YCQ	72	27	29	110		3358	4120	4615

specification codes example: DLS-SKU-FHCFD1S

material + finish code example: BK PA PLL 671

series	sku	edge	base	power options	power finish	base finish	top material	top finish
dillon		**laminate and veneer tops** **FH** 1" flat edge **veneer tops only** **RD** 1" round hard edge	**CF** casters/ folding top **CN** castors/ fixed top **GF** glides/ folding top **GN** glides fixed top	**surface mount power - single** **D1S** starter: (1) surface power, back center + $1623 **D1A** add-on: (1) surface power, back center + $1365 **surface mount power - dual** **D3S** starter:(2) surface powers, back + $2678 **D3A** add-on: (2) surface powers, back + $2318 **under mount power - dual** **DUS** starter: (2) under mount modules + $1648 **DUA** add-on: (2) under mount modules + $1391 **000** none see power option pages	**surface only** **BK** black **GY** grey **WH** white **000** none / under mount	**PA** polished aluminum **see powder coat finishes** powder coat upcharge $275	**PLL** solid laminate **WGL** woodgrain laminate **OAK** oak **WLT** walnut	see finish pages
D L S -								

t-base edge mount

available as a folding or fixed top table with aluminum base
base features casters or glides, specify base and top below
(4) pre-installed ganging brackets per table
under mount and surface mount power modules available
reference power option page for power grommet locations, then specify power option below.
specify modesty panel separately

t-base edge mount

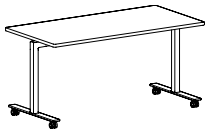

	sku	w	d	h	weight		**PLL** solid laminate **WGL** woodgrain laminate FH	**OAK** oak **WLT** walnut FH	RD
	YTH	48	30	29	90	D3S, D3A, D4S and D4A power not available	2995	3542	3968
	YTI	54	30	29	95	D3S, D3A, D4S and D4A power not available	3067	3615	4049
	YTJ	60	30	29	100	D3S, D3A, D4S and D4A power not available	3141	3688	4131
	YTK	66	30	29	105		3214	3760	4212
	YTL	72	30	29	110		3286	3831	4291
	YTM	48	36	29	95	D3S, D3A, D4S and D4A power not available	3208	3754	4205
	YTN	54	36	29	100	D3S, D3A, D4S and D4A power not available	3281	3827	4287
	YTO	60	36	29	105	D3S, D3A, D4S and D4A power not available	3358	3904	4373
	YTP	66	36	29	110		3431	3977	4455
	YTQ	72	36	29	115		3505	4048	4534
	YTR	78	36	29	120		3723	4269	4782

specification codes example: DLS-SKU-FHCFD1S

material + finish code example: BK PA PLL 671

series
dillon
D L S -

sku
- -

edge
laminate and veneer tops
FH 1" flat edge

veneer tops only
RD 1" round hard edge

base
CF casters/ folding top
CN castors/ fixed top
GF glides/ folding top
GN glides fixed top

power options
surface mount power - single
D1S starter: (1) surface power, back center + $1623
D1A add-on: (1) surface power, back center + $1365
D2S starter: (1) surface power, center + $1623
D2A add-on: (1) surface power, center + $1365

surface mount power - dual
D3S starter:(2) surface powers, back + $2678
D3A add-on: (2) surface powers, back + $2318
D4S starter: (2) surface powers, center + $2678
D4A add-on: (2) surface powers, center + $2318

under mount power - dual
DUS starter: (2) under mount modules + $1648
DUA add-on: (2) under mount modules + $1391

000 none

see power option pages

power finish
surface only
BK black
GY grey
WH white

000 none / under mount

base finish
PA polished aluminum

see powder coat finishes
powder coat upcharge $275

top material
PLL solid laminate
WGL woodgrain laminate
OAK oak
WLT walnut

top finish
see finish pages

t-base inset

available as a folding or fixed top table with aluminum base
base features casters or glides, specify base and top below
(4) pre-installed ganging brackets per table
inset distance: 11⅜"
under mount and surface mount power modules available
reference power option page for power grommet locations,, then specify power option below.
specify modesty panel separately

t-base inset

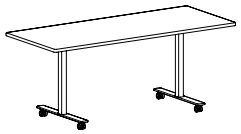

	sku	w	d	h	weight	**PLL** solid laminate **WGL** woodgrain laminate FH	**OAK** oak **WLT** walnut FH	RD
	YTW	60	30	29	100	3141	3688	4131
	YTX	66	30	29	105	3214	3760	4212
	YTY	72	30	29	110	3286	3831	4291
	YTS	60	36	29	110	3358	3904	4373
	YTT	66	36	29	115	3431	3977	4455
	YTU	72	36	29	120	3505	4048	4534
	YTV	78	36	29½	125	3723	4269	4782

specification codes example: DLS-SKU-FHCFD1S

series
dillon
D | L | S | -

sku
- | | | |

edge
laminate and veneer tops
FH 1" flat edge
veneer tops only
RD 1" round hard edge

base
CF casters/ folding top
CN castors/ fixed top
GF glides/ folding top
GN glides fixed top

power options
surface mount power - single
D1S starter: (1) surface power, back center + $1623
D1A add-on: (1) surface power, back center + $1365
D2S starter: (1) surface power, center + $1623
D2A add-on: (1) surface power, center + $1365
under mount power - dual
DUS starter: (2) under mount modules + $1648
DUA add-on: (2) under mount modules + $1391
000 none
see power option pages

material + finish code example: BK PA PLL 671

power finish
surface only
BK black
GY grey
WH white
000 none / under mount

base finish
PA polished aluminum
see powder coat finishes
powder coat upcharge $275

top material
PLL solid laminate
WGL woodgrain laminate
OAK oak
WLT walnut

top finish
see finish pages

c-base inset teleconference

available as a folding or fixed top table with aluminum base
base features casters or glides, specify base and top below
(4) pre-installed ganging brackets per table
inset distance: 11⅜"
under mount and surface mount power modules available
reference power option page for power grommet locations, then specify power option below.
specify modesty panel separately

c-base inset teleconference

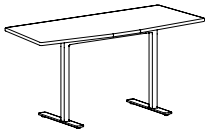

	sku	w	d	h	weight		**PLL** solid laminate **WGL** woodgrain laminate FH	**OAK** oak **WLT** walnut FH	RD
	YC1	64⅜	27	29	100	for use with 24"d or 27"d tables	3105	4048	4534
	YC2	70⅜	27	29	105	for use with 24"d or 27"d tables	3214	4120	4615
	YC3	76¼	27	29	110	for use with 24"d or 27"d tables	3322	4193	4697

specification codes example: DLS-SKU-FHCFD1S

material + finish code example: BK PA PLL 671

series	sku	edge	base	power options	power finish	base finish	top material	top finish
dillon D L S -	-	**laminate and veneer tops** **FH** 1" flat edge **veneer tops only** **RD** 1" round hard edge	**CF** casters/ folding top **CN** castors/ fixed top **GF** glides/ folding top **GN** glides fixed top	**surface mount power - single** **D1S** starter: (1) surface power, back center + $1623 **D1A** add-on: (1) surface power, back center + $1365 **under mount power - dual** **DUS** starter: (2) under mount modules + $1648 **DUA** add-on: (2) under mount modules + $1391 **000** none see power option pages	**surface only** **BK** black **GY** grey **WH** white **000** none / under mount	**PA** polished aluminum **see powder coat finishes** powder coat upcharge $275	**PLL** solid laminate **WGL** woodgrain laminate **OAK** oak **WLT** walnut	see finish pages

t-base inset teleconference

available as a folding or fixed top table with aluminum base
base features casters or glides, specify base and top below
(4) pre-installed ganging brackets per table
inset distance: 11⅜"
under mount and surface mount power modules available
reference power option page for power grommet locations, then specify power option below.
specify modesty panel separately

t-base inset teleconference

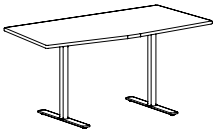

	sku	w	d	h	weight		**PLL** solid laminate **WGL** woodgrain laminate FH	**OAK** oak **WLT** walnut FH	RD
	YT1	65⅛	32	29	100	for use with 30"d tables	3358	3904	4373
	YT2	71⅛	32	29	105	for use with 30"d tables	3431	3977	4455
	YT3	77⅛	32	29	110	for use with 30"d tables	3505	4050	4536
	YT4	65⅞	36	29	105	for use with 30"d tables	3578	4120	4615
	YT5	71⅞	36	29	110	for use with 30"d tables	3651	4193	4697
	YT6	77¾	36	29	115	for use with 30"d or 36"d tables	3724	4266	4778
	YT7	83¾	36	29	120	for use with 30"d or 36"d tables	3941	4485	5024

specification codes example: DLS-SKU-FHCFD1S

material + finish code example: BK PA PLL 671

series	sku	edge	base	power options	power finish	base finish	top material	top finish
dillon D L S -	-	**laminate and veneer tops** **FH** 1" flat edge **veneer tops only** **RD** 1" round hard edge	**CF** casters/ folding top **CN** castors/ fixed top **GF** glides/ folding top **GN** glides fixed top	**surface mount power - single** **D1S** starter: (1) surface power, back center + $1623 **D1A** add-on: (1) surface power, back center + $1365 **D2S** starter: (1) surface power, center + $1623 **D2A** add-on: (1) surface power, center + $1365 **under mount power - dual** **DUS** starter: (2) under mount modules + $1648 **DUA** add-on: (2) under mount modules + $1391 **000** none see power option pages	**surface only** **BK** black **GY** grey **WH** white **000** none / under mount	**PA** polished aluminum **see powder coat finishes** powder coat upcharge $275	**PLL** solid laminate **WGL** woodgrain laminate **OAK** oak **WLT** walnut	see finish pages

t-base inset half round

available as a folding or fixed top table with aluminum base
base features casters or glides, specify base and top below
(4) pre-installed ganging brackets per table
inset distance: 18"
under mount and surface mount power modules available
reference power option page for power grommet locations, then specify power option below.
specify modesty panel separately

when round tables are needed, specify t-base inset paired half round table
see page 22 for additional information.

PLL solid laminate
WGL woodgrain laminate

OAK oak
WLT walnut

t-base inset half round

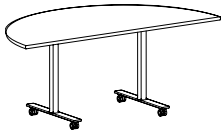

sku	w	d	h	weight		FH	FH	RD
YDA	78	39	29	110	for use with 30"d or 36"d tables	3105	4048	4534
YDB	72	36	29	105	for use with 30"d or 36"d tables	3214	4120	4615
YDC	66	33	29	100	for use with 30"d tables	3322	4193	4697

specification codes example: DLS-SKU-FHCFD1S

series
dillon
D L S -

sku
-

edge
laminate and veneer tops
FH 1" flat edge
veneer tops only
RD 1" round hard edge

base
CF casters/ folding top
CN castors/ fixed top
GF glides/ folding top
GN glides fixed top

power options
surface mount power - single
D1S starter: (1) surface power, back center + $1623
D1A add-on: (1) surface power, back center + $1365
D2S starter: (1) surface power, center + $1623
D2A add-on: (1) surface power, center + $1365
under mount power - dual
DUS starter: (2) under mount modules + $1648
DUA add-on: (2) under mount modules + $1391
000 none
see power option pages

material + finish code example: BK PA PLL 671

power finish
surface only
BK black
GY grey
WH white
000 none / under mount

base finish
PA polished aluminum
see powder coat finishes
powder coat upcharge $275

top material
PLL solid laminate
WGL woodgrain laminate
OAK oak
WLT walnut

top finish
see finish pages

t-base inset paired half round

available as a folding or fixed top table with aluminum base
base features casters or glides, specify base and top below
(4) pre-installed ganging brackets per table
inset distance: 18"
under mount and surface mount power modules available
reference power option page for power grommet locations, then specify power option below.

the paired specification ensures the veneers are
color matched and tagged noting they go together

PLL solid laminate
WGL woodgrain laminate

OAK oak
WLT walnut

t-base inset paired half round

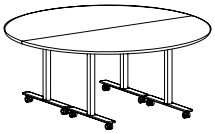

sku	w	d	h	weight	FH	FH	RD
YDF	66	66	29	200	6441	8052	9019
YDG	72	72	29	210	6489	8113	9087
YDH	78	78	29	220	6515	8139	9116

specification codes example: DLS-SKU-FHCFD1S

material + finish code example: BK PA PLL 671

series
dillon

D L S -

sku

- -

edge
laminate and veneer tops
FH 1" flat edge

veneer tops only
RD 1" round hard edge

base
CF casters/ folding top
CN castors/ fixed top
GF glides/ folding top
GN glides fixed top

power options
surface mount power - dual
D2P starter: (2) surface powers, center + $2678

under mount power - quad
DU4 starter: (4) under mount modulles + $2946

000 none

see power option pages

power finish
surface only
BK black
GY grey
WH white

000 none / under mount

base finish
PA polished aluminum

see powder coat finishes
powder coat upcharge $275

top material
PLL solid laminate
WGL woodgrain laminate
OAK oak
WLT walnut

top finish
see finish pages

t-base inset conference

available as a folding or fixed top table with aluminum base
base features casters or glides, specify base and top below
(4) pre-installed ganging brackets per table
inset distance: 16"
under mount and surface mount power modules available
reference power option page for power grommet locations, then specify power option below.

t-base inset conference

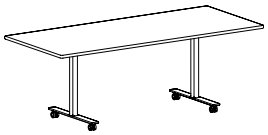

	sku	w	d	h	weight		**PLL** solid laminate **WGL** woodgrain laminate FH	**OAK** oak **WLT** walnut FH	RD
	EIA	84	36	29	130		3982	4465	5001
	EGB	72	42	29	125	D4S and D4A power not available	4074	4560	5108
	EHB	78	42	29	130	D4S and D4A power not available	4384	4907	5496
	EIB	84	42	29	135		4698	5257	5888
	EJB	90	42	29	140		5040	5745	6435

specification codes example: DLS-SKU-FHCFD1S

material + finish code example: BK PA PLL 671

series
dillon
D L S -

sku
- -

edge
laminate and veneer tops
FH 1" flat edge

veneer tops only
RD 1" round hard edge

base
CF casters/ folding top
CN castors/ fixed top
GF glides/ folding top
GN glides fixed top

power options
surface mount power - single
D2S starter: (1) surface power, center + $1623
D2A add-on: (1) surface power, center + $1365

surface mount power - dual
D4S starter: (2) surface powers, center + $2678
D4A add-on: (2) surface powers, center + $2318

under mount power - dual
DUS starter: (2) under mount modules + $1648
DUA add-on: (2) under mount modules + $1391

under mount power - quad
DU4 starter: (4) under mount modulles + $2946

000 none

see power option pages

power finish
surface only
BK black
GY grey
WH white

000 none / under mount

base finish
PA polished aluminum

see powder coat finishes
powder coat upcharge $275

top material
PLL solid laminate
WGL woodgrain laminate
OAK oak
WLT walnut

top finish
see finish pages

accessories

aluminum modesty panels

polished aluminum panel
mounting clips included
tops are premachined to locate panels
specify finish codes

	sku	w	d	h	weight	specifications	price
aluminum modesty panel	MHX	40⅝	¼	7½	4	use with 48"w T-base and C-base edge mount tables	$ 448
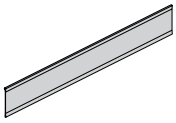	MHW	46⅝	¼	7½	5	use with 54"w T-base and C-base edge mount tables	448
	MHV	52⅝	¼	7½	5	use with 60"w T-base and C-base edge mount tables	488
	MHU	58⅝	⅛	7½	5	use with 66"w T-base and C-base edge mount tables	488
	MHT	64⅝	¼	7½	5	use with 72"w T-base and C-base edge mount tables	528
	MHS	70⅝	¼	7½	5	use with 78"w T-base edge mount tables	528
	MHM	31	¼	7½	4	use with 60"w T-base inset table, 60"w T-base and C-base inset teleconference,	407
	MHN	37	¼	7½	4	use with 66"w T-base inset table, 66"w T-base and C-base inset teleconference,	407
	MHO	43	¼	7½	5	use with 72"w T-base inset table, 72"w T-base and C-base inset teleconference,	448
	MHP	49	¼	7½	5	use with 78"w T-base inset table, 78"w T-base and C-base inset teleconference,	448
	MHJ	23	¼	7½	4	use with 66"w half round T-base tables	366
	MHK	29	¼	7½	4	use with 72"w half round T-base tables	407
	MHL	35	¼	7½	4	use with 78"w half round T-base tables	407

specification codes example: DLS-MFP

series
dillon
D | L | S | -

sku
| | | |

material + finish code example: PA

modesty panel finish
PA polished aluminum
powder coat upcharge $50
see powder coat finishes

| |

Laminate and Veneer modesty panels

installs with twist-lock panel clips
tops are premachined to locate panels
specify material and finish codes

	sku	w	d	h	weight	specifications	**PLL** solid laminate **WGL** woodgrain laminate	**OAK** oak **WLT** walnut
laminate and veneer modesty panel 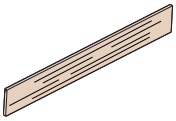	WHX	41	¾	7½	4	use with 48"w T-base and C-base edge mount tables	$ 718	$ 1499
	WHW	47	¾	7½	4	use with 54"w T-base and C-base edge mount tables	757	1554
	WHV	53	¾	7½	5	use with 60"w T-base and C-base edge mount tables	795	1608
	WHU	59	¾	7½	5	use with 66"w T-base and C-base edge mount tables	829	1640
	WHT	65	¾	7½	6	use with 72"w T-base and C-base edge mount tables	860	1712
	WHS	71	¾	7½	6	use with 78"w T-base edge mount tables	889	1783
	WHM	31¼	¾	7½	6	use with 60"w T-base inset table, 60"w T-base and C-base inset teleconference,	647	1404
	WHN	37¼	¾	7½	5	use with 66"w T-base inset table, 66"w T-base and C-base inset teleconference	733	1513
	WHO	43¼	¾	7½	6	use with 72"w T-base inset table, 72"w T-base and C-base inset teleconference,	757	1554
	WHP	49¼	¾	7½	6	use with 78"w T-base inset table, 78"w T-base and C-base inset teleconference,	795	1608
	WHJ	23¼	¾	7½	4	use with 66"w half round T-base tables	614	1346
	WHK	29¼	¾	7½	4	use with 72"w half round T-base tables	647	1404
	WHL	35¼	¾	7½	4	use with 78"w half round T-base tables	733	1513

specification codes example: DLS-SKU

series: dillon (D L S -)

sku: (-)

material + finish code example: WLT 839

top material:
PLL solid laminate
WGL woodgrain laminate
OAK Oak
WLT Walnut

top finish: see finish pages

	description	sku	w	d	h	weight	specifications	price
	cable clamp for underside of table (4) clips per package black finish	E5E	1	1	Δ	1		$ 83
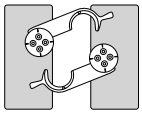	**ganging brackets** molded nylon kit of (4) brackets for each table	GNG	6½	2	⅝	1		210
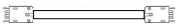	**jumpers**	When using the corner configuration (short end to long end) with surface or under mount power, jumpers must be ordered. Jumpers count towards run length, maximum of (10) modules per 50' run length. See page 13 for examples.						
	42" jumper - dual power	J42	42	1¼	1½	1	42" jumper for the pattern system	54
		Compatible table skus for surface or undermount power: YCA-YCQ YTH-YTV YDA-YDH YC1-YC3 YT1-YT7 YDA-YDH Includes (4) cable clamp clips, for underside of table, black finish.						
	72" jumper - dual power	J72	72	11¼	1½	1	72" jumper for the pattern system	92
		Compatible table sku for surface or undermount power: EIA-EJB Includes (6) cable clamp clips, for underside of table, black finish.						
	72" jumper - single power	J72	72	1¼	1½	1	72" jumper for the pattern system	92
		Compatible table skus for surface or undermount power: YCA-YCN YTH-YTI YTM YTW-YTT YC1-YC3 YT1-YT4 YDA-YDH Includes (6) cable clamp clips, for underside of table, black finish.						
	102" jumper - single power	J02	108	1¼	1½	1	102" jumper for the pattern system	131
		Compatible table skus for surface or undermount power: YCO-YCQ YTJ-YTL YTN-YTR YTU-YTV YT5-YT6 EIA-EJB Includes (8) cable clamp clips, for underside of table, black finish.						

specification codes example: ACS-SKU

A C S -

Prices and Specifications
Prices and specifications are subject to change without notice. All prices quoted will be FOB our factories. If applicable, sales tax will be based on ship-to destination.

Bernhardt Design reserves the right to make changes in dimensions, construction, price lists, or product literature without prior notice.

All measurements and weights are approximate and subject to change without notice.

Order Entry
All orders are subject to final acceptance by Bernhardt Design in Lenoir, NC. Receipt of our acknowledgment indicates acceptance of your order subject to the terms set forth on the acknowledgment.

Bernhardt Design attempts to clarify all purchase orders. However, in the event the price list number and description on the purchase order differ, the price list number will prevail.

Changes/Cancellation
All orders in production are considered firm orders and are not subject to changes or cancellation.

Shipping
Bernhardt Design will ship in accordance with customer instructions whenever possible. For convenience, Bernhardt Design offers a guaranteed freight program (GFP). Bernhardt Design will exercise our best judgment in selecting a carrier under our GFP. When selecting a carrier, Bernhardt Design will make our best effort to meet requested delivery dates.

Transportation lead-times and delays including equipment problems, weather, general traffic, traffic accidents, customer warehouse space, labor disputes, customer changes, etc., that occur on a carrier will not be the responsibility of Bernhardt Design. Furthermore, Bernhardt Design will not be responsible for additional costs incurred due to aforementioned delays.

For customers who decline our GFP, Bernhardt Design will stage orders for pick up at 1% of the list price, or $75 minimum.

Customer orders in production will be shipped as scheduled and will not be held. Bernhardt Design reserves the right to make partial shipments on any order, unless notified otherwise by the customer.

High quality cartoning meeting trucking and railroad specifications is standard at no extra charge. Some items may be blanket wrapped for shipment.

Freight Damage and Claims
Bernhardt Design is not liable for any damages to products that occur during transit or storage. The carrier assumes all responsibility upon acceptance of product. It is the customer's responsibility to inspect products upon receipt and file any claims with the carrier. No product should be refused. If products are received damaged, a written exception should be made on the bill of lading and an immediate inspection be requested of the carrier.

Concealed damage must be reported to the carrier within 10 business days from date of delivery. Failure to make claims shall constitute acceptance of the products and waiver any claims of defects, errors or shortages. In the event delivery is made on a Bernhardt Design truck, the products should be carefully inspected for transit damage. If contents are damaged, the driver should be notified to call his dispatcher for immediate disposition.

Concealed damage must be reported within 10 business days from date of delivery and product/packaging held for inspection by a Bernhardt Design representative. Replacements for product damaged in shipment or storage will be manufactured upon receipt of a purchase order.

Returns
No merchandise may be returned to Bernhardt Design without written consent in the form of a Return Authorization from our Quality Assurance Department stating why item is being returned and how item will be shipped.

Unauthorized returns will be automatically refused by our receiving department as well as returns not in accordance with Bernhardt Design shipping instructions. Liability for defective merchandise shall be limited to the replacement or repair of that merchandise, and Bernhardt Design shall not be liable for other damages or losses.

Terms and Credit
Pricing and terms of sale apply to orders accepted by Bernhardt Design, and no terms, stipulations, or conditions contained in the dealer's submitted purchase orders shall have any force or effect. Bernhardt Design requires a completed and signed credit application from every dealer.

Bernhardt Design also requires dealers to provide a Blanket Certificate of Resale/Use containing valid sales tax exemption number(s) for their respective state(s).

If credit has been approved, the standard terms for all Bernhardt Design products are Net 30 from the invoice date. In certain instances, as an additional condition of order acceptance, buyer may be required to provide a deposit at time of order and/or remit the balance before shipment is released. If credit has not been approved, a 100% prepayment, including any freight charges, is required prior to production.

Acceptable forms of payment include a certified check or electronic bank transfer. For information on where to send check/electronic bank information contact our Financial Services Department. If a dealer or company check is submitted, three (3) weeks should be allowed for the clearance of the check. If electronic bank transfer is submitted, one (1) week should be allowed for the clearance of the electronic bank transfer. The order is subject to cancellation if payment in full is not received within three (3) weeks from the acknowledgment date.

The dealer may not make deductions for advertising, promotions, quality problems, freight, or any other reason without prior authorization by Bernhardt Design Such a deduction could result in the curtailment or suspension of further shipments until the matter is resolved.

Delinquency notices are generated and mailed periodically. Service charges of 18% per annum will be added to each past-due transaction. Unpaid service charges will be accrued and invoiced on a periodic basis. Past-due notices may result in orders being held until the situation is resolved.

This credit hold could prevent orders from being placed into production or shipped. Orders not in production that are placed on credit hold for three (3) weeks will be subject to cancellation.

Severe past-due situations may result in the employment of a collection agency or other collection litigation. If any collection activity is necessary regarding a dealer account, the dealer will be responsible for the payment of any and all attorney and collection agency fees.

A slow payment history may result in reducing or eliminating an open line of credit. At the discretion of Bernhardt Design, amounts owed by a dealer to Bernhardt Design arising from any transaction or dealings between the dealer and Bernhardt Design may be offset against any amounts owed to the dealer by Bernhardt Design.

Warranty

Bernhardt Design will repair or replace, at its discretion, any product or part thereof which fails as the result of defects in material and workmanship, under single shift use and normal care for five years from date of shipment. This warranty shall apply only to the original purchaser.

This warranty does not cover normal wear and tear, misuse or abuse of product, dramatic temperature changes, exposure to unusual conditions or damages incurred by contact with seating products, tables, desks or other surfaces. Natural color changes, variations or movements in lumber or veneer products, exposure to extreme temperature changes and direct sunlight may cause color changes and/or surface damage. These are circumstances beyond the control of Bernhardt Design and are not warranty issues. Repair or replacement of discontinued product will be at the discretion of Bernhardt Design.

This warranty is the customer's exclusive remedy for product defect and does not apply to damage caused by a freight carrier, dealer, installer, user modification, attachments to a product, or any third party. Bernhardt Design has the exclusive right to make the final determination of product misuse or abuse. Except as stated above, Bernhardt Design makes no express or implied warranties as to any product, and in particular, makes no warranty of merchantability or of fitness for any particular purpose. Bernhardt Design shall not be liable for any consequential or incidental damages or for commercial loss arising from any product defect.

Operational Parts Warranty

Drawer glides, drawer boxes, drawer pulls, and lock mechanisms have a Life-Time Warranty for original purchaser. Power and communication components are warranted for one year.

Parts Order

Bernhardt Design parts have a $25 net minimum per order. This does not include freight costs.

Custom Design

Bernhardt Design may alter products to meet specific needs. Contact your local sales representative when a custom design is needed. Custom designs,

if approved, require minimum quantities, additional leadtime and upcharges.
A custom job number, available from your Bernhardt Design sales representative, must be submitted with purchase orders. Orders combining custom design with standard product cannot be scheduled for production until custom items are approved. Custom design orders are not subject to revision or cancellation after acknowledgment.

Wood Finishes

Bernhardt Design tables are available in finishes that are compatible with credenzas and seating finishes. However, finishes on tables may vary slightly from those on seating due to the natural characteristics of the wood. No absolute match is implied or guaranteed.

Light Finishes

Bernhardt Design offers lighter finishes on certain veneers and solid woods. When specifying light finishes the natural characteristics of the wood will be visible and color will vary. Natural characteristics include the natural discolorations of the wood substance and color variations in glued up stock. These natural characteristics are not considered defects by Bernhardt Design, and therefore merchandise will not be replaced.

Special Finishes

Special finishes, made to customer specifications and subject to factory approval, may be available at a 10% net upcharge with a $500 net minimum.

Additional leadtime may be required for special finish items. Special finish orders will not be acknowledged until the special finish sample is approved in writing and received by Bernhardt Design Customer Service. Special finish orders are not subject to revision or cancellation after acknowledgment.

Installation and Maintenance

All freestanding tables and credenzas are equipped with leveling devices. Local floor conditions vary, and it is always necessary to properly adjust leveling devices. Proper leveling is essential to the alignment and function of doors and drawers.

Improperly leveled units result in misaligned doors and drawers and may impair locking mechanisms or other functional hardware. After the initial installation of credenzas, it may be necessary to readjust and align the units to compensate for settling. This should be expected as a matter of routine maintenance and follow-up to assure proper case function.

Proper installation of Bernhardt Design tables and credenzas is the responsibility of the dealer. Improperly installed units can result in permanent damage to case components. Damage due to improperly installed furniture not covered under product warranty.

Orders combining custom design with standard product cannot be scheduled for production until custom items are approved. Custom design orders are not subject to revision or cancellation after acknowledgment.

Care and Cleaning

Finished wood surfaces should be cleaned with a soft damp cloth, wiping in the direction of the grain. Furniture should be buffed dry immediately with a soft cloth.

Design and Patent Rights

All of the products shown in Bernhardt Design catalogs and described in Bernhardt Design price lists are, and remain, the property of Bernhardt Design, with the sole right reserved to manufacture and to distribute.

Some of the product designs shown are patented in the United States and will remain the property of Bernhardt Design. Any reproduction of the products constitutes an infringement of patented copyright laws and will be subject to prosecution.

Environmental

Some tables and credenzas are LEVEL® for ANSI/BIFMA e3-2019 – Furniture Sustainability Standard and SCS Indoor Advantage™ Gold certified. Visit the product page at bernhardtdesign.com for certifications.

BERNHARDT | design

Bernhardt Design is a registered trademark of
Bernhardt Furniture Company of Lenoir, NC.

Preferred Carrier Guaranteed Freight Rates

Freight charges will be applied to orders as a separate line item based on the zones listed. Rates are based on zones with a minimum for each zone. All zones are located within the Continental United States.

The freight amount is calculated on the total merchandise list COM price. Additional freight fuel surcharges may apply. Rates are based on deliveries made Monday through Friday, 8 am until 5 pm.

All orders are shipped by Bernhardt Design company trucks or preferred carriers specified by Bernhardt Design. **If a purchase order does not specify that the product must ship complete, Bernhardt Design reserves the right to select the most effective shipping method necessary, including split shipments.** Dealer warehouse information, including phone number and contact name, must be specified on the purchase order.

Direct site deliveries may be requested with an additional freight cost. Requests for direct site deliveries must be made 2 weeks prior to the scheduled ship week and meet the following criteria:

- Minimum of half truckload
- Delivery site accessible by a 53' trailer
- Complete delivery site address with contact name and on-site phone number
- Labor available for unloading

Deliveries that do not meet the criteria must be directed to a receiver warehouse. If a receiver warehouse is not available, the dealer may make arrangements with their own 3rd party carrier. If a 3rd party carrier is elected, a contact name, phone number and e-mail address is required.

Bernhardt Design has a no touch freight policy. Drivers are not allowed to unload freight.

Weekend direct site deliveries will incur a $500 per trailer weekend delivery fee. Weekend is defined as between 5 pm Friday and 8 am Monday.

Customers who decline GFP should refer to the shipping section of the Terms and Conditions page.

Zone	Percent	Minimum
Zone 1	3%	$150
Zone 2	4%	$150
Zone 3	5%	$150
Zone 4	5.5%	$150
Zone 5	6%	$150

Percent bases on List Price.

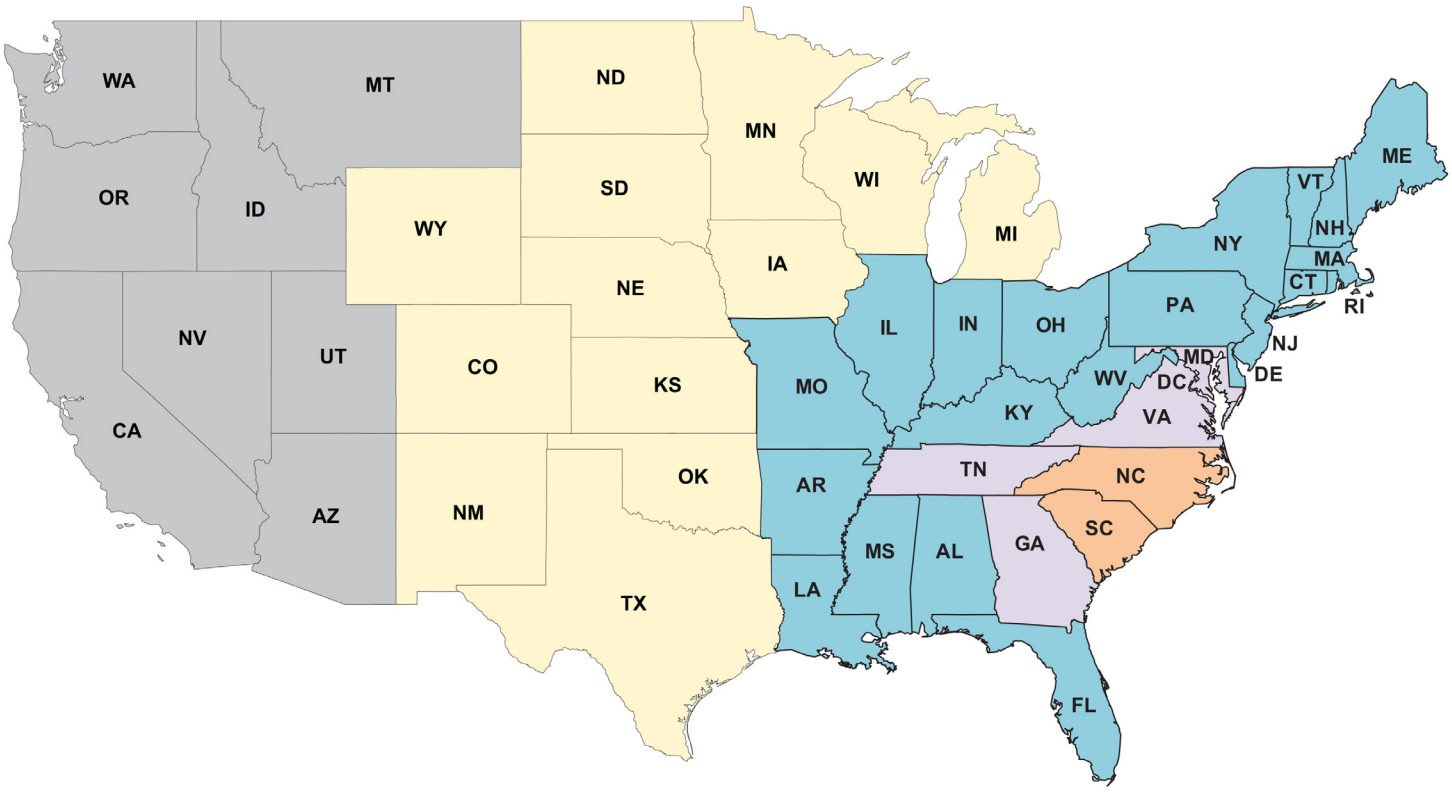

Preferred Carrier Guaranteed Freight Rates - Canada

Freight charges will be applied to orders as a separate line item based on the zones listed. Rates are based on zones with a minimum for each zone.

The freight amount is calculated on the total merchandise list COM price. Additional freight fuel surcharges may apply. Rates are based on deliveries made Monday through Friday, 8 am until 5 pm.

All orders are shipped by Bernhardt Design company trucks or preferred carriers specified by Bernhardt Design. **If a purchase order does not specify that the product must ship complete, Bernhardt Design reserves the right to select the most effective shipping method necessary, including split shipments.** Dealer warehouse information, including phone number and contact name, must be specified on the purchase order.

Direct site deliveries may be requested with an additional freight cost. Requests for direct site deliveries must be made 2 weeks prior to the scheduled ship week and meet the following criteria:

- Minimum of half truckload
- Delivery site accessible by a 53' trailer
- Complete delivery site address with contact name and on-site phone number
- Labor available for unloading

Deliveries that do not meet the criteria must be directed to a receiver warehouse. If a receiver warehouse is not available, the dealer may make arrangements with their own 3rd party carrier. If a 3rd party carrier is elected, a contact name, phone number and e-mail address is required.

Bernhardt Design has a no touch freight policy. Drivers are not allowed to unload freight.

Weekend direct site deliveries will incur a $500 per trailer weekend delivery fee. Weekend is defined as between 5 pm Friday and 8 am Monday.

Customers who decline GFP should refer to the shipping section of the Terms and Conditions page.

Zone	Minimums	Freight	Avg. Bus. Days
Zone 1	$200	5%	10 - 15
Zone 2	$200	9%	10 - 15
Zone 3	$200	8%	10 - 15
Zone 4	$200	11%	10 - 15
Zone 5	Quote	Quote	

The attached rates are strictly freight and do not include brokerage fees.

Greater Montreal Quebec Area (Postal Codes Starting with H) Freight is 5%