Delivery Fit Guide

Ensure your Nick Scali piece fits perfectly by identifying obstacles before delivery.

nickscali

Congratulations! You may be about to purchase the Nick Scali piece of your dreams or you already have!

Before your 48 hour cooling off period is over, it's important you have checked we can deliver to you. These handy hints will help you to ensure that your sofa will fit your living space and most importantly, through the door!

Common fit issues

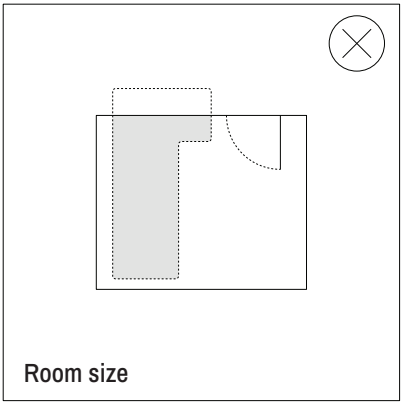

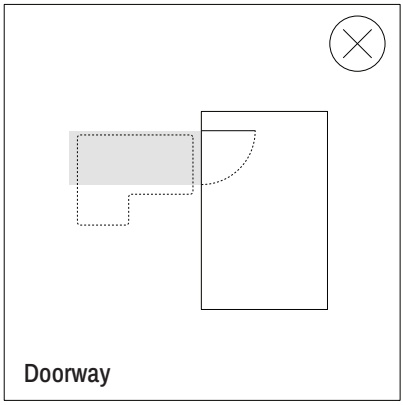

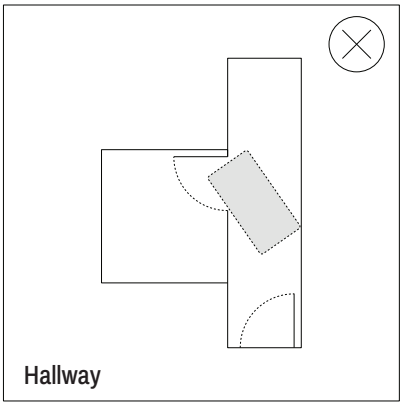

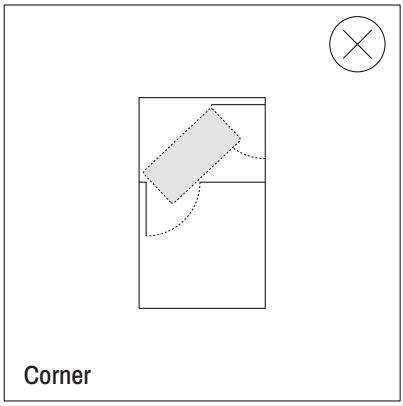

Know your furniture & packaging dimensions

Make note of the dimensions of your piece or sofa (they can be found on the product online).

If you are choosing a modular sofa, note the overall dimensions of the pieces assembled.

Please ensure all the packages can pass through:

- doorways and hallways
- stairwells and elevators
- tight corners and turns inside the home
- entry gates and pathways

Important: Some 3-seater and even 4-seater lounges are delivered in a single piece. This means you must confirm the lounge can be manoeuvred around corners and into the room, not just through the front door. Taking a few minutes to measure your access areas helps avoid delivery delays or additional charges.

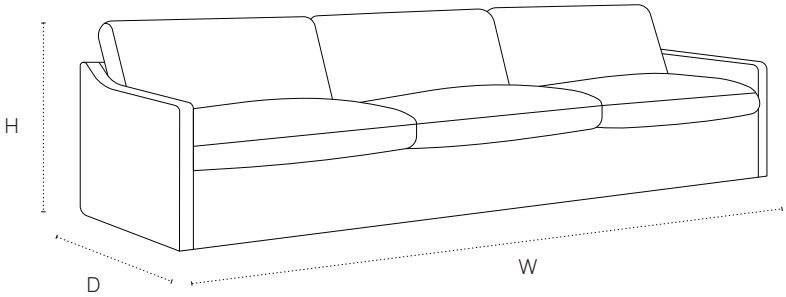

Product		**Package 1**		**Package 2**	
Width	W.....	**Width**	W.....	**Width**	W.....
Depth	D.....	**Depth**	D.....	**Depth**	D.....
Height	H.....	**Height**	H.....	**Height**	H.....

Helpful tip: Use masking tape or newspaper to lay out the size of your sofa so you can see if it will fit in the space you want it to. If you are happy with the amount of floorspace the sofa takes up, consider also the height of the sofa. Will the height of the back cushions and arms sit well with your other furniture?

Doorways & corners

Measure the inner width, height, and diagonal of your front door and every doorway along the delivery path with doors fully open to ensure the piece can navigate safely to its final destination **before you place your order. Allowing a few centimetres extra to cater for packaging either side.**

If the width is too narrow, then your piece or sofa may need to be carried through upright. So make sure the height of your doorway is greater than your sofa width.

Important:

Some 3-seater and even 4-seater lounges are delivered in a single piece. This means you must confirm the lounge can be manoeuvred around corners and into the room, not just through the front door. Taking a few minutes to measure your access areas helps avoid delivery delays or additional charges.

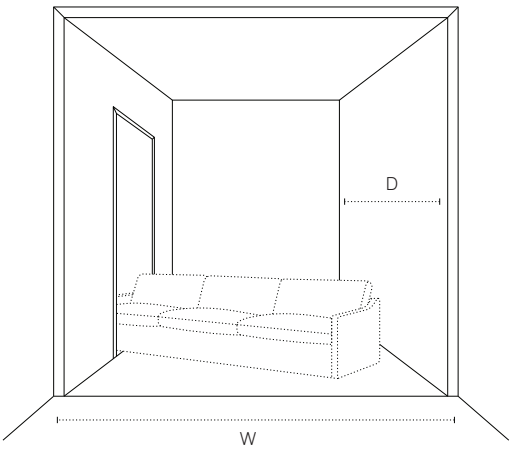

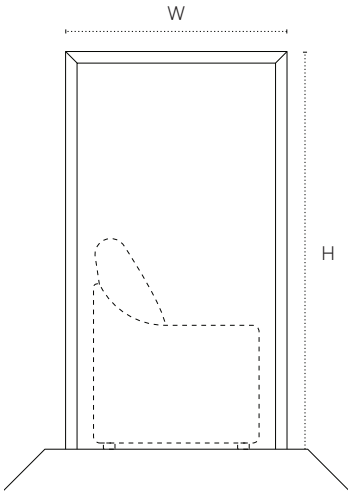

Doorway W..... H.....

Hallway W..... D.....

Corner W..... D.....

Stairways

Measure width at the narrowest point and check ceiling clearance from both top and bottom steps.

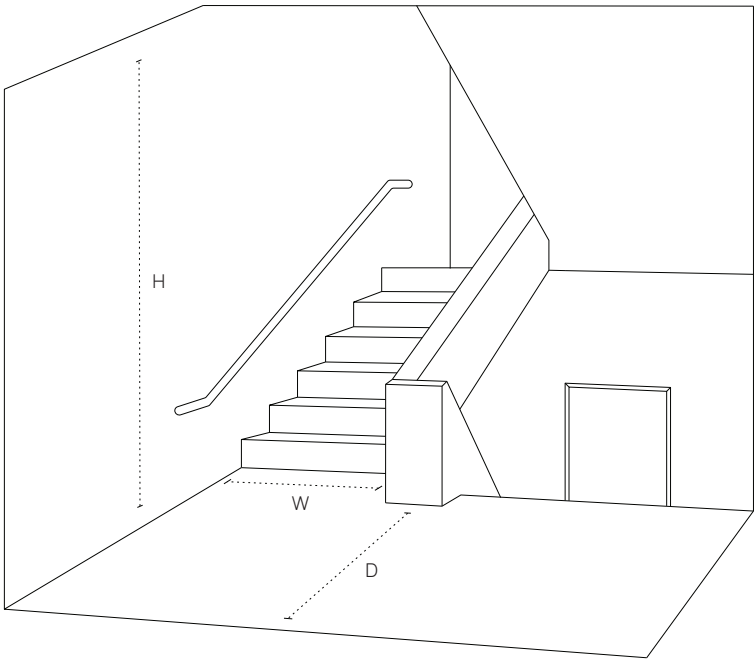

Width W.....

Height H.....

Depth D.....

Elevator

Verify door width/height and internal depth/diagonal to ensure the piece can fit upright or tilted.

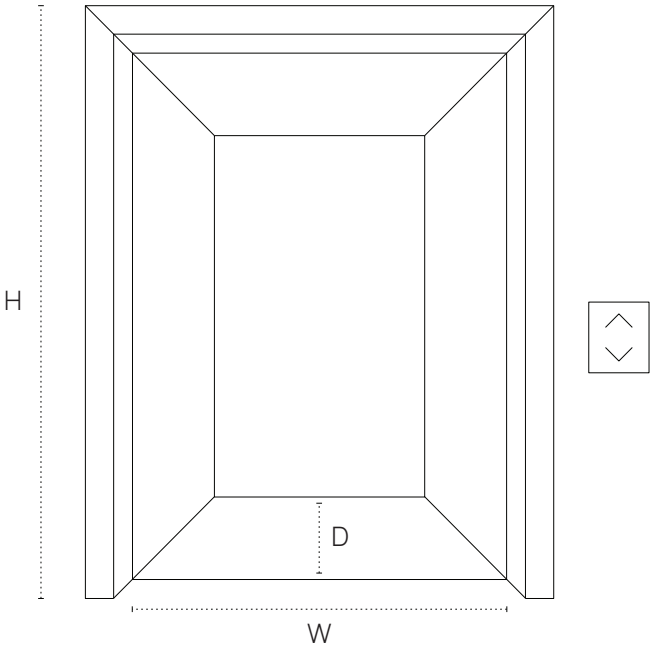

Width W .....

Height H .....

Depth D .....

On the day of delivery

Ensure a smooth delivery by clearing a direct path and removing fragile items, as you are responsible for confirming property access and fit to avoid additional fees.

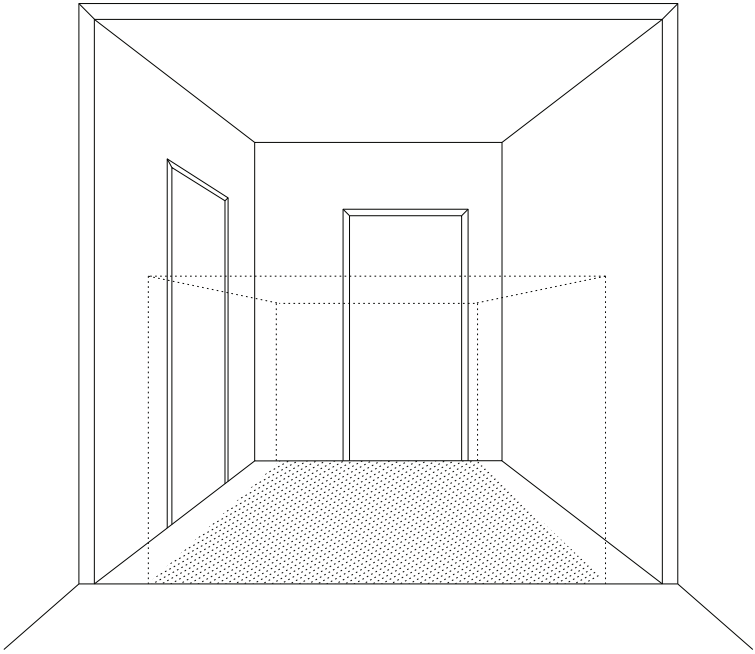

Things to note

By purchasing you agree to the following conditions regarding delivery:

Day of delivery

- You're responsible to ensure furniture purchased can be delivered and placed in your home through a regular delivery process.
- You accept responsibility that your furniture will fit into the lift and the room for which it is intended. If it will not additional fees will apply and you will need to call **1300 220 809** to discuss.
- You're responsible to ensure someone will be at the premises to accept delivery and we have the correct phone number of the person accepting delivery on the day.
- If your furniture is required to be carried up **more than 2 flights of stairs**, additional charges will apply. Delivery after the first two flights of stairs will incur a **$25 additional fee per flight of stairs**.
- Any issues encountered on the day of delivery could result in additional fees or require items to be redelivered another day which will incur additional delivery fees.

Packaging

- You understand that packaging and wrapping will be left at the delivery address. Customers will need to recycle the packaging and wrapping which is mostly cardboard and plastic.

Contractors, Special Deliveries & Assembly

- Nick Scali takes no responsibility for any extra contractors needed to deliver furniture to the nominated address.
- If a balcony lift is required it is the customer's responsibility to organise.
- Nick Scali does not deliver on weekends.
- Accept any additional charges for the possible disassembly & reassembly necessary for delivery access to the premises designated for delivery.
- Understand that not all lounges are able to be disassembled and this would need to be confirmed prior to delivery access requirements, the fee for this service is dependent on the lounge configuration & would require an independent 3rd party evaluation and payable directly to the contractor and not to Nick Scali Furniture.
- Nick Scali Furniture takes no responsibility for the services carried out by a 3rd party contractor for the Disassembly or Reassembly services.

Contact us:

For any further questions please contact our despatch team (for order support) or concierge team (for product enquiries) on **1300 220 809**.