HEAT SEALED POWDER COATED OR STAINLESS STEEL ENT SCOPE & BRONCHOSCOPE STORAGE CABINETS AND DRYING CABINETS

30" High ENT Scope and Small Scope Models:
SCW2430DR | SCW2430DRE
SCW2430DRDP | SCW2430DREDP

48" High Bronchoscope Models:
SCW2448DR | SCW2448DRE
SCW2448DRDP | SCW2448DREDP

PART# MAN-SCW/BRONC

DATE ISSUED:
January 2026

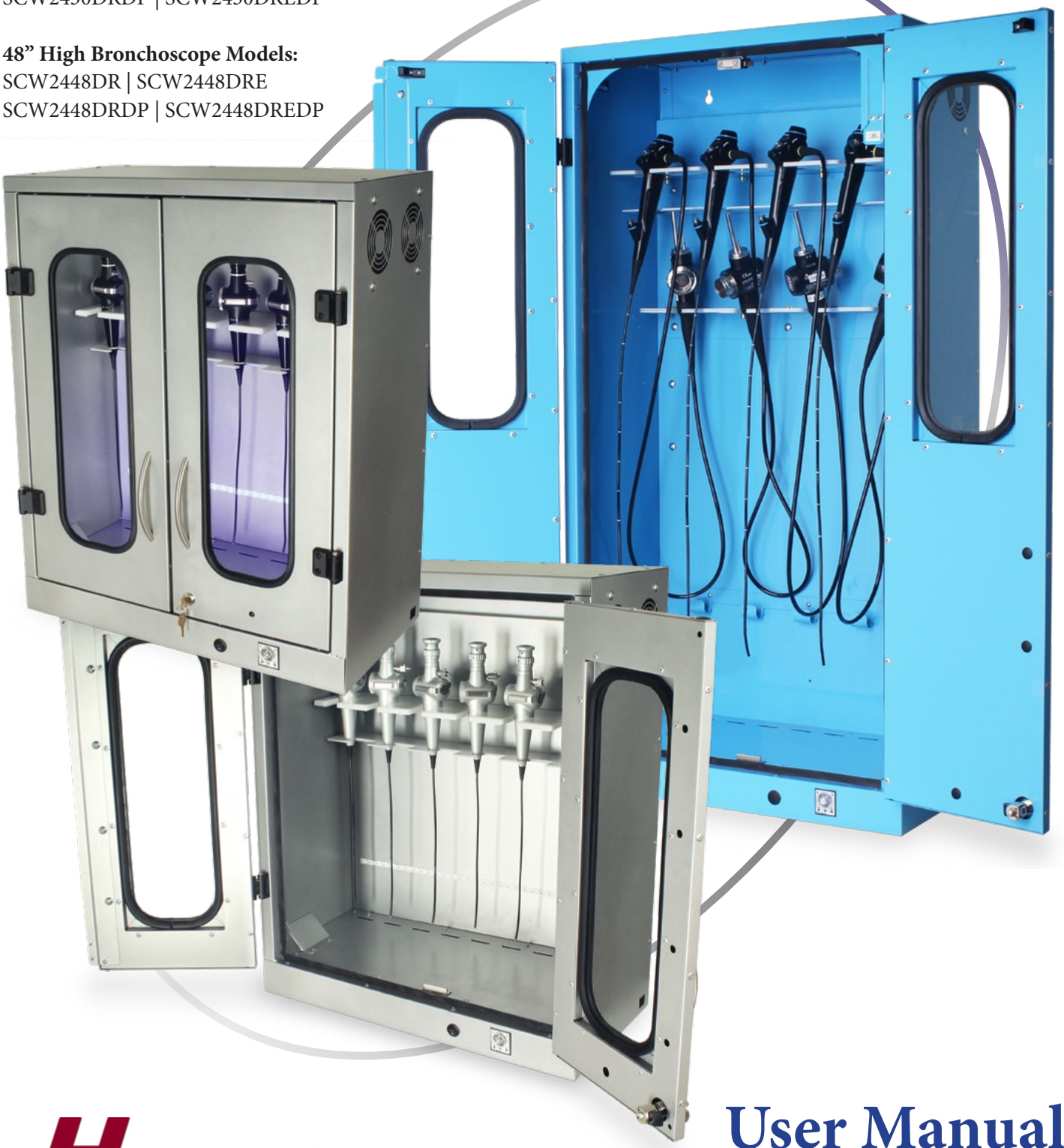

HARLOFF
CLINICAL STORAGE BY CAPSA HEALTHCARE

User Manual & Instruction Guide

Table of Contents

Contents of Package 3

Identifying the SCW2430 Cabinet 4

Identifying the SCW2448 Cabinet 5

Scope Cabinet Features 6

Installing the Scope Cabinet 7

Operation of the Drying Package 8

How to Replace the Filters 9

Electronic Components 10

Internal Wire Diagram 11

Cabinet Basic Care 12

Contents of Package

Drying Package (DP) Models Only

Medical Grade Power Cord 6 ft. [1.83 meter]

***Optional* 10 ft. [3.05 meter] cord is also available (Part # EXTCORD10)**

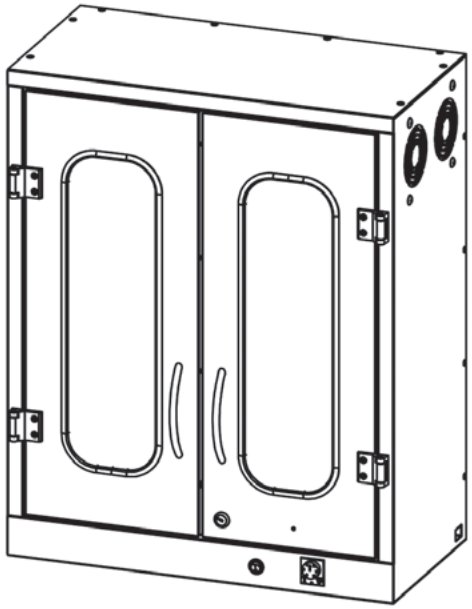

The power cord plug is located in the lower right corner of your cabinet's right side.

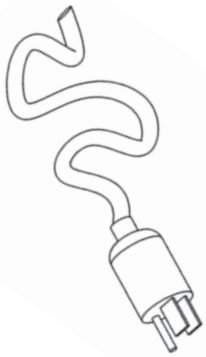

Harloff only uses electronic components that are certified to CSA and UL standards.

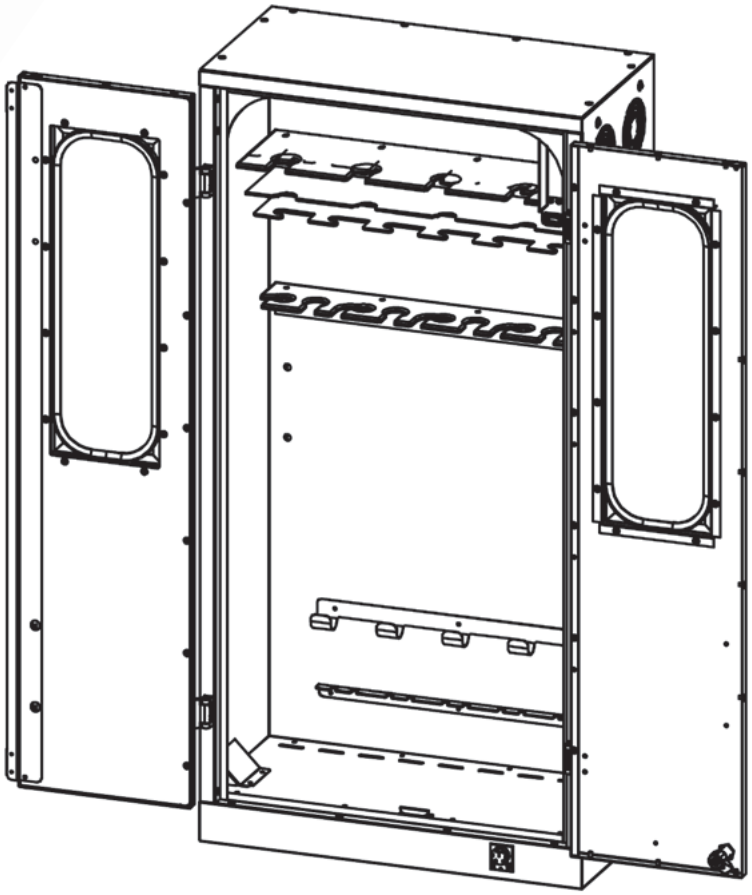

Contents:

- Scope Support Arms (Installed)
- 1x Medical Grade Power Cord
- 1x AC/DC Power Adapter Brick
- Cord approved for use in US & Canada

Identifying the SCW2430 Cabinet

Left Side

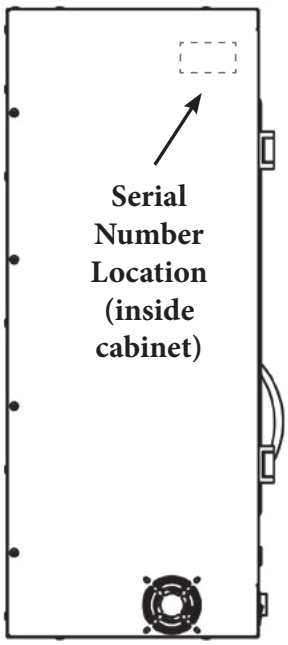

Front

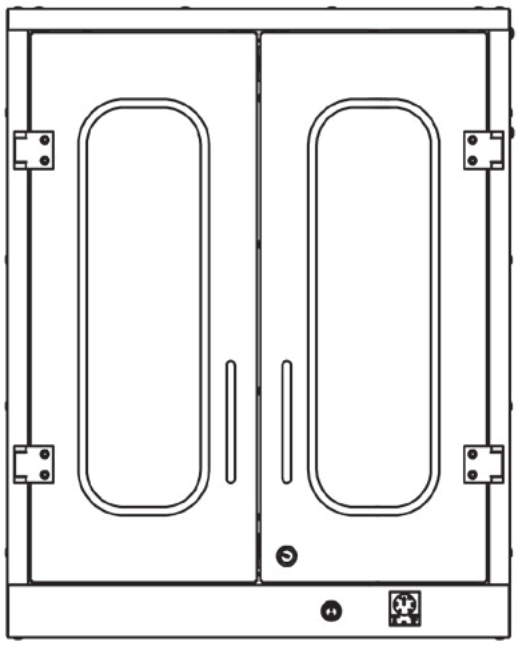

Right Side

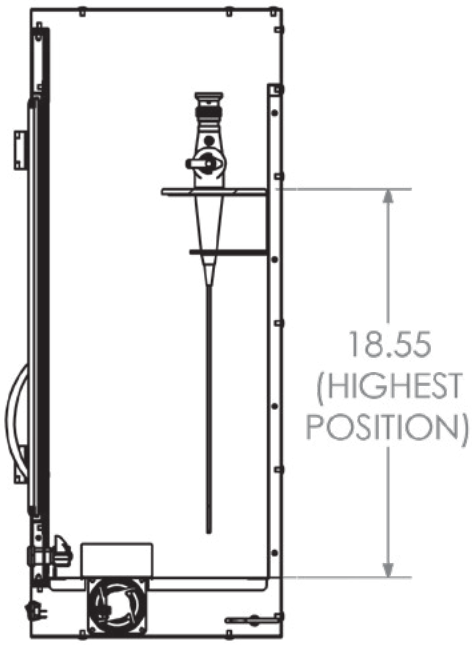

LOCK OPTIONS

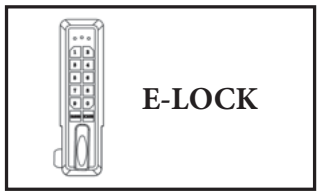

Identifying the SCW2448 Cabinet

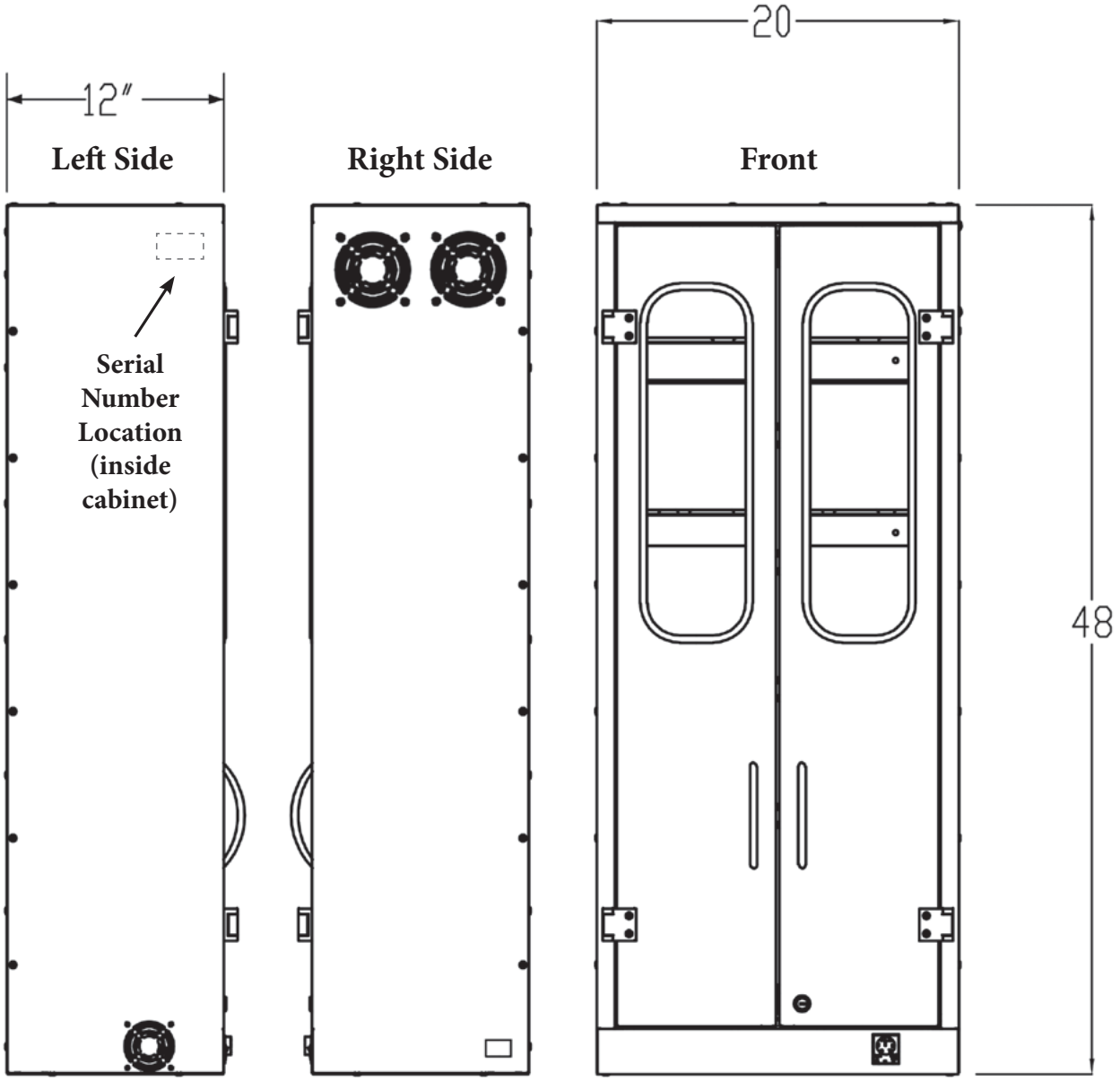

LOCK OPTIONS

KEY LOCK

E-LOCK

Scope Cabinet Features

Drying Package (DP) Models Only

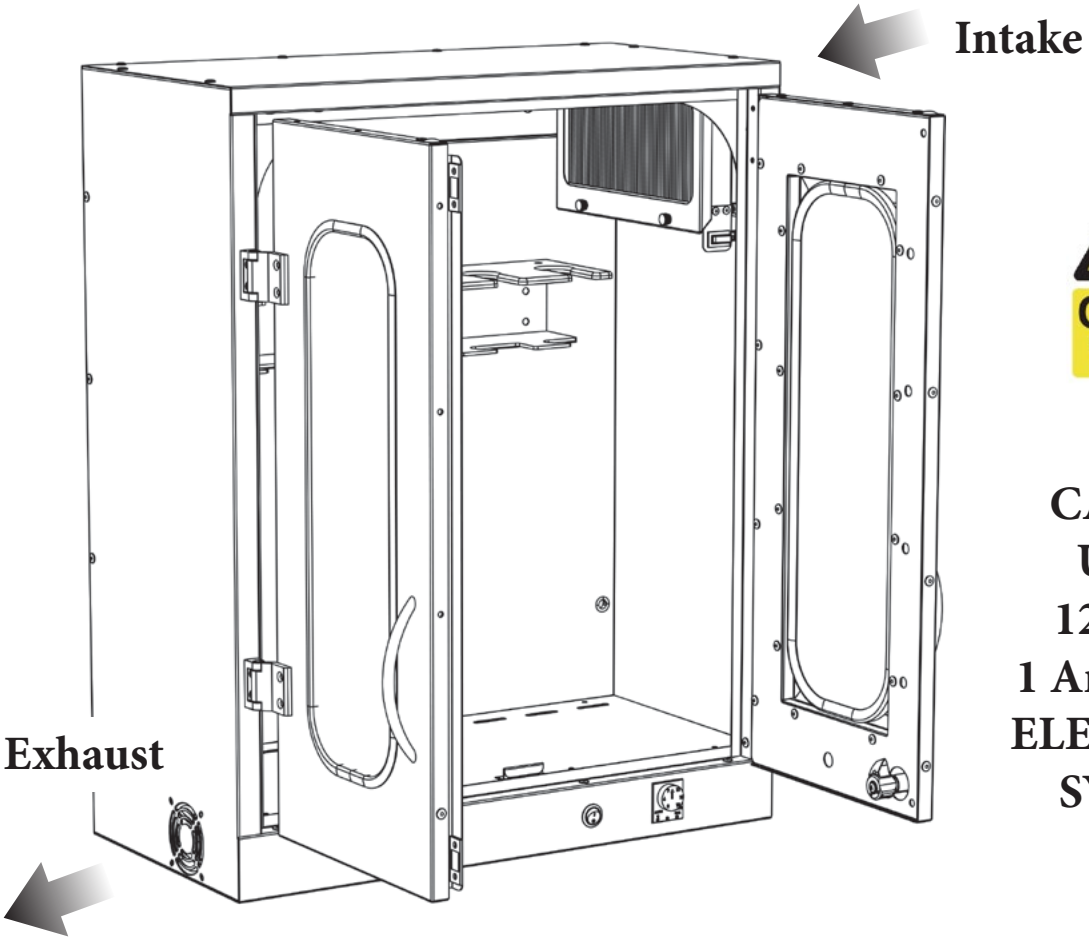

THIS CABINET USES A 120 VAC / 1 Amp / 60Hz ELECTRICAL SYSTEM.

Positive pressure HEPA filtered airflow using two intake fans and one exhaust fan.

The fan's electrical system is built into the structure for a complete plug and play system.

The timer is built in the cabinet front so time settings for drying can be adjusted.

Customizable scope holders fit most common scope types and hold up to 6 ENT Scopes.

Two thumb screws provide easy access to the intake fans and HEPA Filters — only one scope needs to be removed from the cabinet for fan and filter access or replacement.

Tempered glass windows maximize visibility for internal inspections.

An optional UV-C LED disinfection strip is available for scope sterilization. This LED emits 270nm UVC radiation for sterilization and disinfection applications.

EYE AND SKIN SAFETY WARNING:

UV-C wavelength radiation is harmful to human skin and eyes, and is presumed to be a carcinogen. Take extra precautions to avoid exposure at all times. When using this product, ensure that no humans or animals are exposed during device operation.

Installing the Scope Cabinet

Rear Panel of SCW2430

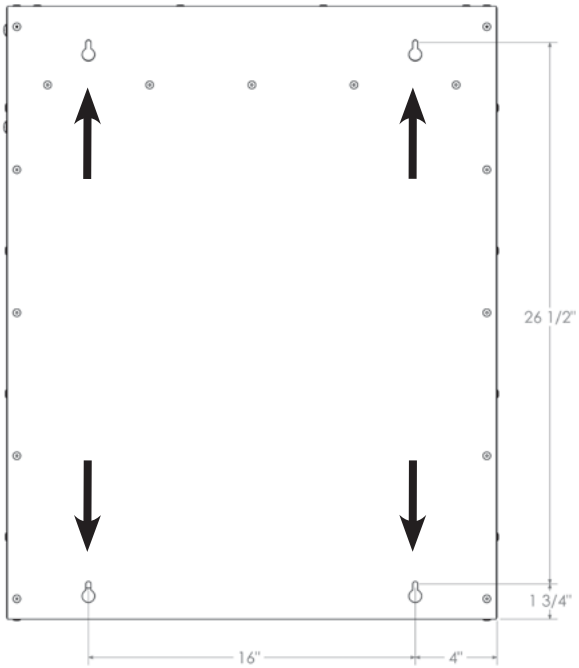

Rear Panel of SCW2448

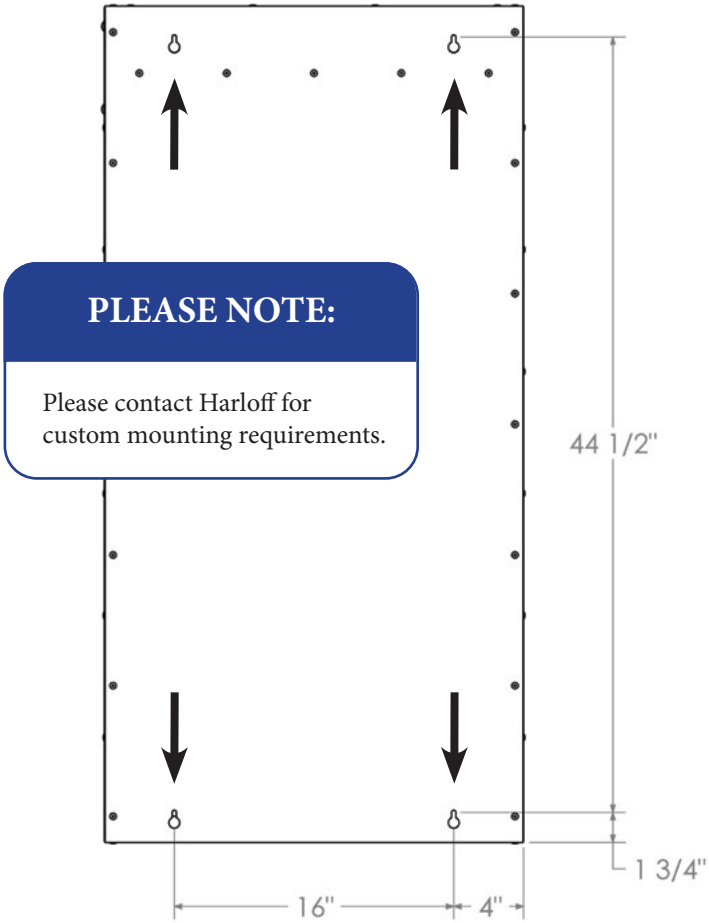

PLEASE NOTE:

Please contact Harloff for custom mounting requirements.

Step 1: Open the packaging and inspect for shipping damages.

Step 2: Transport the cabinet to it's final mounting location. Position the cabinet against a wall such that the power connection is within 5 ½ ft of the nearest wall outlet.

Step 3: Locate the studs on the wall that the cabinet will be mounted on. Use the four slots shown in the rear of the cabinet to determine hole location, mounted level at whatever height is optimal for your facility. If bolting into a concrete wall stud locations are not necessary.

Step 4: Once the cabinet is ready to be secured, we recommend that a team of two or more tip the cabinet into an upright position against the wall.

Step 5: Using applicable mounting hardware *(we recommend using 1/4" lag bolts)* per local to the wall. Using a 1/4" or 5/16" bit, you may want to pre-drill the studs in the four locations where the cabinet will be secured.

Step 6: Remove your filter from the plastic bag. Open the HEPA filter panel as shown on page 11 and insert the filter into the filter enclosure, then close and secure the panel.

Step 7: Plug the power cord into the power adapter on the lower side of the cabinet. Then plug the cord into the wall outlet. Fans and optional UV lighting should turn on if the doors are closed and turn off if the doors are open

Step 8: Test the system by opening and closing the doors.

Operation of the Drying Package

Drying Package (DP) Models Only

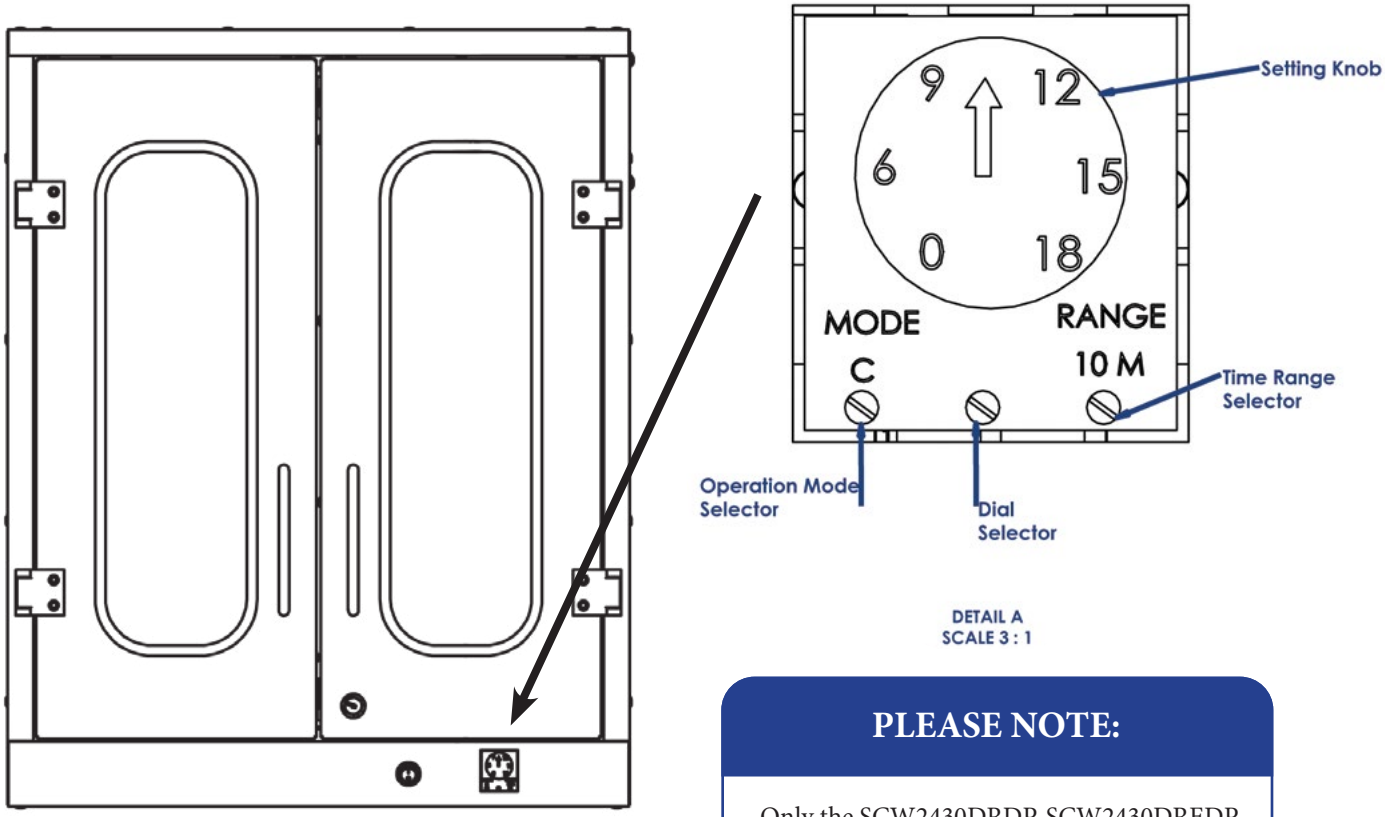

PLEASE NOTE:

Only the SCW2430DRDP, SCW2430DREDP, SCW2448DRDP and SCW2448DREDP units will come installed with a timer.

Unplug cabinet from power before adjusting the system!

Setting Knob: This knob selects the run time of the fans from the display behind it. The arrow indicates the runtime selection. As shown the selection is between 9 & 12 on a range of 10 minutes. so the fans will run 10 (setting) X 10 M (range) or 100 minutes.

Operation Mode Selector: Preset to mode C. Do not change!

Dial Selector: This changes the numbers displayed behind the Setting Knob.

Time Range Selector: This changes the units of time that the Setting Knob can select. As shown 10 M means each unit is 10 minutes.

Fan operation: The timer sets how long the fans will run once both doors are closed. This time will reset whenever the doors are opened. Standard factory setting is 100 minutes of runtime and can be set to a maximum runtime of 180 hours.

How to Replace the Filter

Drying Package (DP) Models Only

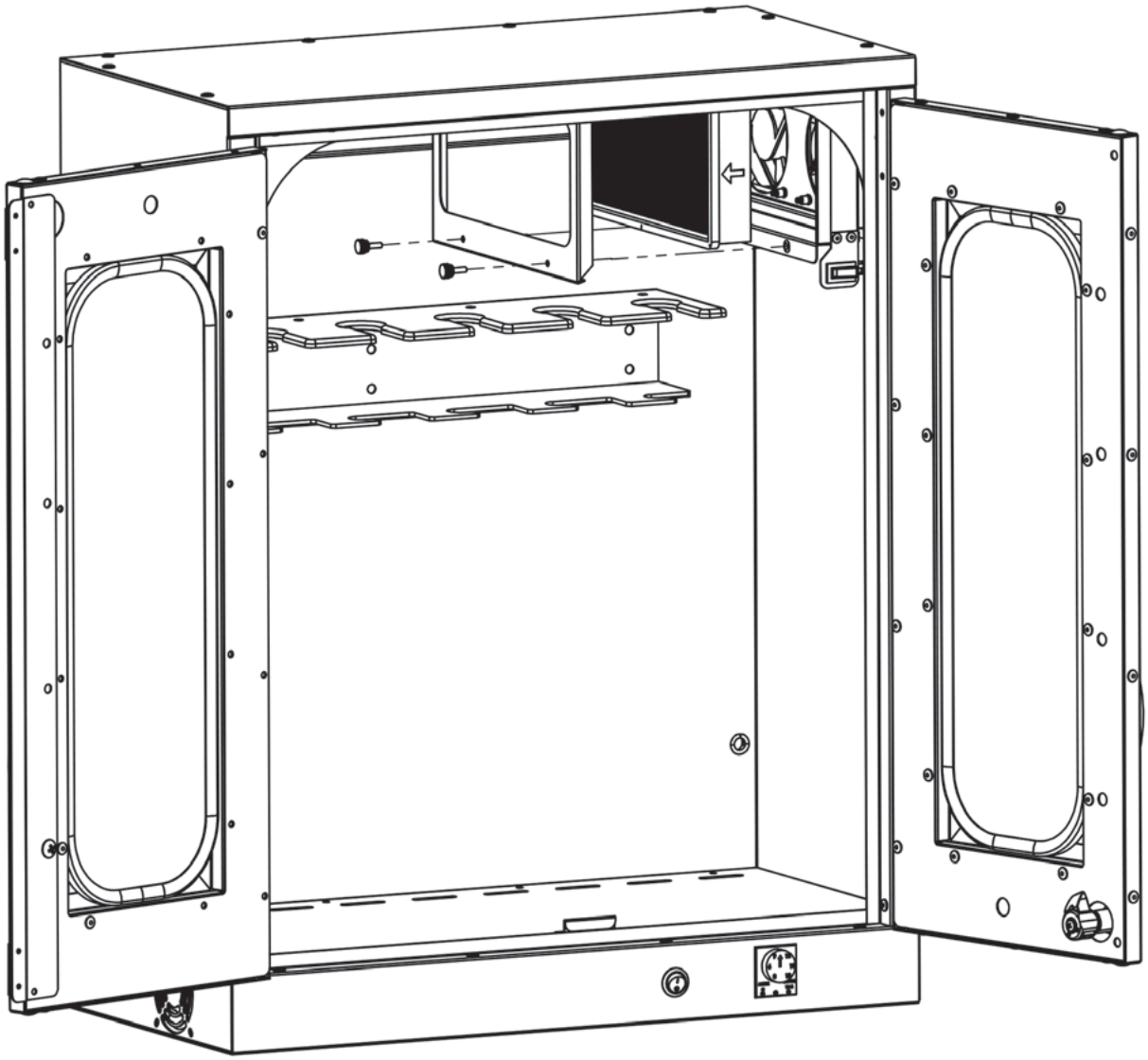

Step 1: With the cabinet door open, locate the thumb screws that secure the faceplate of the filter holder inside the cabinet.

Step 2: Unscrew the two thumb screws. Remove the faceplate, which hooks at the top of the filter holder, and remove the dirty HEPA filter by pulling it straight out.

Step 3: Place the new HEPA filter into the filter holder with the arrow pointing into the cabinet.

Step 4: Mount the filter faceplate back onto the filter holder, hooking it over the top lip.
Then replace the thumb screws and hand tighten them back into place.

Electronic Components

Drying Package (DP) Models Only

ELECTRONIC COMPONENT	PICTURE	KEY FEATURES
HARLOFF PART #: 41094A DESCRIPTION: DC TUBE AXIAL FAN LONG DESCRIPTION: 24 VDC FAN W/ MOTOR AIR FLOW DIRECTION TOWARDS LABEL. THERMOPLASTIC CONSTRUCTION.	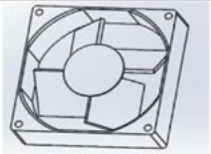	AIR FLOW: 51.2 CFM POWER/CURRENT: 1.2 W, 0.050A NOISE LEVEL: 28 dB OPERATING TEMPS: -10 TO 70 C WEIGHT: 94.8 G SAFETY: UL/CE/VDE APPROVED
HARLOFF PART #: 41080 DESCRIPTION: DC TUBE AXIAL FAN LONG DESCRIPTION: 24 VDC FAN W/ MOTOR AIR FLOW DIRECTION TOWARDS LABEL. THERMOPLASTIC CONSTRUCTION.	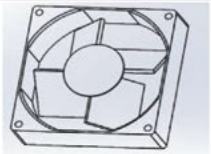	AIR FLOW: 51 CFM POWER/CURRENT: 6.24 W, .20 A NOISE LEVEL: 46 dB OPERATING TEMPS: -10 TO 70 C WEIGHT: 90 G SAFETY: UL/CE/VDE APPROVED
HARLOFF PART #: 41081A DESCRIPTION: 24V 50 W AC/DC ADAPTER LONG DESCRIPTION: EXTERNAL DESKTOP CLASS I INPUT (SOLD SEPARATELY) 5.5 MM OUTPUT JACK.	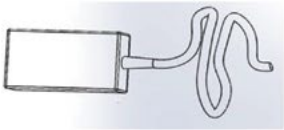	POWER/CURRENT: 50 W, 2.5A OPERATING TEMPS: -20 TO 50 C CORD LENGTH: 4.7 FT. MOISTURE SENSITIVITY: 1 (MSL SCALE) SAFETY: UL/CE APPROVED FOR MEDICAL APPLICATIONS. LEAD FREE STATUS: LEAD FREE/ RoHS COMPLIANT.
HARLOFF PART #: 41084 DESCRIPTION: ANALOG TIMER GT3A-4 LONG DESCRIPTION: 11-PIN MULTI-MODE TIMER WITH ADJUSTABLE TIME SETTINGS		POWER/CURRENT: 0.8 W, 5 A. OPERATING TEMPS: -10 TO 50 C WEIGHT: 80 g TIME RANGE: 0.1S-180HRS. MECH.LIFE : 10,000,000 CYCLES ELEC.LIFE: 50,000 CYCLES SAFETY: UL/CE
HARLOFF PART #: 41089B DESCRIPTION: ADAPTER CORD LONG DESCRIPTION: 10 FT. WALL ADAPTER CORD. MALE PINS TO FEMALE SOCKETS. THREE PRONGED GROUNDED WALL PLUG HOSPITAL		CURRENT: 10 A. OPERATING TEMPS: UP TO 105 C CORD LENGTH: 10 FT. INPUT VOLTAGE: 90-264VAC APPROVED COUNTRIES: USA & CANADA. SAFETY: UL/CE HOSPITAL GRADE MOISTURE SENSITIVITY: 1 (MSL SCALE) LEAD FREE STATUS: LEAD FREE/ RoHS COMPLIANT.
HARLOFF PART#: 41085 DESCRIPTION: TIMER SOCKET	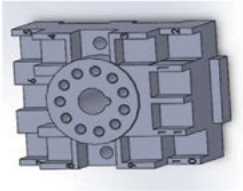	
HARLOFF PART#: 41083 DESCRIPTION: BARREL CONNECTOR, POWER JACK	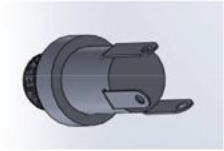	
HARLOFF PART#: 41088 DESCRIPTION: SWITCH PROXIMITY HARLOFF PART#: 41099 DESCRIPTION: TOGGLE SWITCH	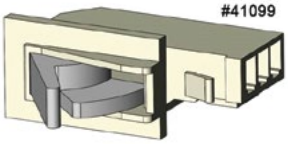	

PLEASE NOTE:

Harloff only uses electronic components that are certified to CSA and UL standards.

All internal wiring was done at the factory using 20 gauge insulated wire, all connections are soldered together and each joint is wrapped with heat shrink.

Internal Wiring Diagram

Drying Package (DP) Models Only

If your scope cabinet is in need of service or repair, WIRING OF THE ELECTRIC DRYING SYSTEM SHOULD BE DONE BY HARLOFF OR AN ELECTRICIAN.

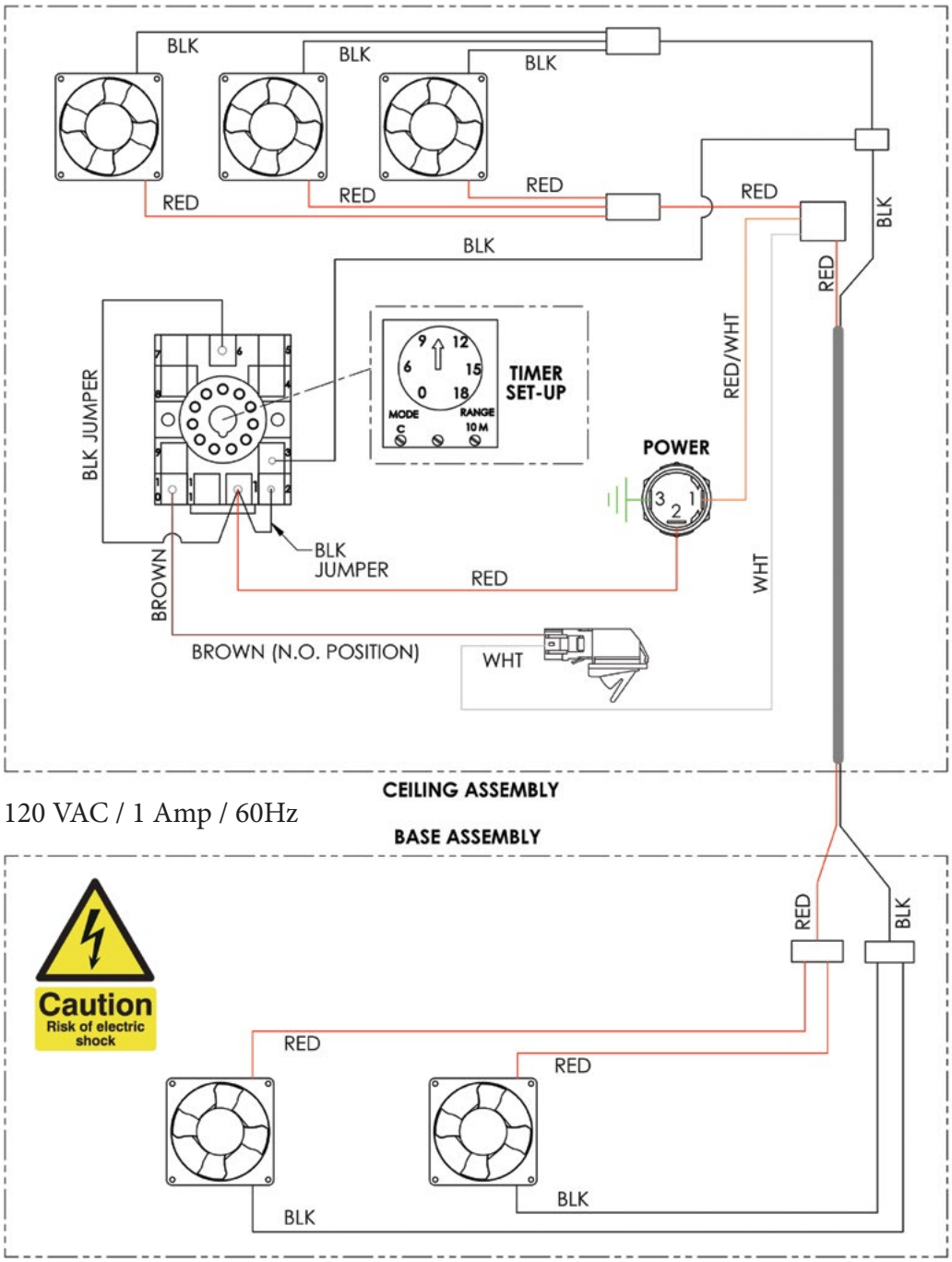

120 VAC / 1 Amp / 60Hz

PLEASE NOTE: The number of fans in your scope cabinet will vary from this diagram depending on the model of cabinet that you purchased.

Cabinet Basic Care

Recommended Caring Steps:

1. Keep cabinets indoors in a climate controlled, ventilated environment.

2. Do not attempt to install or move cabinets alone.

3. Contact Harloff before attempting repairs.

4. Clean the cabinets with Harloff's recommended surface cleaners (list available by request or online at www.harloff.com/faqs in the Product Support section) or in accordance with the hospital campus regulations.

5. Thoroughly inspect fans and filter for cleanliness and operation. Harloff suggests filter replacement every 3-6 months, but we recommend that each facility establish their own replacement plan for the HEPA filter. You will need to buy a single HEPA filter **(SCFILTER1)** for replacement, but multi-packs are also available for purchase. No filter is installed on the bottom fan. Place filter orders at medicalsales@harloff.com or call 800-433-4064.
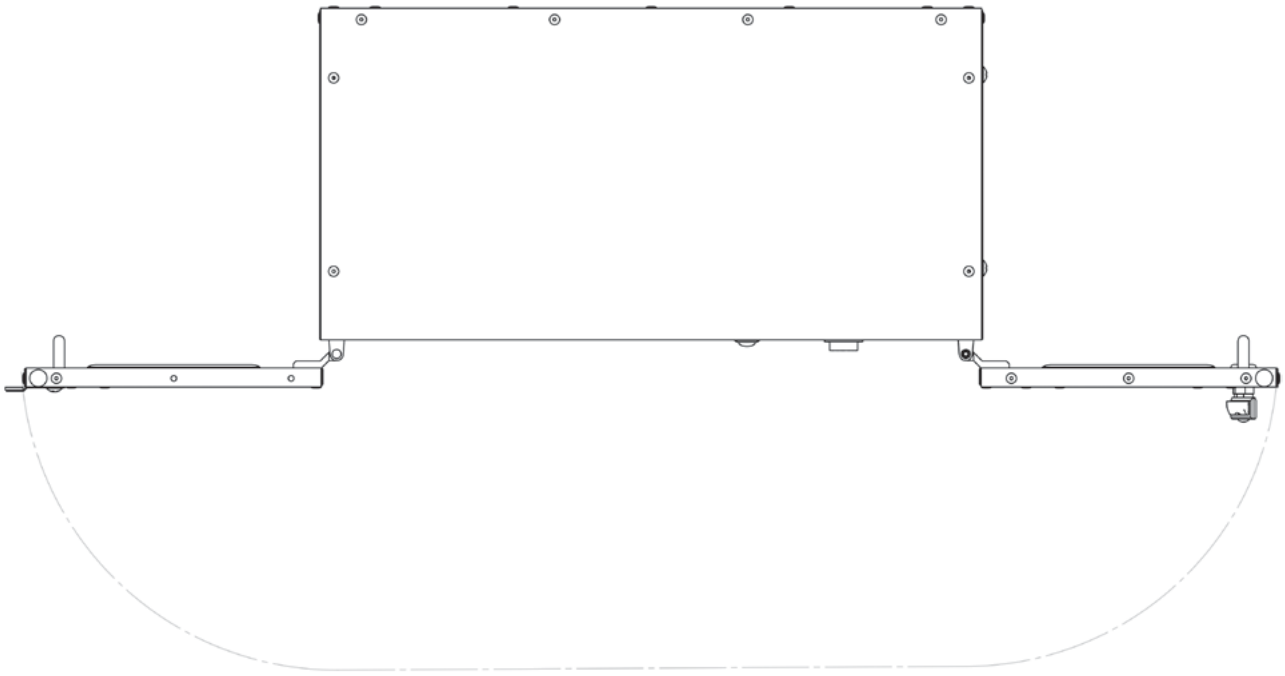
6. Do not place items in front of the lower exhaust or in front of the intake of the cabinet. Blocking air access will disturb airflow to cabinet, affecting its performance, and might cause fan to stop working by overloading it.