HEAT SEALED POWDER COATED OR STAINLESS STEEL SCOPE DRYING CABINET

SureDry SCOPE CABINETS

PART# MAN-SURE DRY **DATE ISSUED:** January 2026

Standard Plug & Play Upgradeable Models:

SC8024DRDP | SC8024DREDP
SCSS8024DRDP | SCSS8024DREDP

SC8036DRDP | SC8036DREDP
SCSS8036DRDP | SCSS8036DREDP

SC8030DRDP | SC8030DREDP
SCSS8030DRDP | SCSS8030DREDP

SC8044DRDP | SC8044DREDP
SCSS8044DRDP | SCSS8044DREDP

24" WIDE:
8 or fewer scope versions

36" WIDE:
16, 14, 12 and 8 scope versions

30" WIDE:
10, 8 and 5 scope versions

44" WIDE:
16 and 8 scope versions

HARLOFF
CLINICAL STORAGE BY CAPSA HEALTHCARE

User Manual and Instruction Guide

Table of Contents

Contents of Package 3

Identifying the Cabinet 4

Scope Cabinet Features 5

Installing the Scope Cabinet 6

Wall Retaining Instructions 7

Adjusting the Scope Support Arm Position 8

How to Replace the Filters 9

Operation of the Drying Package 10

Electronic Components 11

Internal Wire Diagrams 12

Cabinet Basic Care 13

Air Circulation Data & Model 14

Cabinet Door Adjustment 15

Contents of Package

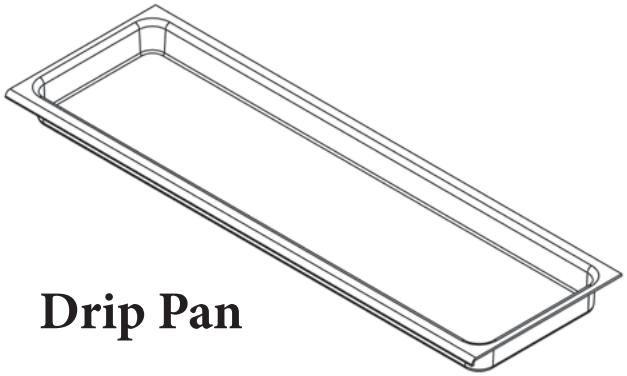

Drip Pan

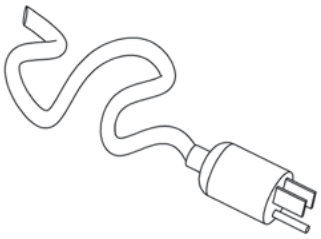

Medical Grade Power Cord 10 ft. [3.05 meter]

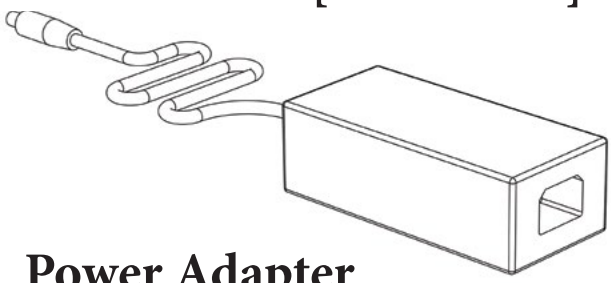

Power Adapter

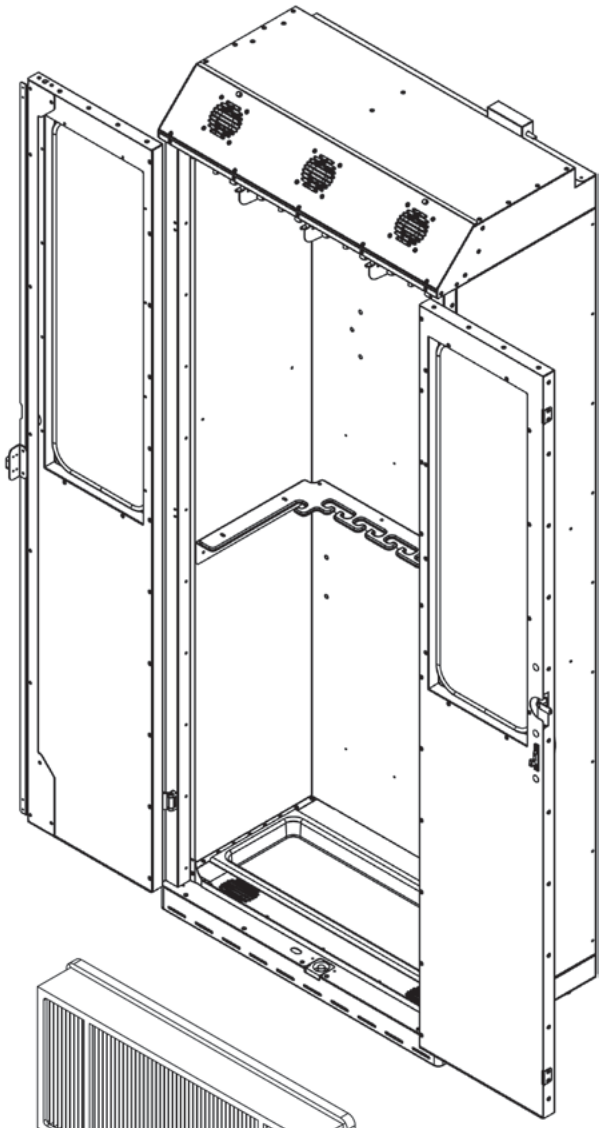

Scope Filter

Contents:

- 1x Drip Pan
- Scope Support Arms (Installed)
- Scope Filters, 2x for 8024 and 8030 models and 3x for all other models
- 1x Medical Grade Power Cord (Approved for use in US & Canada)

Harloff only uses electronic components that are certified to CSA and UL standards.

Identifying the Cabinet

Left Side **Front** **Right Side**

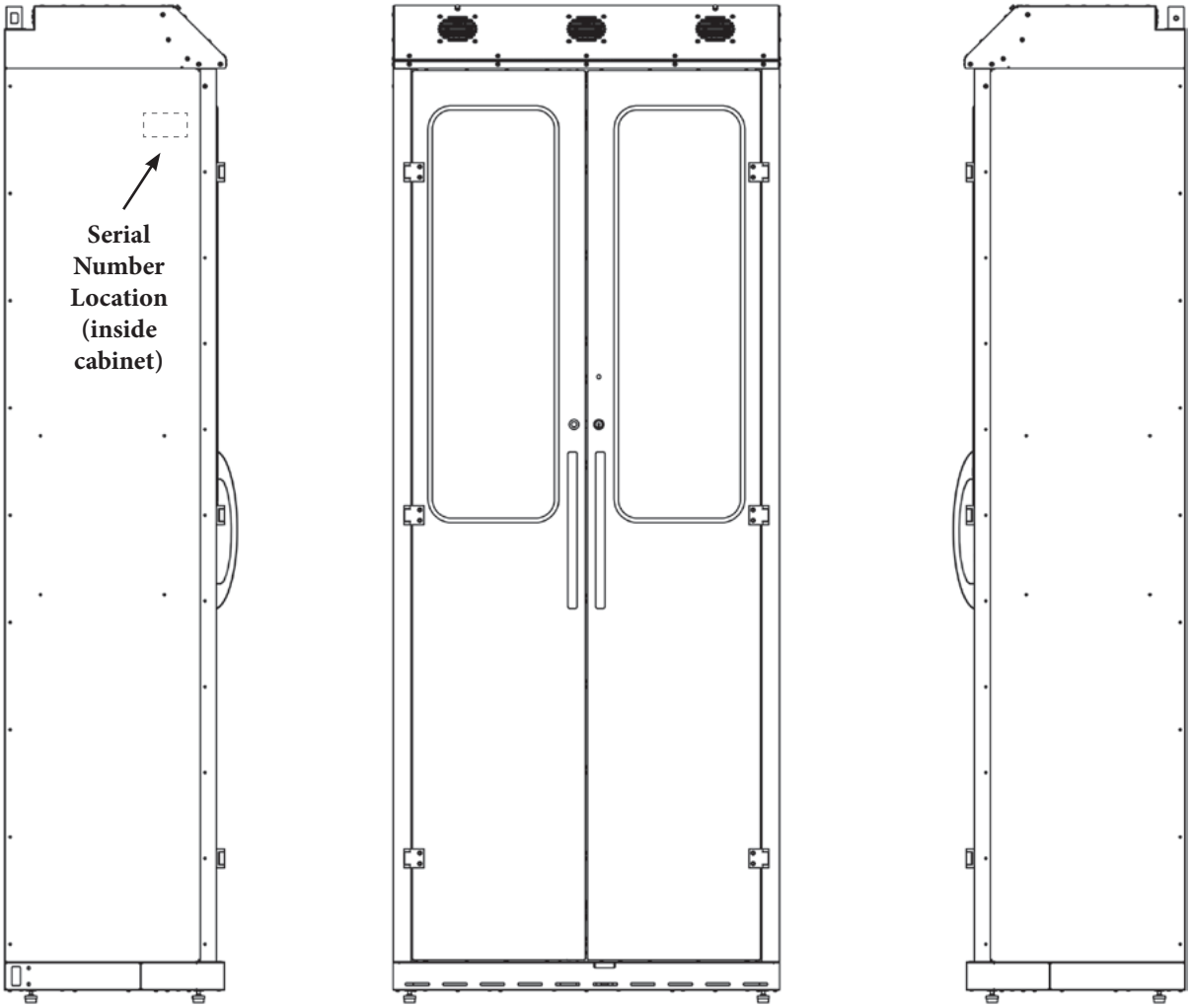

KEY LOCK

E-LOCK

ELP LOCK

EKC LOCK

Harloff only uses electronic components that are certified to CSA and UL standards.

Scope Cabinet Features

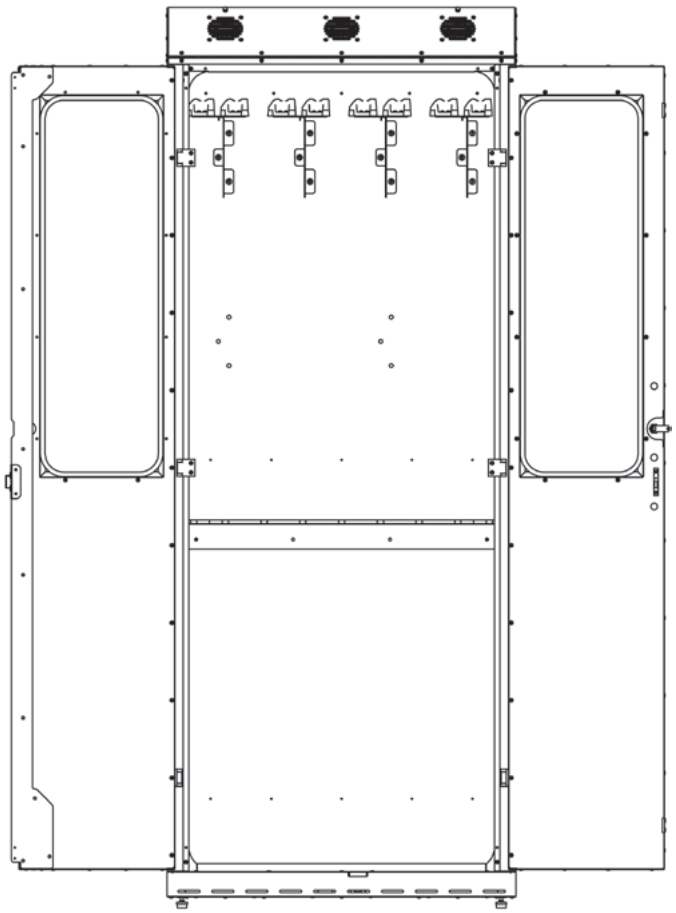

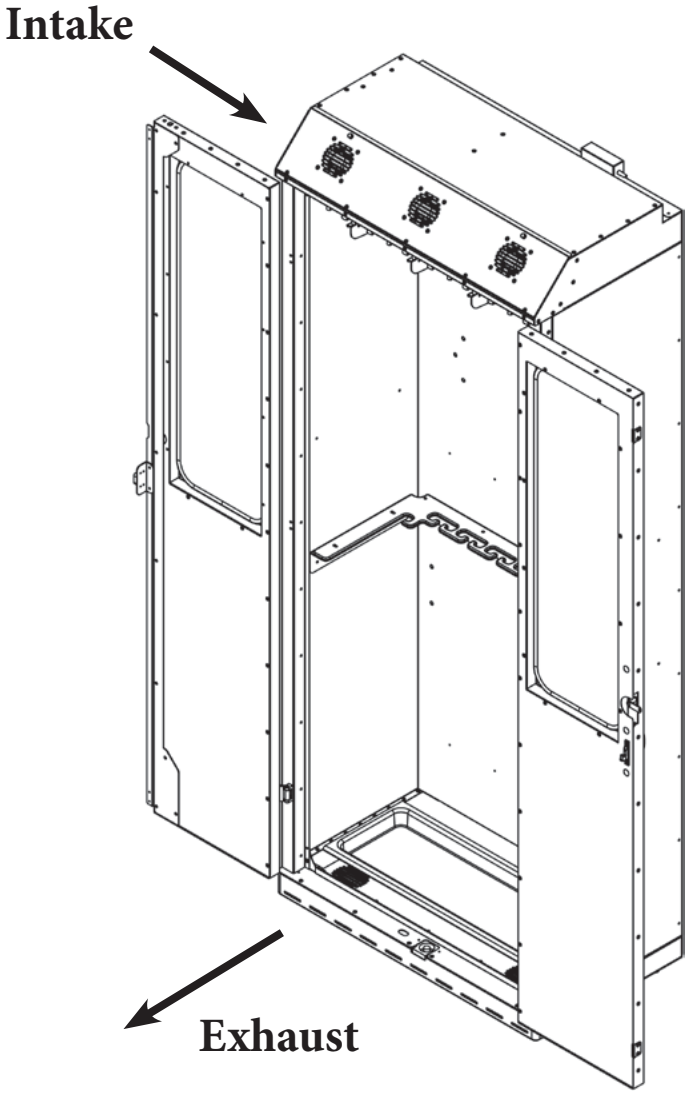

Positive pressure HEPA filtered airflow using intake fans and exhaust fans.

The fan's electrical system is built into the cabinet's structure for a complete plug and play system. **See "INSTALLING THE SCOPE CABINET" (PG. 6) for more info.**

Timer is built in the ceiling so time settings for drying can be adjusted. **See "OPERATION OF THE DRYING PACKAGE" (PG. 10) for more info.**

Some of the scope support arms have alternate height positions that they can be placed into. **See "ADJUSTING THE SCOPE SUPPORT ARM POSITION" (PG. 8) for more info.**

The front of the top is hinged to tilt outward and provide easy access to intake fans and the HEPA Filters eliminating the need to remove all scopes for fan and filter access or replacement.

Tempered glass windows maximize visibility for internal inspections.

Installing the Scope Cabinet

Step 1: Open the crate and inspect for shipping damages. Cabinet is shipped on its back as shown.

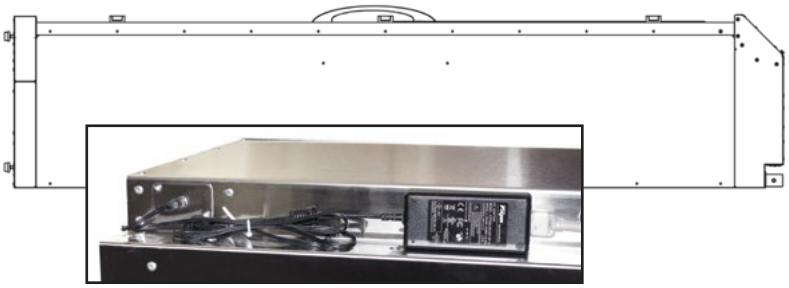

Step 2: Transport the cabinet, remaining flat on the pallet, to it's final destination.

Step 3: Once the cabinet is ready to lift into place, we recommend that a team of two or more tip the cabinet into an upright position.

Step 4: Remove Drip pan from the packaging and place into the cabinet as shown.

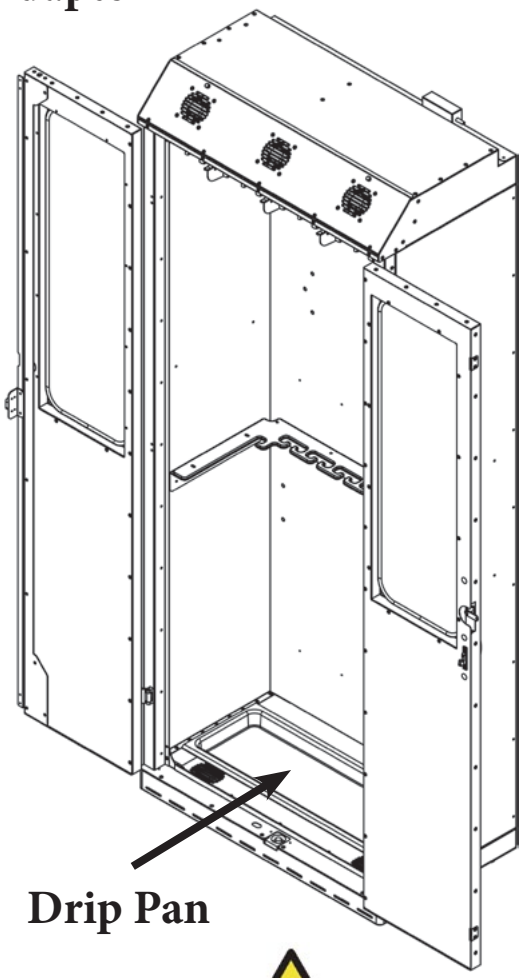

Step 5: Open the HEPA filter panel as shown on page 11. After removing your filters from their plastic bags insert them into the filter enclosures, then close and secure the panel.

DON'T FORGET!

Make sure you remove ALL filters and drip pan from their protective plastic bags before plugging in your scope cabinet.

Step 6: Position the cabinet against a wall such that the power connection on the top right of the cabinet is within reach of the nearest wall outlet.

Step 7: Plug the power cord into the power adapter on the top right, on the rear of the cabinet. Then plug the cord into the wall outlet. Fans should turn on if the doors are closed.

Step 8: Test system by opening the doors.
The fans will turn off when the doors are open.

ELECTRICAL REQUIREMENTS: 120V AC Outlet

Wall Retaining Instructions

Recommended for Highly Active Seismic Zones

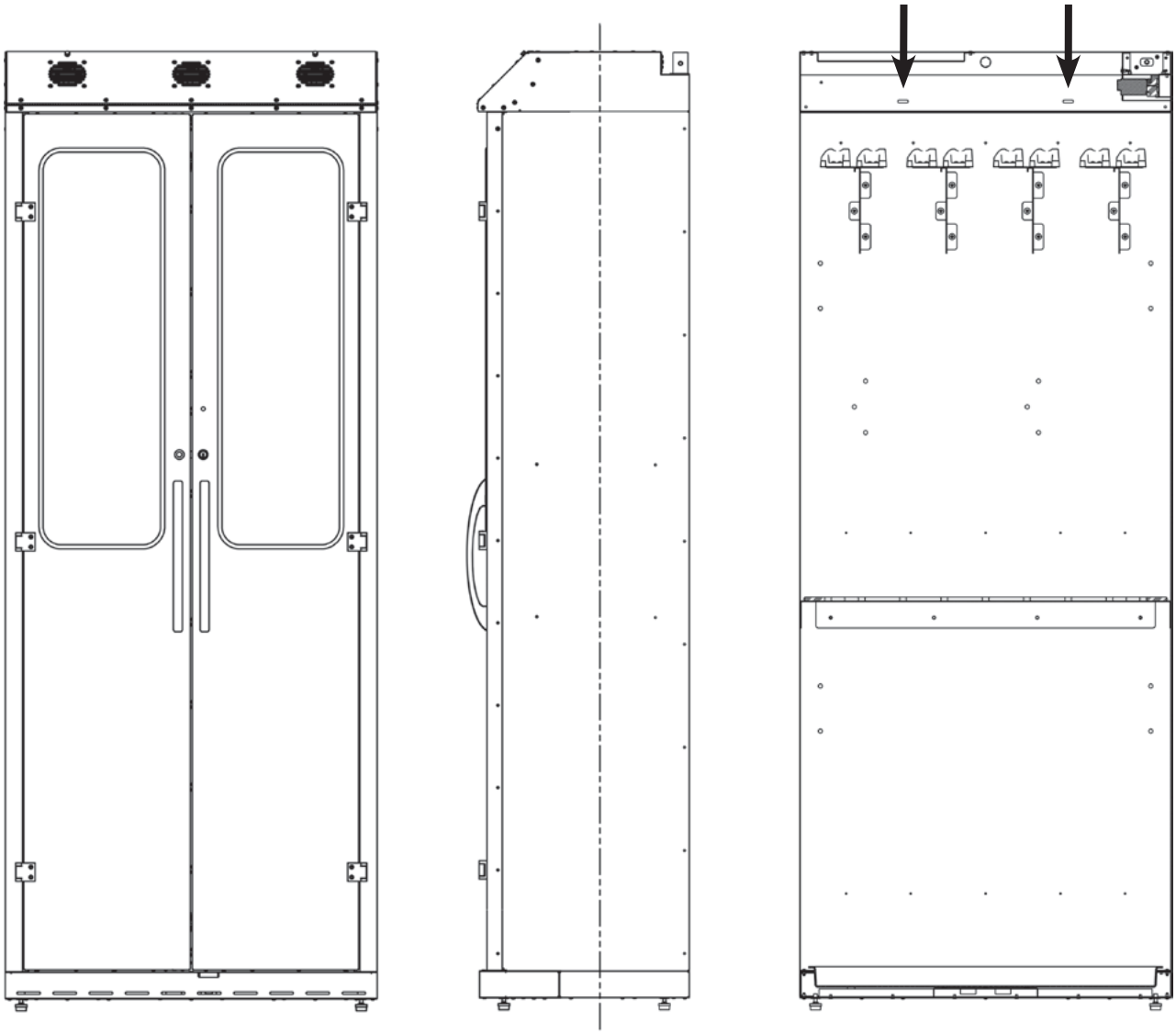

Step 1: Locate the studs on the wall the cabinet will be set against. If bolting into a concrete wall stud locations are not necessary.

Step 2: Using a 1/4" or 5/16" bit, drill out the back panel of the cabinet and studs in two locations where the studs are. Use the two horizontal slots shown above to start the holes.

Step 3: Using the lag bolts supplied in the provided wall mounting kit or end user supplied mounting hardware, bolt the cabinet to the wall through the drilled holes.

For custom mounting requirements contact us at warranty@harloff.com

Adjusting the Scope Support Arm Position

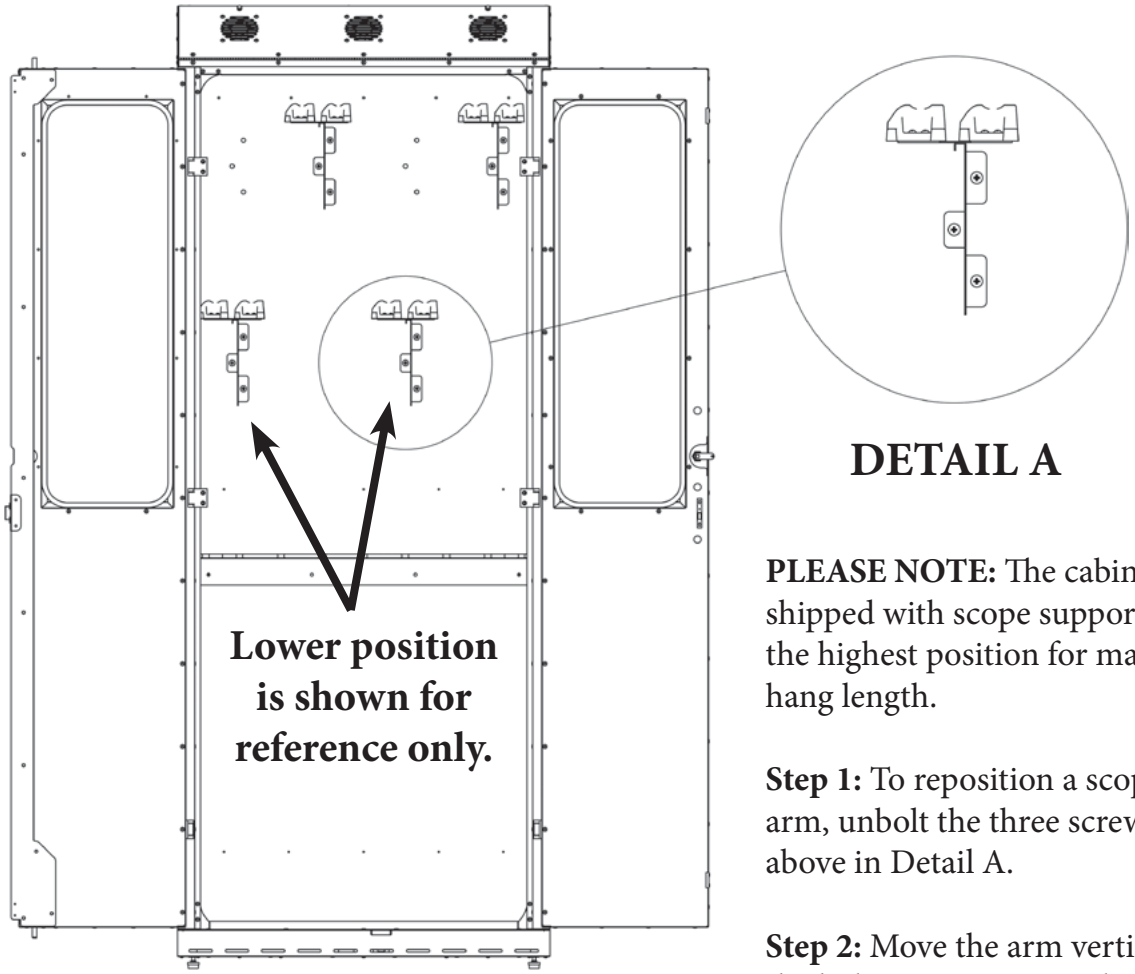

DETAIL A

PLEASE NOTE: The cabinet is shipped with scope support arms in the highest position for maximum hang length.

Step 1: To reposition a scope support arm, unbolt the three screws shown above in Detail A.

Step 2: Move the arm vertically until the hole pattern on arm lines up with threaded holes' pattern on back-panel.

Step 3: Bolt the arm into the desired position with the screws removed in Step 1.

Mounts in four upper and two lower possible positions.

Tall cabinet maximum hanging length: Position 1 (top), 80 in. (203 cm), **Position 2 (bottom),** 61 in. (155 cm) – Distance between the scope support arm's position to the bottom of the drip pan.

How to Replace the Filters

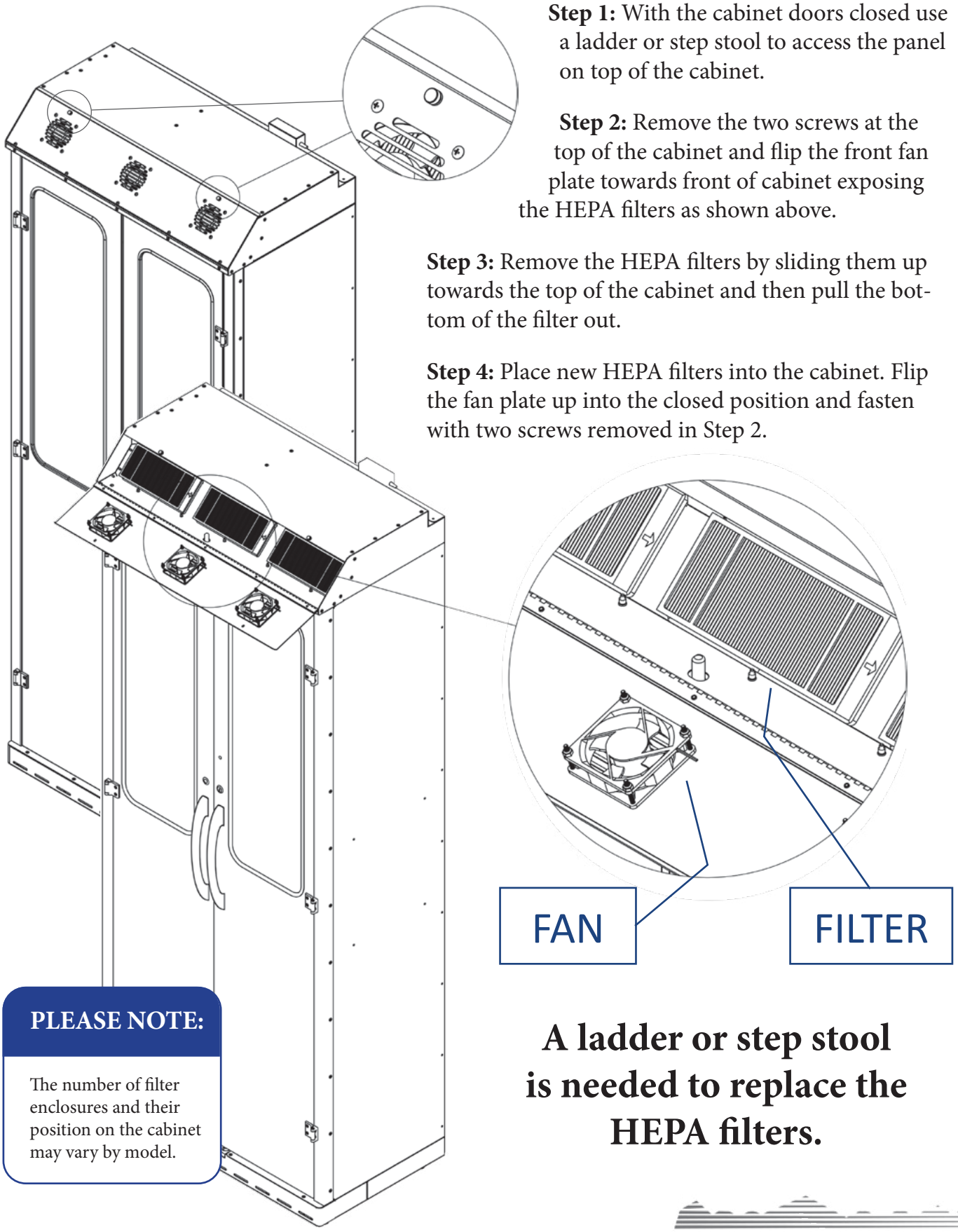

Step 1: With the cabinet doors closed use a ladder or step stool to access the panel on top of the cabinet.

Step 2: Remove the two screws at the top of the cabinet and flip the front fan plate towards front of cabinet exposing the HEPA filters as shown above.

Step 3: Remove the HEPA filters by sliding them up towards the top of the cabinet and then pull the bottom of the filter out.

Step 4: Place new HEPA filters into the cabinet. Flip the fan plate up into the closed position and fasten with two screws removed in Step 2.

PLEASE NOTE:

The number of filter enclosures and their position on the cabinet may vary by model.

A ladder or step stool is needed to replace the HEPA filters.

Operation of the Drying Package

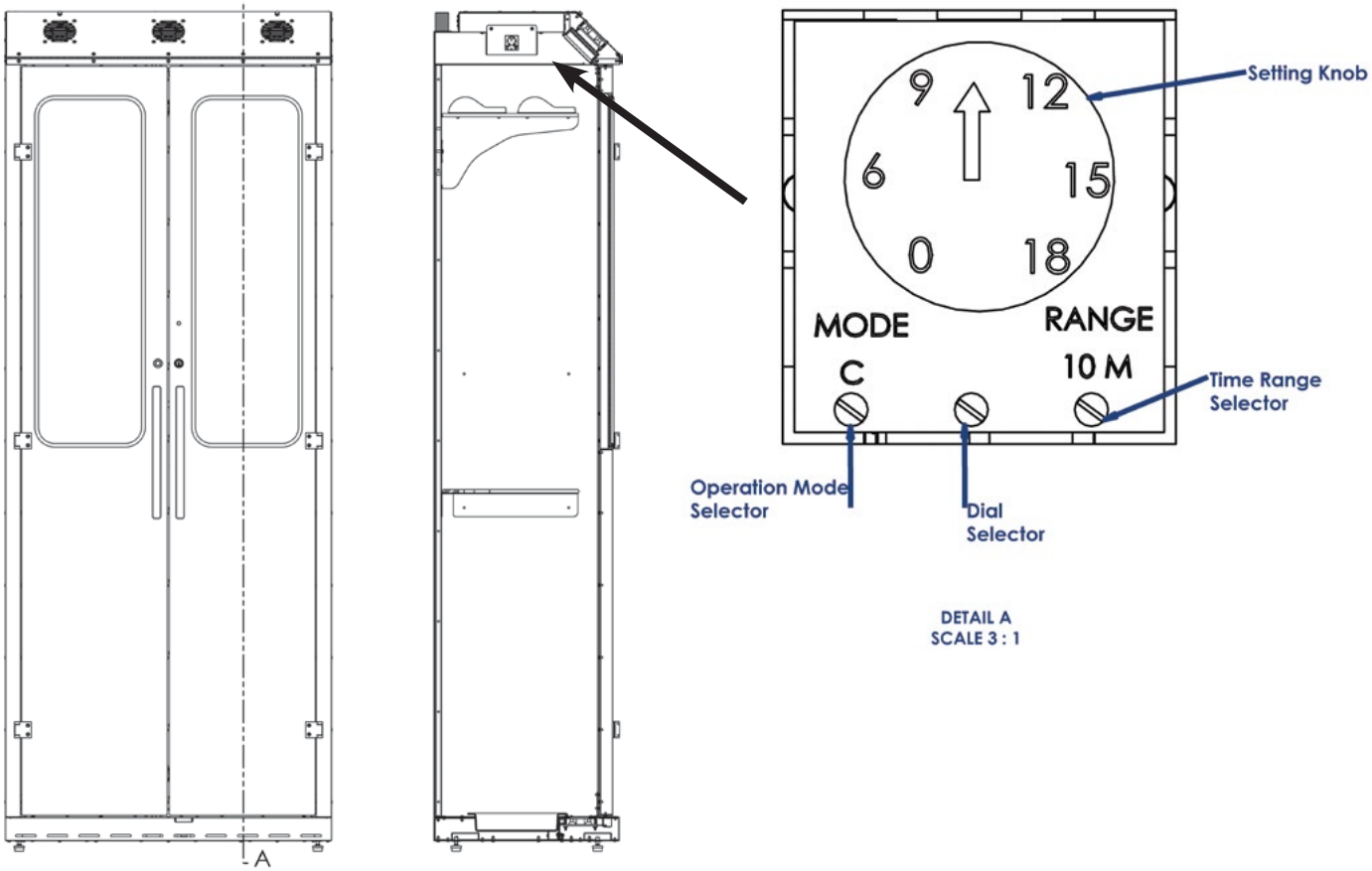

Unplug cabinet from power before adjusting the system!

Setting Knob: This knob selects the run time of the fans from the display behind it. The arrow indicates the runtime selection. As shown the selection is between 9 & 12 on a range of 10 minutes. so the fans will run 10 (setting) X 10 M (range) or 100 minutes.

Operation Mode Selector: Preset to mode C. Do not change!

Dial Selector: This changes the numbers displayed behind the Setting Knob.

Time Range Selector: This changes the units of time that the Setting Knob can select. As shown 10 M means each unit is 10 minutes.

Fan operation: The timer sets how long the fans will run once both doors are closed. This time will reset whenever the doors are opened. Standard factory setting is 100 minutes of runtime and can be set to a maximum runtime of 180 hours.

Electronic Components

ELECTRONIC COMPONENT	PICTURE	KEY FEATURES
HARLOFF PART #: 41094A DESCRIPTION: DC TUBE AXIAL FAN LONG DESCRIPTION: 24 VDC FAN W/ MOTOR AIR FLOW DIRECTION TOWARDS LABEL. THERMOPLASTIC CONSTRUCTION.	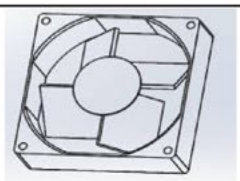	AIR FLOW: 51.2 CFM POWER/CURRENT: 1.2 W, 0.050A NOISE LEVEL: 28 dB OPERATING TEMPS: -10 TO 70 C WEIGHT: 94.8 G SAFETY: UL/CE/VDE APPROVED
HARLOFF PART #: 41081A DESCRIPTION: 24V 50 W AC/DC ADAPTER LONG DESCRIPTION: EXTERNAL DESKTOP CLASS I INPUT (SOLD SEPARATELY) 5.5 MM OUTPUT JACK.	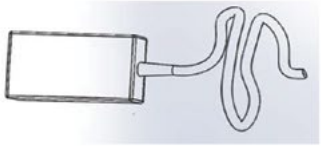	POWER/CURRENT: 50 W, 2.5A OPERATING TEMPS: -20 TO 50 C CORD LENGTH: 4.7 FT. MOISTURE SENSITIVITY: 1 (MSL SCALE) SAFETY: UL/CE APPROVED FOR MEDICAL APPLICATIONS. LEAD FREE STATUS: LEAD FREE/ RoHS COMPLIANT.
HARLOFF PART #: 41084 DESCRIPTION: ANALOG TIMER GT3A-4 LONG DESCRIPTION: 11-PIN MULTI-MODE TIMER WITH ADJUSTABLE TIME SETTINGS		POWER/CURRENT: 0.8 W, 5 A. OPERATING TEMPS: -10 TO 50 C WEIGHT: 80 g TIME RANGE: 0.1S-180HRS. MECH.LIFE : 10,000,000 CYCLES ELEC.LIFE: 50,000 CYCLES SAFETY: UL/CE
HARLOFF PART #: 41089B DESCRIPTION: ADAPTER CORD LONG DESCRIPTION: 10 FT. WALL ADAPTER CORD. MALE PINS TO FEMALE SOCKETS. THREE PRONGED GROUNDED WALL PLUG HOSPITAL		CURRENT: 10 A. OPERATING TEMPS: UP TO 105 C CORD LENGTH: 10 FT. INPUT VOLTAGE: 90-264VAC APPROVED COUNTRIES: USA & CANADA. SAFETY: UL/CE HOSPITAL GRADE MOISTURE SENSITIVITY: 1 (MSL SCALE) LEAD FREE STATUS: LEAD FREE/ RoHS COMPLIANT.
HARLOFF PART#: 41085 DESCRIPTION: TIMER SOCKET	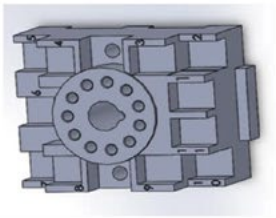	
HARLOFF PART#: 41083 DESCRIPTION: BARREL CONNECTOR, POWER JACK	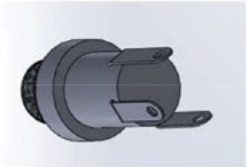	
HARLOFF PART#: 41088 DESCRIPTION: SWITCH PROXIMITY HARLOFF PART#: 41099 DESCRIPTION: TOGGLE SWITCH	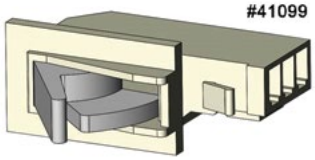	

PLEASE NOTE:

Harloff only uses electronic components that are certified to CSA and UL standards.

All internal wiring was done at the factory using 20 gauge insulated wire, all connections are soldered together and each joint is wrapped with heat shrink.

Wiring Diagram

If your scope cabinet is in need of service or repair,
WIRING OF THE ELECTRIC DRYING SYSTEM SHOULD BE DONE BY HARLOFF OR AN ELECTRICIAN.

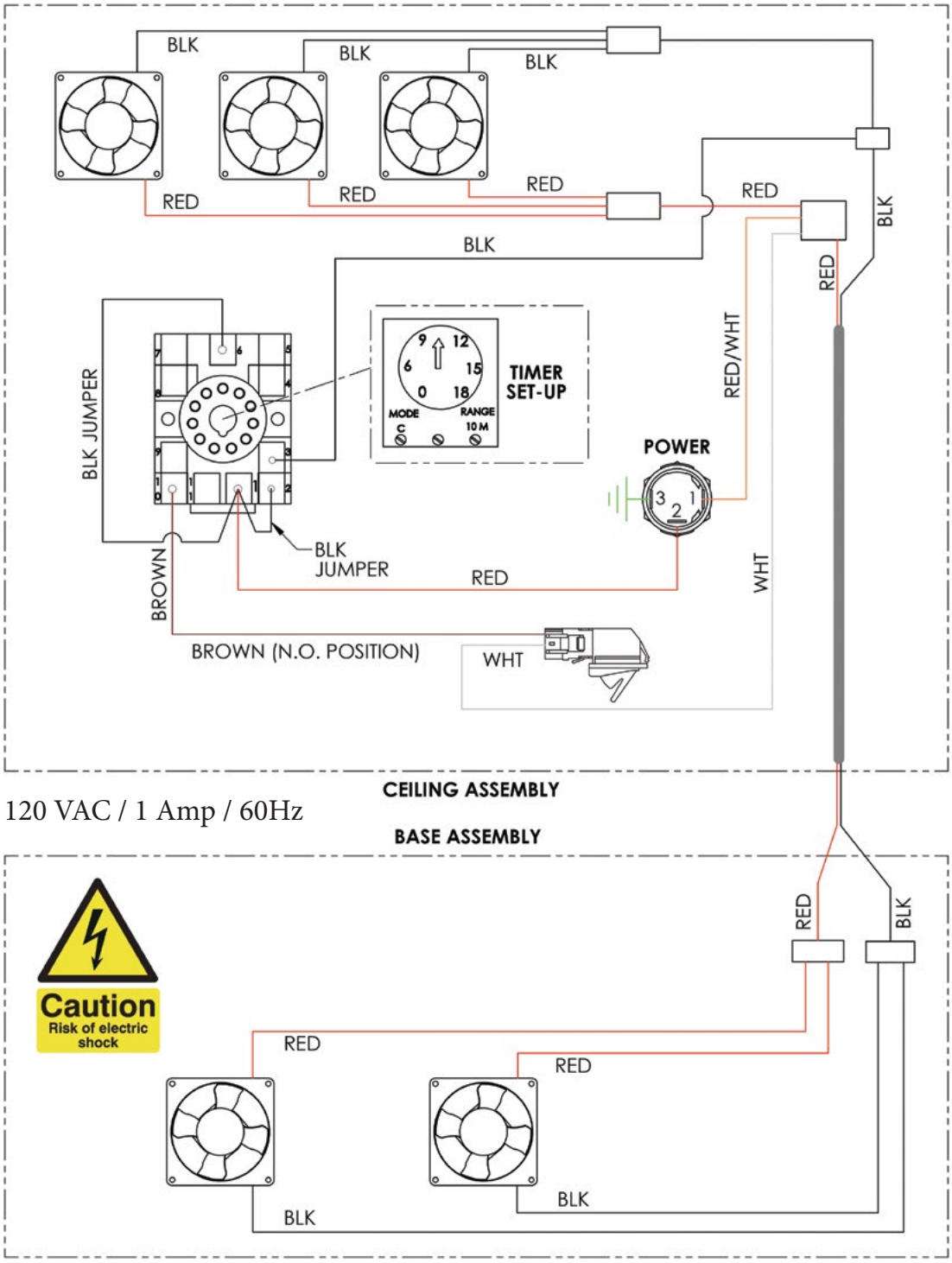

120 VAC / 1 Amp / 60Hz

Cabinet Basic Care

Recommended Caring Steps:

1. Keep cabinets indoors in a climate controlled, ventilated environment.

2. Do not attempt to install or move cabinets alone.

3. Contact Harloff before attempting repairs.

4. Clean the cabinets with Harloff's recommended surface cleaners (list available by request or online at www.harloff.com/faqs in the Product Support section) or in accordance with the hospital campus regulations.

5. Thoroughly inspect fans and filters for cleanliness and operation. Harloff suggests replacement of filters every 3-6 months, but we recommend that each facility establish their own replacement plan for the HEPA filters. Depending on your cabinet model, you will either want to buy a 2-pack of HEPA filters **(SCFILTER2)** or a 3-pack of HEPA filters (**SCFILTER3)** to replace all filters at once. No filters are installed on bottom fans. Place filter orders at medicalsales@harloff.com or call 800-433-4064.

6. Do not place items in front of the lower exhaust or on top of the intake of the cabinet. Blocking air access will disturb airflow to cabinet, affecting its performance, and might cause fan to stop working by overloading it.

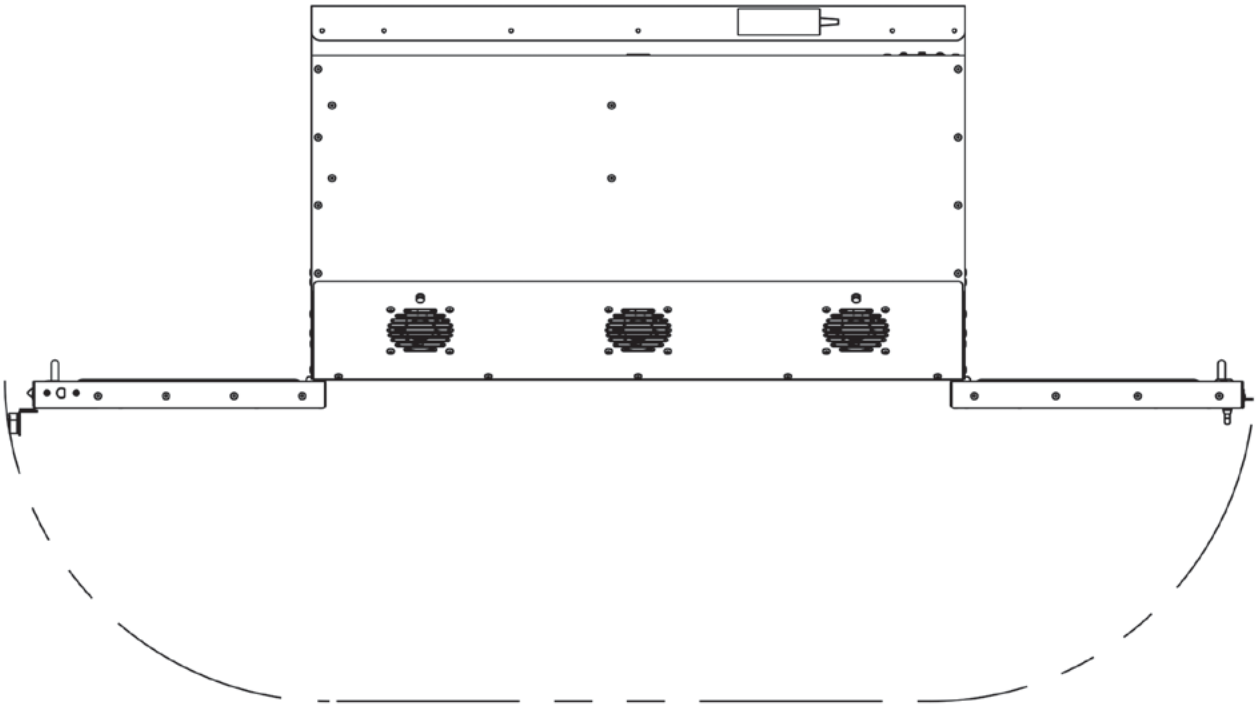

Air Circulation Data & Model

INTAKE:
Air flows in through the top intake fans, and feeds cabinet through the HEPA filters.

EXHAUST:
The lower fans pull the air out at the bottom of the cabinet.

NOTE:
Inlet has two to three fans on top, depending on model. Each fan is rated to 50 cubic feet / minute [1415 Liters/Minute].

Outlet has one or two fans on bottom, depending on model. Each fan is rated to 50 cubic feet / minute [1415 Liters/Minute].

Our standard push/pull design is a positive pressure system.

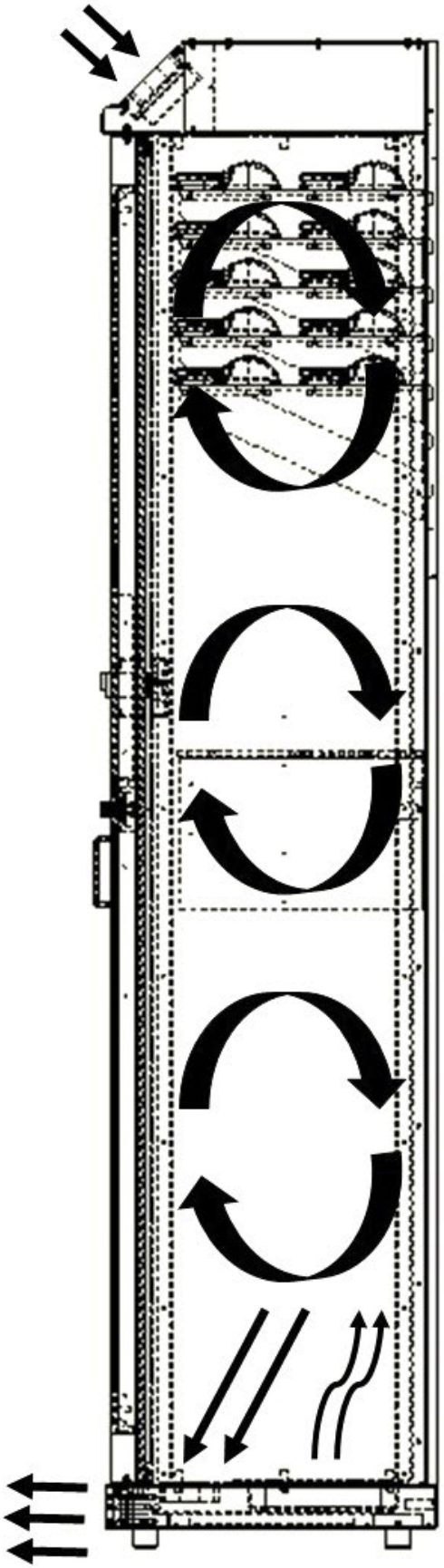

Cabinet Door Adjustment

Scope cabinet doors may fall out of alignment, inhibiting proper door swing. This can be caused by the cabinet shifting during shipping, by uneven flooring or this can happen over time through regular usage. Uneven door alignment can cause scraping during door open and close, damaging your cabinet. We highly recommend that you align your doors prior to regular use, and that you adjust your doors when they begin to not swing freely. Please use the steps below:

Step 1: Every scope cabinet comes equipped with levelers at the bottom of each of the four corners. Locate these levelers and lift up the cabinet so they can be accessed easily. You may need an extra person to assist you.

Step 2: Your scope cabinet was shipped with an adjustment tool. Use this tool to help adjust the leveler screw, tightening for less height or loosening for greater height.

Step 3: Examine your doors to check if they are level. Doors are level when there is no observable uneven gap under either side of the door. A bubble level that you provide may also be helpful. Continue adjustment until both doors are in complete horizontal alignment and swing freely without scraping.