HEAT SEALED POWDER COATED OR STAINLESS STEEL DILATOR STORAGE / DRYING CARTS

SureDry

PART# MAN-DILATOR

DATE ISSUED:
May 2026

Short 24 Dilator Capacity Cart Models:
DSC24SK | DSC24SK-DP

Tall 24 Dilator Capacity Cart Models:
DSC24TK | DSC24TK-DP

Short 36 Dilator Capacity Cart Models:
DSC36SK | DSC36SK-DP

Tall 36 Dilator Capacity Cart Models:
DSC36TK | DSC36TK-DP

TALL MODELS:
Hold dilators up to 39” long

SHORT MODELS:
Hold dilators up to 28” long

HARLOFF
CLINICAL STORAGE BY CAPSA HEALTHCARE

User Manual and Instruction Guide

Table of Contents

Contents of Package 3

Identifying the Cabinet 3

Dilator Cart Features 4

Dilator Holders 5

Operation of the Drying Package 6

How to Replace the Filter 7

Electronic Components 8

Wiring Diagram 9

Dilator Cart Basic Care 10

Contents of Package

PLEASE NOTE:

Harloff only uses electronic components that are certified to CSA and UL standards.

Contents:

- Dilator Holding Membranes (Installed) configured per customer request
- 1x Medical Grade Power Cord
- Cord approved for use in US & Canada

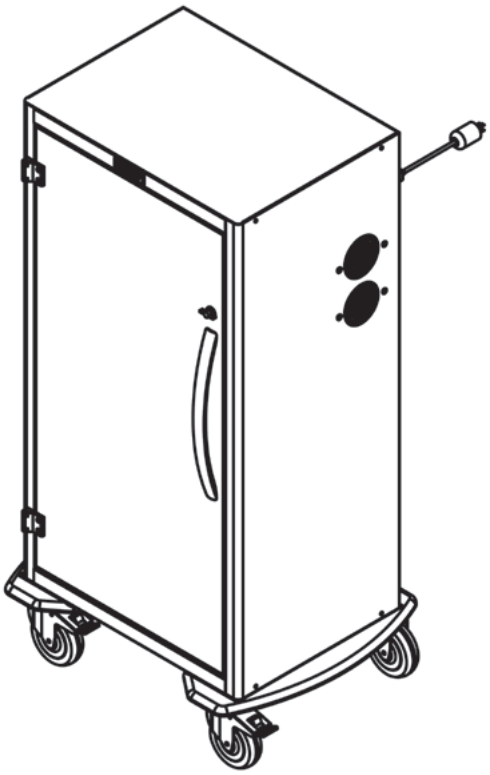

Medical Grade Power Cord 3 ft. [.91 meter]

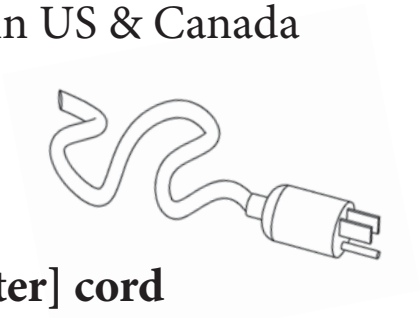

***Optional* 10 ft. [3.05 meter] cord is also available (Part # EXTCORD10)**

Identifying the Cabinet

LOCK OPTIONS

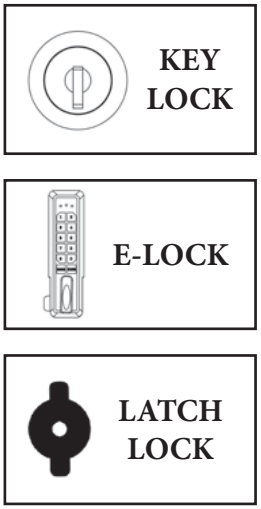

Left Side

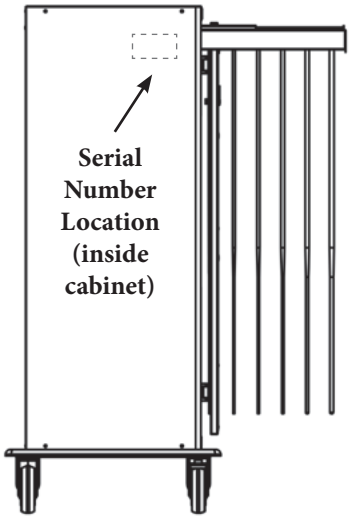

Front

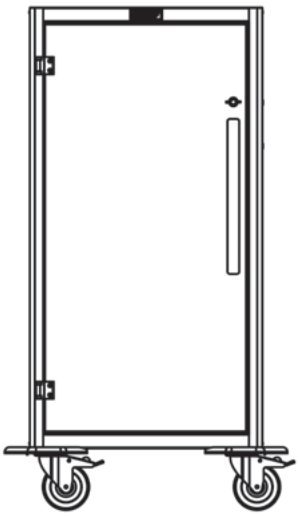

Right Side

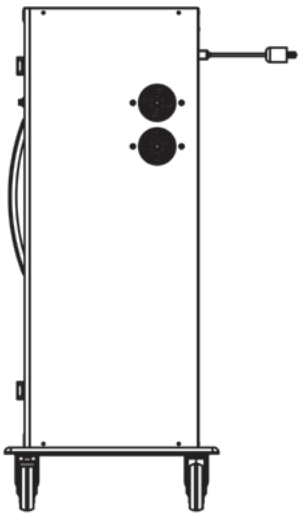

Dilator Cart Features

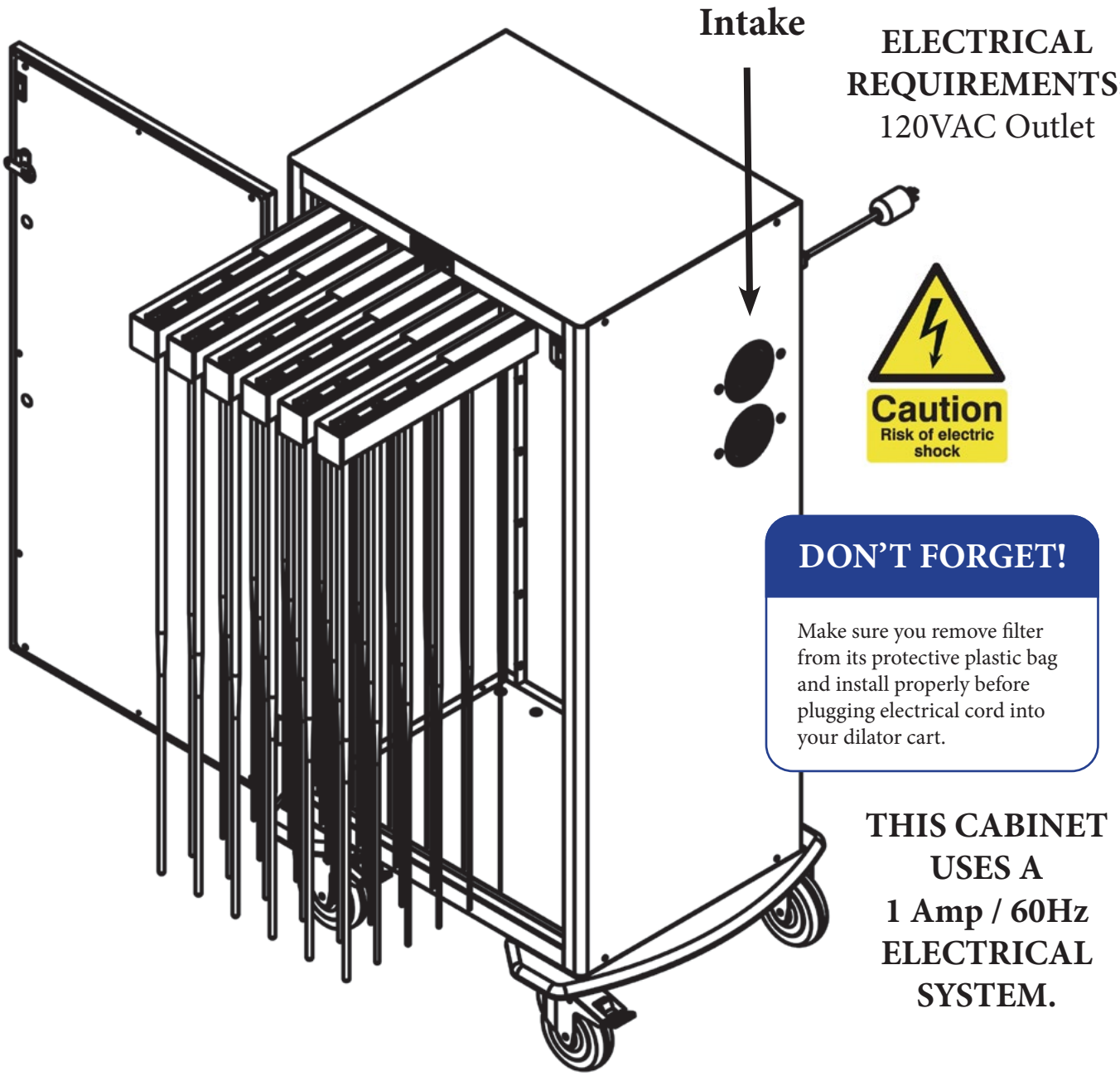

Positive pressure HEPA filtered airflow using two intake fans.

The fan's electrical system is built into the structure for a complete plug and play system.

The timer is inside the cabinet so time settings for drying can be adjusted.

Custom sized membrane holders accommodate 5-20 mm (15-60 Fr) sized dilators.

One thumb screw provides easy access to the intake fans and HEPA Filter.

Dilator Holders

Each dilator cart includes four (DSC24) to six (DSC36) slides with membrane holders which secure Savary-Gilliard® dilators of varying sizes, with a capacity of six dilators per slide. Every dilator cart is configured to have holders accommodate the dilator inventory of the facility it is used in. Configurations can be any combination of the following holders:

"A" slides hold six dilators between the diameter of 5-8 mm (15-24 French).

"B" slides hold six dilators between the diameter of 8-12 mm (24-36 French).

"C" slides hold six dilators between the diameter of 12-16 mm (36-48 French).

"D" slides hold six dilators between the diameter of 16-20 mm (48-60 French).

Split holders can be provided by customer request. Example: "A/B" split holder has 3 "A" dilator membranes and 3 "B" dilator membranes.

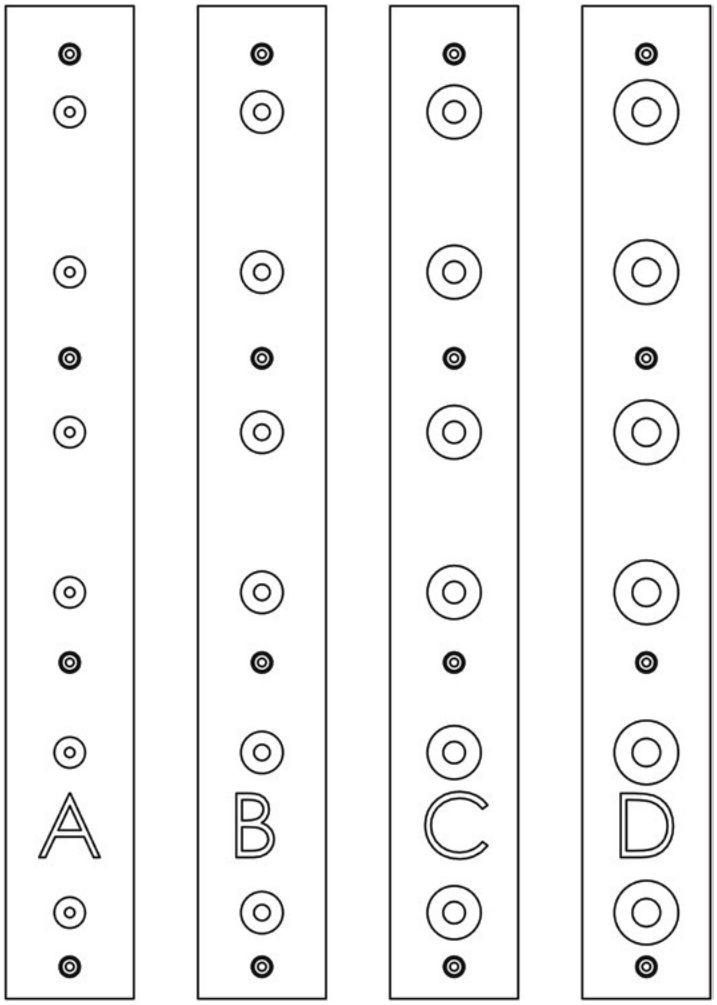

"A" Slide	"B" Slide	"C" Slide	"D" Slide
5-8 mm	8-12 mm	12-16 mm	16-20 mm
15-24 Fr	24-36 Fr	36-48 Fr	48-60 Fr

If you have a split holder the letter on the holder will indicate the larger size of the two. Each hole will have a label specifying the size of dilator to use.

The typical configuration for all dilator carts is as shown above, but it can be customized as needed. If you bought a custom configuration, your slide configuration may differ.

Operation of the Drying Package

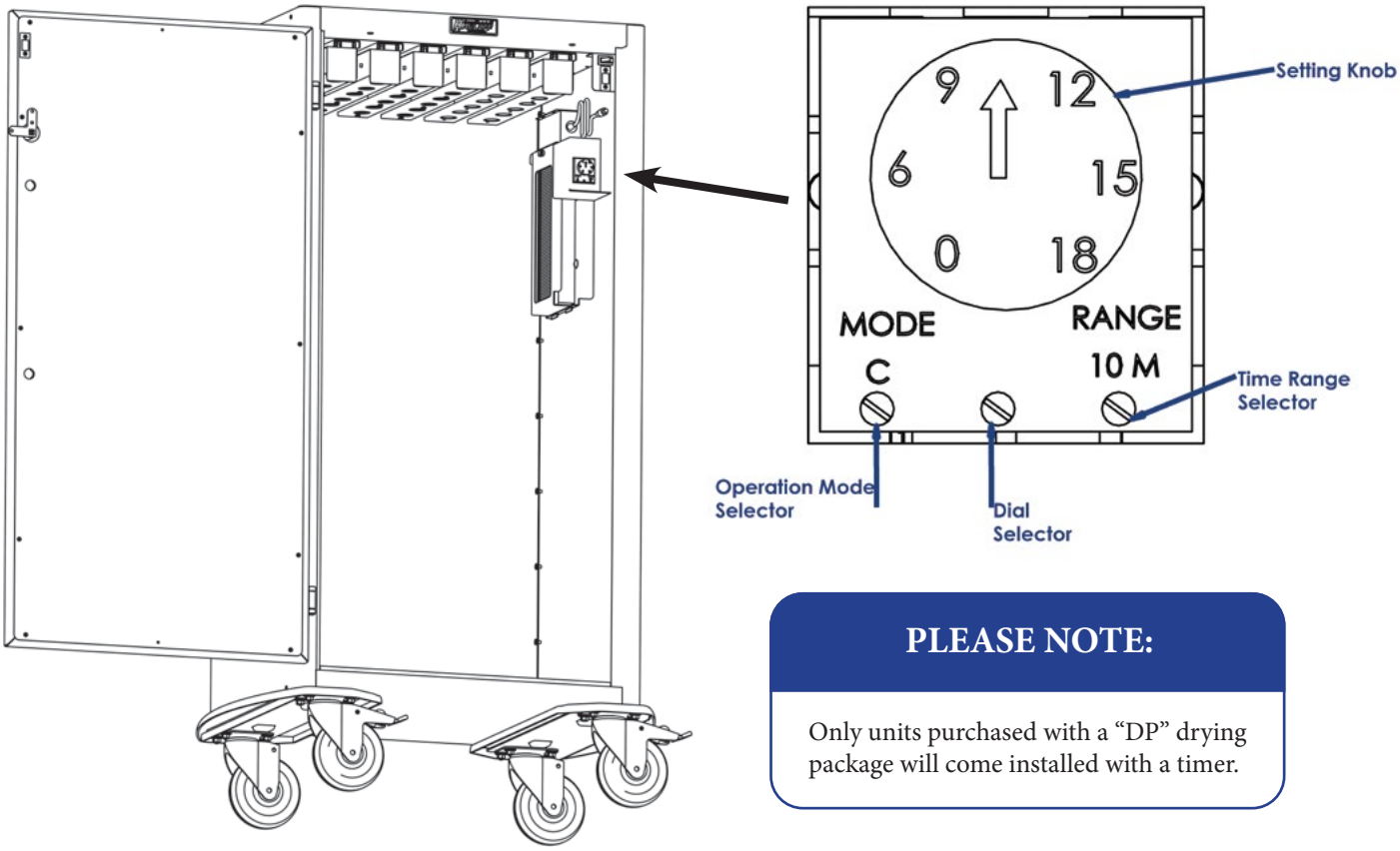

PLEASE NOTE:

Only units purchased with a "DP" drying package will come installed with a timer.

ADJUSTING THE TIMER

Unplug cabinet from power before adjusting the system!

Setting Knob: This knob adjusts the run time of the fans from the display behind it. The arrow indicates the runtime selection. As shown in the image above the selection is between 9 & 12 on a range of 10 minutes. so the fans will run 10 (setting) X 10 M (range) for a total of 100 minutes.

Operation Mode Selector: Preset to mode C. Do not change!

Dial Selector: This changes the numbers displayed behind the Setting Knob.

Time Range Selector: This changes the units of time that the Setting Knob can select. As shown 10 M means each unit is 10 minutes.

The timer settings adjusted above control how long the fans will run once the door is closed. This time will reset whenever the door is opened. Standard factory setting is 100 minutes of runtime (recommended) and can be set to a maximum runtime of 180 hours.

How to Replace the Filter

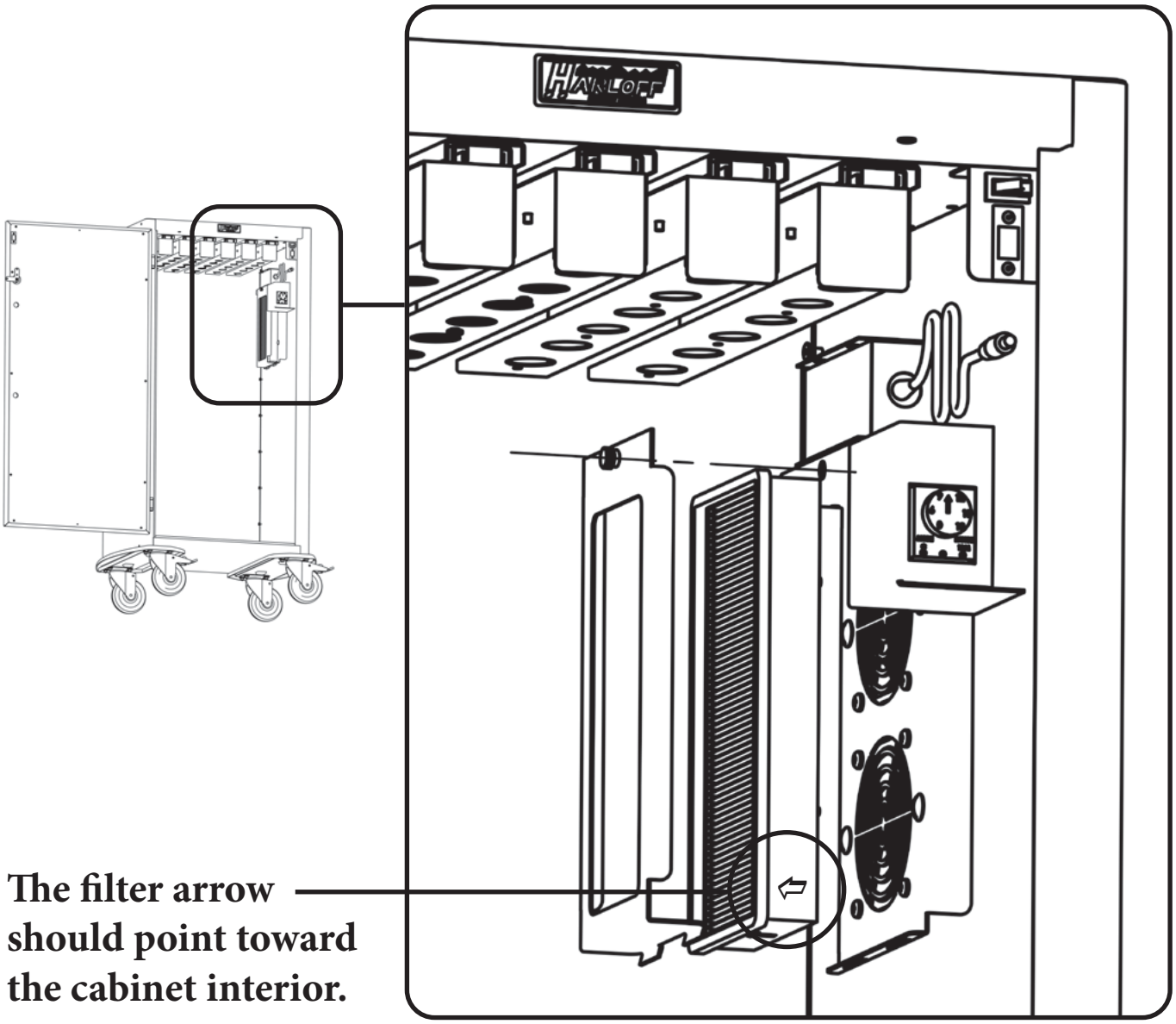

Step 1: With the cabinet door open, locate the thumb screw that secures the faceplate of the filter holder inside the cabinet.

Step 2: Unscrew the thumb screw. Remove the faceplate, which hooks at the bottom of the filter holder, and remove the dirty HEPA filter by pulling it straight out.

Step 3: Place the new HEPA filter into the filter holder with the arrow pointing into the cabinet.

Step 4: Mount the filter faceplate back onto the filter holder, hooking it into the lower slots. Then insert the thumb screw and hand tighten it back into place.

Electronic Components

ELECTRONIC COMPONENT	PICTURE	KEY FEATURES
HARLOFF PART #: 41094A DESCRIPTION: DC TUBE AXIAL FAN LONG DESCRIPTION: 24 VDC FAN W/ MOTOR AIR FLOW DIRECTION TOWARDS LABEL. THERMOPLASTIC CONSTRUCTION.	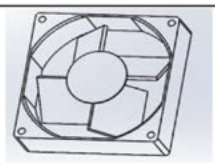	AIR FLOW: 51.2 CFM POWER/CURRENT: 1.2 W, 0.050A NOISE LEVEL: 28 dB OPERATING TEMPS: -10 TO 70 C WEIGHT: 94.8 G SAFETY: UL/CE/VDE APPROVED
HARLOFF PART #: 41081A DESCRIPTION: 24V 50 W AC/DC ADAPTER LONG DESCRIPTION: EXTERNAL DESKTOP CLASS I INPUT (SOLD SEPARATELY) 5.5 MM OUTPUT JACK.	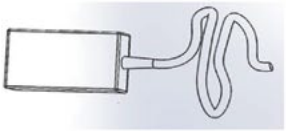	POWER/CURRENT: 50 W, 2.5A OPERATING TEMPS: -20 TO 50 C CORD LENGTH: 4.7 FT. MOISTURE SENSITIVITY: 1 (MSL SCALE) SAFETY: UL/CE APPROVED FOR MEDICAL APPLICATIONS. LEAD FREE STATUS: LEAD FREE/ RoHS COMPLIANT.
HARLOFF PART #: 41084 DESCRIPTION: ANALOG TIMER GT3A-4 LONG DESCRIPTION: 11-PIN MULTI-MODE TIMER WITH ADJUSTABLE TIME SETTINGS		POWER/CURRENT: 0.8 W, 5 A. OPERATING TEMPS: -10 TO 50 C WEIGHT: 80 g TIME RANGE: 0.1S-180HRS. MECH.LIFE : 10,000,000 CYCLES ELEC.LIFE: 50,000 CYCLES SAFETY: UL/CE
HARLOFF PART #: 41089 DESCRIPTION: ADAPTER CORD LONG DESCRIPTION: 3 FT. WALL ADAPTER CORD. MALE PINS TO FEMALE SOCKETS. THREE PRONGED GROUNDED WALL PLUG HOSPITAL		CURRENT: 10 A. OPERATING TEMPS: UP TO 105 C CORD LENGTH: 10 FT. INPUT VOLTAGE: 90-264VAC APPROVED COUNTRIES: USA & CANADA. SAFETY: UL/CE HOSPITAL GRADE MOISTURE SENSITIVITY: 1 (MSL SCALE) LEAD FREE STATUS: LEAD FREE/ RoHS COMPLIANT.
HARLOFF PART#: 41085 DESCRIPTION: TIMER SOCKET	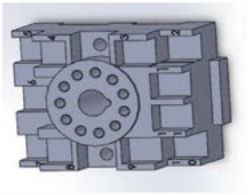	
HARLOFF PART#: 41083 DESCRIPTION: BARREL CONNECTOR, POWER JACK	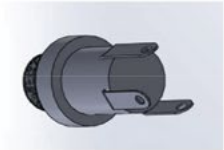	
HARLOFF PART#: 41088 DESCRIPTION: SWITCH PROXIMITY HARLOFF PART#: 41099 DESCRIPTION: TOGGLE SWITCH	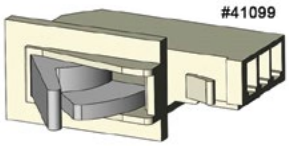	

PLEASE NOTE:

Harloff only uses electronic components that are certified to CSA and UL standards.

All internal wiring was done at the factory using 20 gauge insulated wire, all connections are soldered together and each joint is wrapped with heat shrink.

Wiring Diagram

If your dilator cart is in need of service or repair, WIRING OF THE ELECTRIC DRYING SYSTEM SHOULD BE DONE BY HARLOFF OR AN ELECTRICIAN.

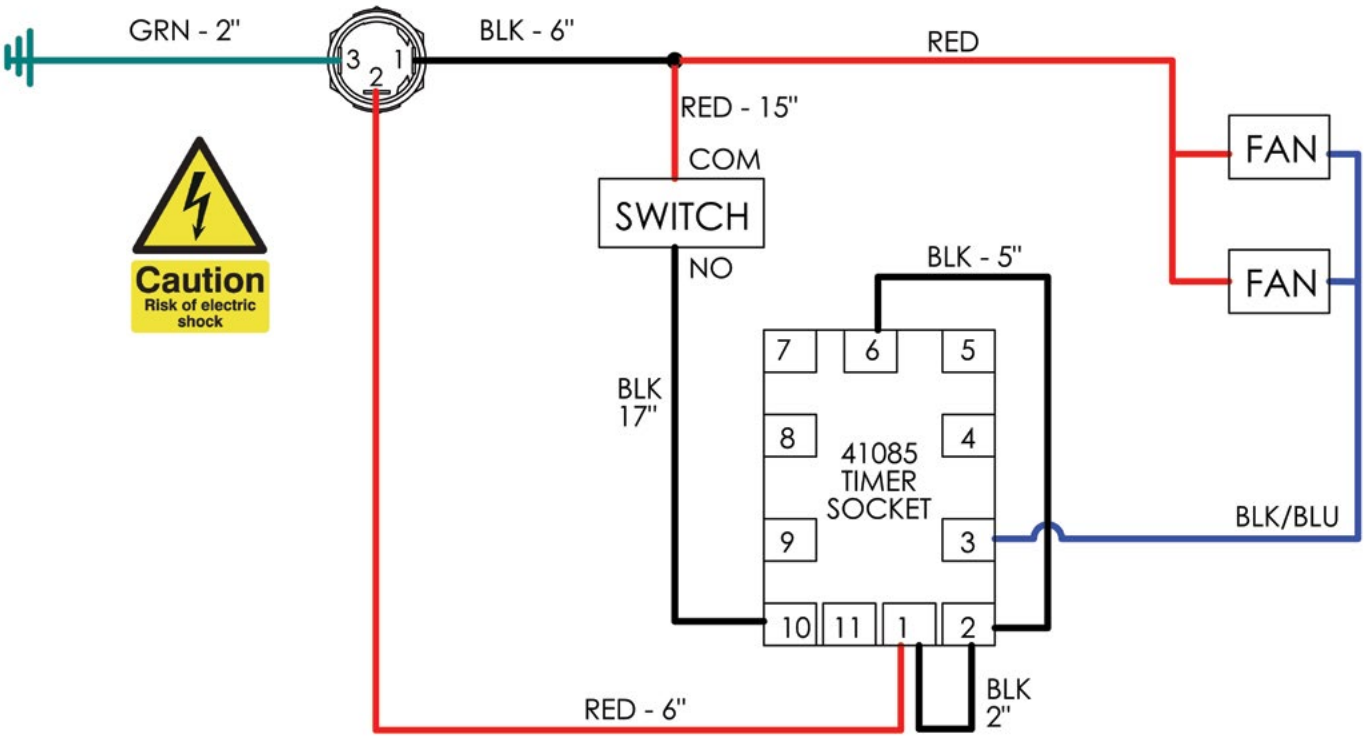

PLEASE NOTE: The number of fans in your dilator cart may vary from this diagram depending on the model of cart that you purchased.

120 VAC / 1 Amp / 60Hz

Dilator Cart Basic Care

Recommended Caring Steps:

1. Keep carts indoors in a climate controlled, ventilated environment.

2. Contact Harloff before attempting repairs.

3. Clean the carts with Harloff's recommended surface cleaners (list available by request or online at www.harloff.com/faqs in the Product Support section) or in accordance with the hospital campus regulations.

4. Thoroughly inspect fans and filter for cleanliness and operation. Harloff suggests filter replacement every 3-6 months, but we recommend that each facility establish their own replacement plan for the HEPA filter. You will need to buy a single HEPA filter **(SCFILTER1)** for replacement, but multi-packs are also available for purchase. Place filter orders at medicalsales@harloff.com or call 800-433-4064.
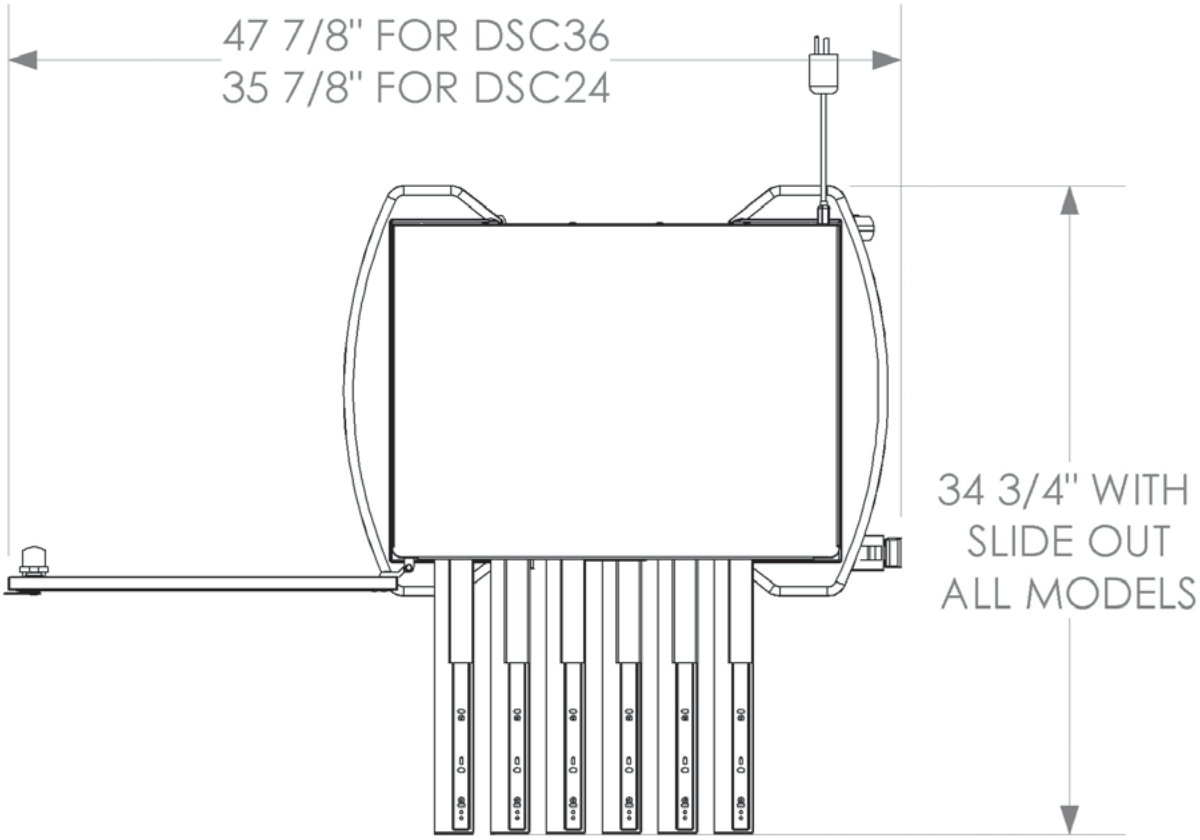
5. Do not place items in front of the intake of the cart. Blocking air access will disturb airflow to cart, affecting its performance, and might cause fan to stop working by overloading it.