HEAT SEALED POWDER COATED OR STAINLESS STEEL PASS THROUGH SCOPE DRYING CABINET

SureDry SCOPE CABINETS

Standard Models:
SC80WTDRDP-10-DSS2305 | SC80WTDRDP-20-DSS2310
SSC80WTDRDP-10-DSS2305 | SSC80WTDRDP-20-DSS2310

User Manual and Instruction Guide

PART# MAN-PASSTHRU **DATE ISSUED:** January 2026

HARLOFF
CLINICAL STORAGE BY CAPSA HEALTHCARE

Table of Contents

Contents of Package 3

Identifying the Cabinet 4

Scope Cabinet Features 5

Installing the Scope Cabinet 6

Cabinet Dimensions 7

Installing into a Wall "Cut Out" 8

Leveling the Cabinet 9

How to Replace the Filters 10

Operation of the Drying Package 11

Electronic Components 12

Internal Wire Diagrams 13

Cabinet Basic Care 14

Air Circulation Data & Model 15

Contents of Package

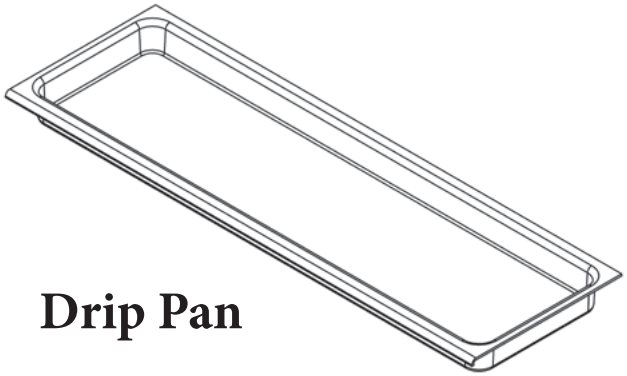

Drip Pan

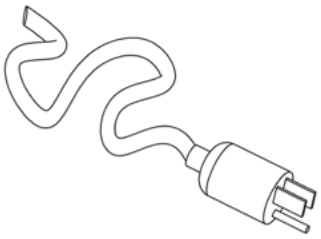

Medical Grade Power Cord 10 ft. [3.05 meter]

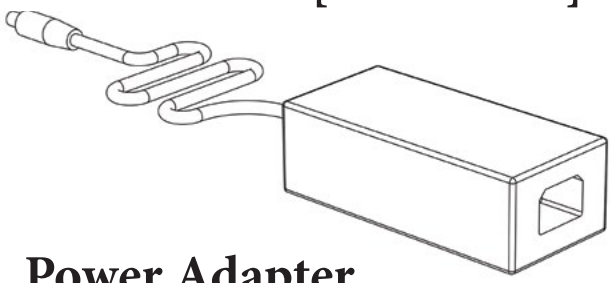

Power Adapter

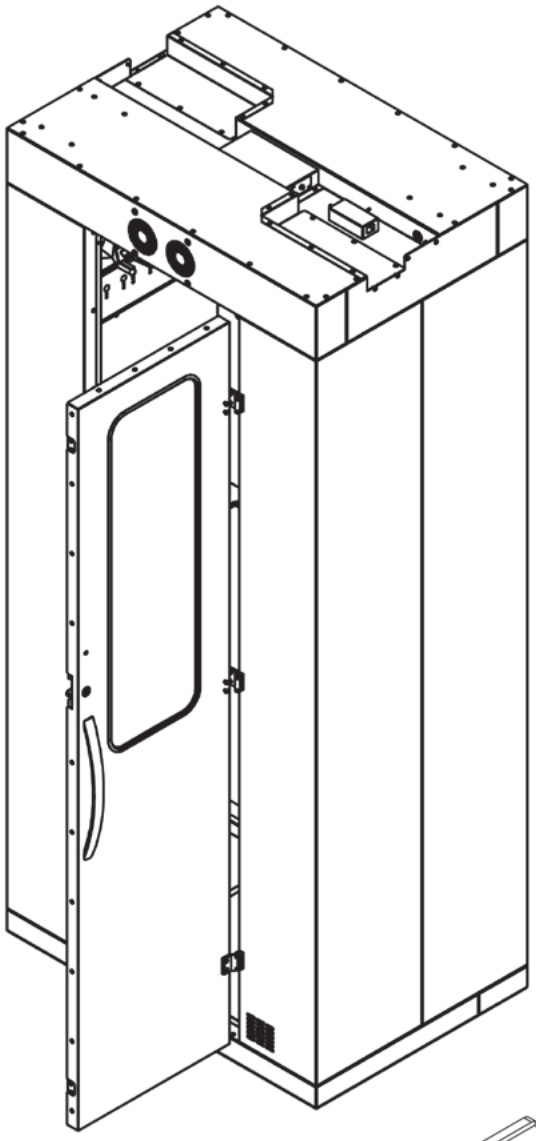

Scope Filter

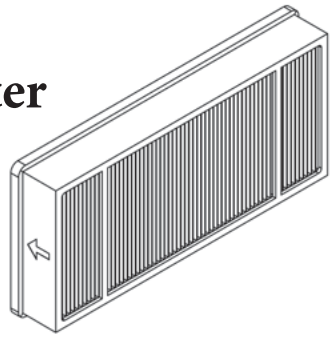

Contents:

- 1x Drip Pan
- Scope Support Arms (Installed)
- Scope Filters, 2x
- 1x Medical Grade Power Cord (Approved for use in US & Canada)

Harloff only uses electronic components that are certified to CSA and UL standards.

Identifying the Cabinet

Front

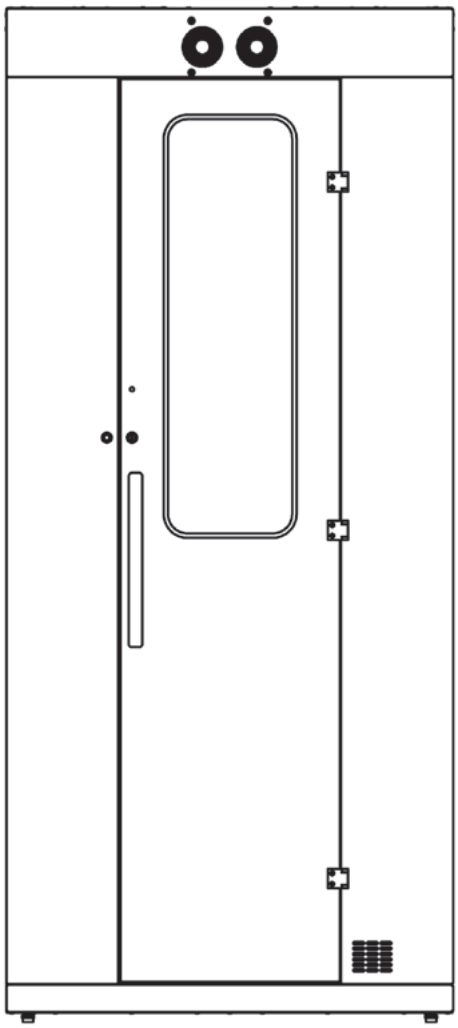

Side

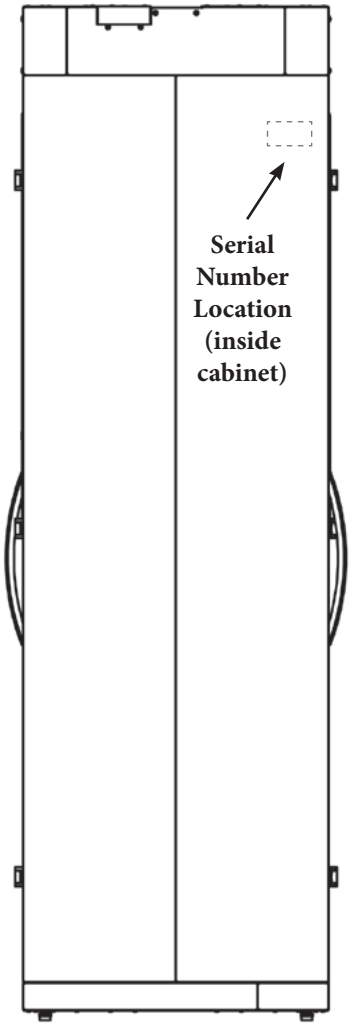

KEY LOCK

E-LOCK

ELP LOCK

EKC LOCK

Harloff only uses electronic components that are certified to CSA and UL standards.

Scope Cabinet Features

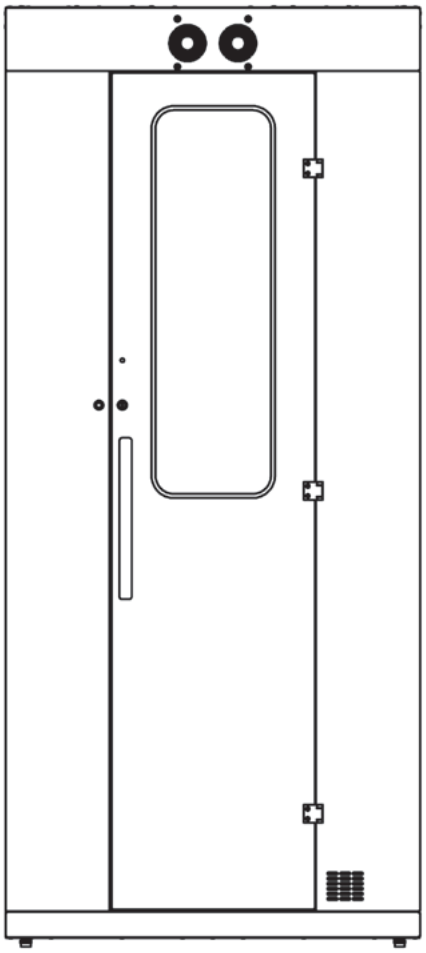

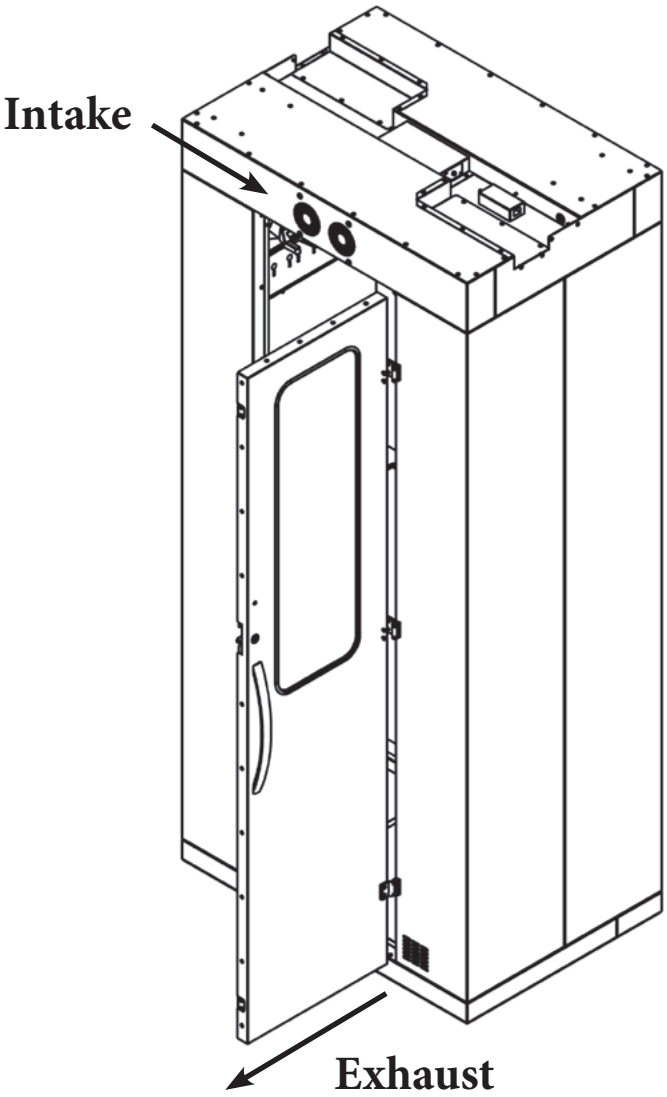

Positive pressure HEPA filtered airflow using intake fans and exhaust fans.

The fan's electrical system is built into the cabinet's structure for a complete plug and play system. **See "INSTALLING THE SCOPE CABINET" (PG. 6) for more info.**

Timer is built in the ceiling so time settings for drying can be adjusted. **See "OPERATION OF THE DRYING PACKAGE" (PG. 11) for more info.**

Tempered glass windows maximize visibility for internal inspections.

Installing the Scope Cabinet

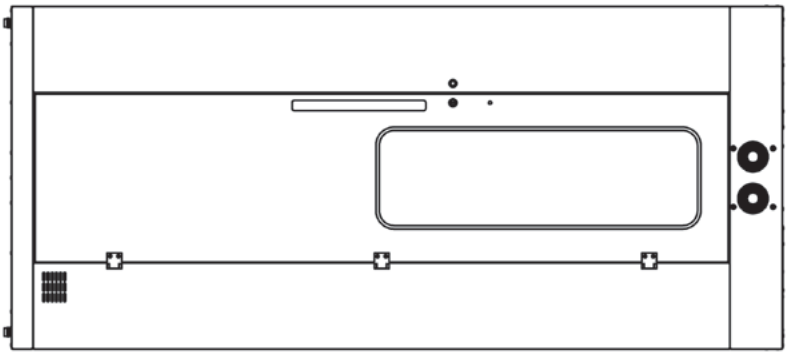

Step 1: Open the crate and inspect for shipping damages. Cabinet is shipped on its side as shown.

Step 2: Transport the cabinet, remaining flat on the pallet, to it's final destination.

Step 3: Once the cabinet is ready to lift into place, we recommend that a team of two or more tip the cabinet into an upright position.

Step 4: Remove Drip pan from the packaging and place into the cabinet as shown.

Step 5: Open the HEPA filter panel as shown on page 10. After removing your filters from their plastic bags insert them into the filter enclosures, then close and secure the panel.

Step 6: Position the cabinet against or inside of a wall such that the power connection on the top of the cabinet is within reach of the nearest wall outlet. Electrical outlets located high on the wall are ideal, otherwise you may need to use an extension cord.

Step 7: Plug the power cord into the power adapter on the top of the cabinet, then plug the other end into the provided power brick. The brick should rest on the cabinet top with the plug exiting through the top channel. Then plug the cord into the wall outlet. Fans should turn on if the doors are closed.

Step 8: Test system by opening the doors. The fans will turn off when the doors are open.

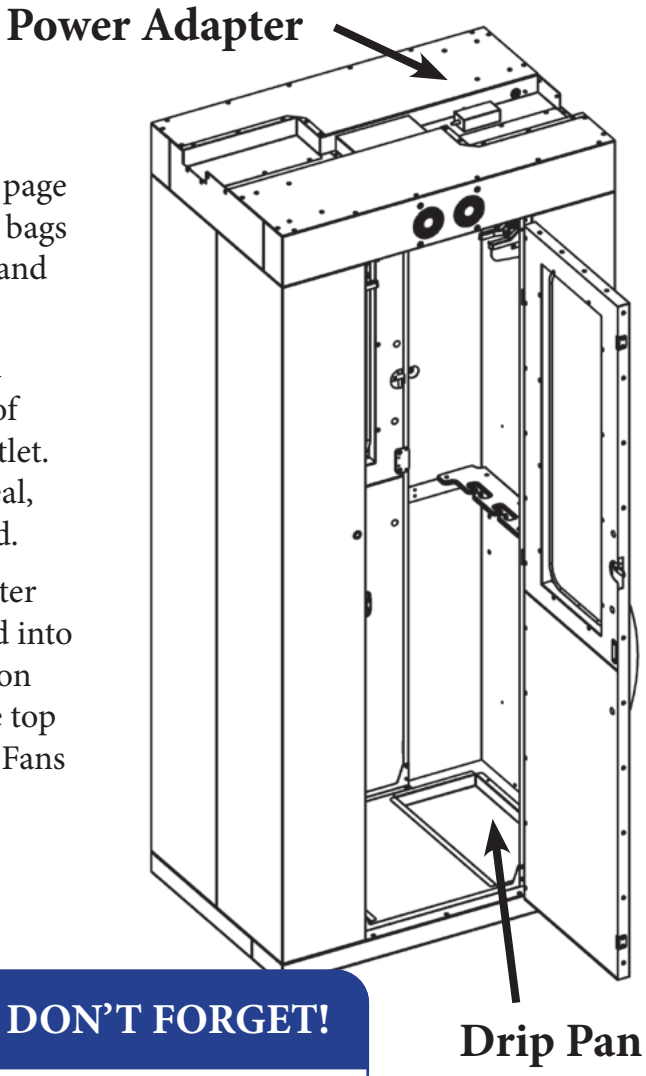

ELECTRICAL REQUIREMENTS: 120V AC Outlet

DON'T FORGET!

Make sure you remove ALL filters and drip pan from their protective plastic bags before plugging in your scope cabinet.

Cabinet Dimensions

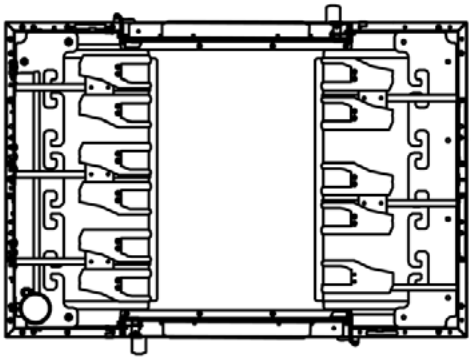

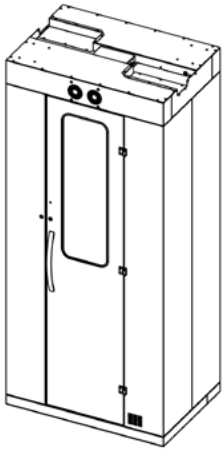

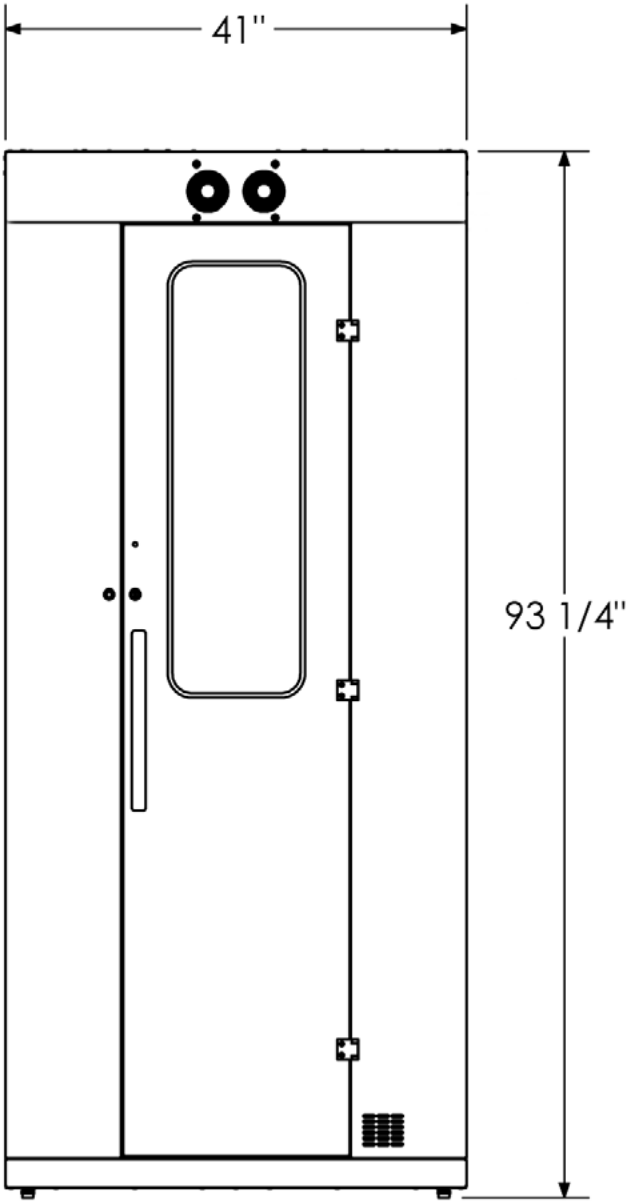

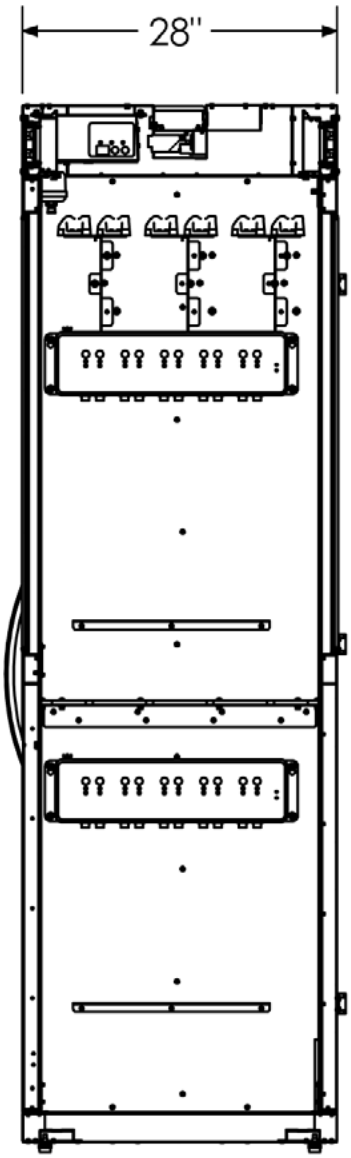

Installing into a Wall "Cut Out"

• Before making any changes, consult with your facilities and maintenance team to prepare your wall for installation. Each facility must follow their own guidelines regarding wall construction and scope cabinet drying requirements.

• Pass through cabinets are free standing and are not designed to be secured to your wall. The two sides of your cabinet are designed to be placed flush to the wall, while the front and back of your cabinet (with the door and venting) is designed to be accessible and open. **DO NOT COVER** any intake or exhaust vents as this may cause damage to your drying system.

• Pass through cabinets can be located half in/half out of a wall or located with one side flush to a wall. See examples of each setup in the images below. In either setup, we recommend a minimum of 1/4" of wall clearance around every side of your cabinet.

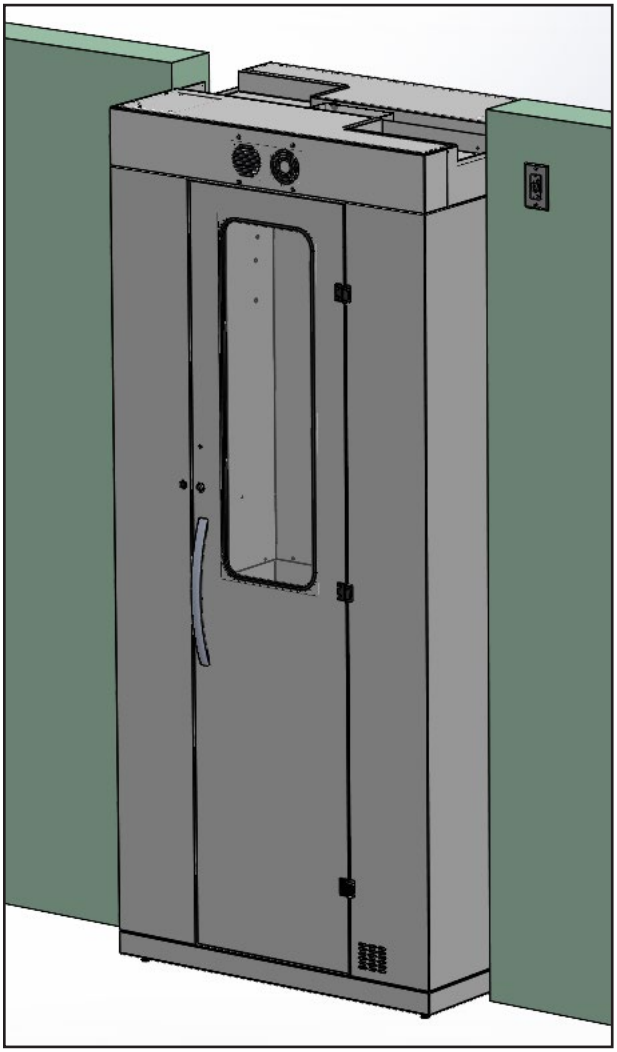

• **Cabinet dimensions:**
93.25" H x 41" W x 28" D
(236.9 cm x 104.1 cm x 71.1 cm)

• **Minimum wall cutout dimensions:**
93.5" H x 41.5" W
(237.5 cm x 105.4 cm)

Leveling the Cabinet

We highly recommend that you level your cabinet prior to regular use, to ensure proper operation and to prevent uneven door alignment which can cause scraping during door open and close. Please use the steps below:

Step 1: Every scope cabinet comes equipped with levelers at the bottom of each of the four corners. Locate these levelers and lift up the cabinet so they can be accessed easily. You may need an extra person to assist you.

Step 2: Adjust the leveler screw by hand, tightening for less height or loosening for greater height. The leveler can also be adjusted with a 3/8" open end wrench.

Step 3: Examine your doors to check if they are level. Doors are level when they open and close cleanly and there is no observable uneven gap around the top or bottom of the door. A bubble level that you provide may also be helpful in cabinet adjustment.

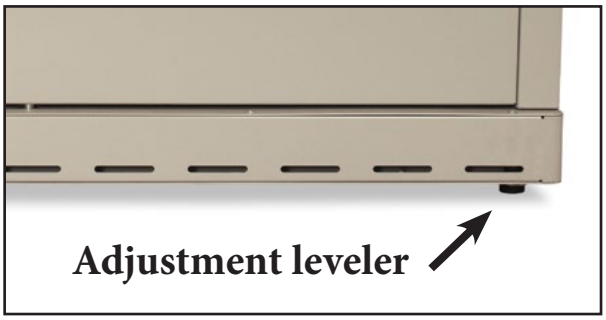

How to Replace the Filters

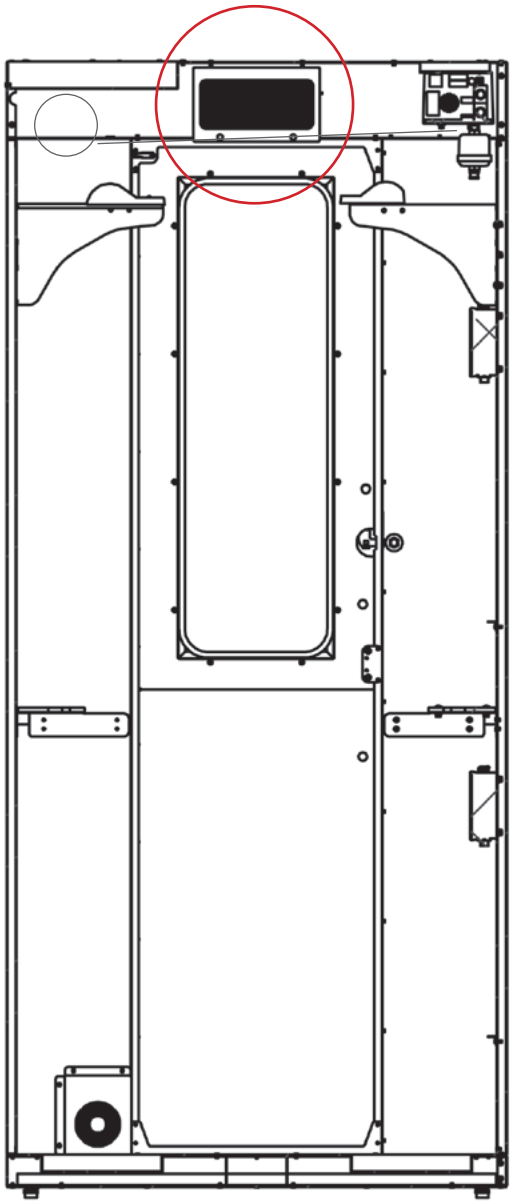

Step 1: HEPA filters are located just above the door on the inside of the cabinet. With the cabinet door open, place a kitchen ladder or a step stool on the outside of your scope cabinet in order to access this inner panel.

Step 2: Remove the two thumb screws on the exterior of the filter holder, then remove the front fan plate.

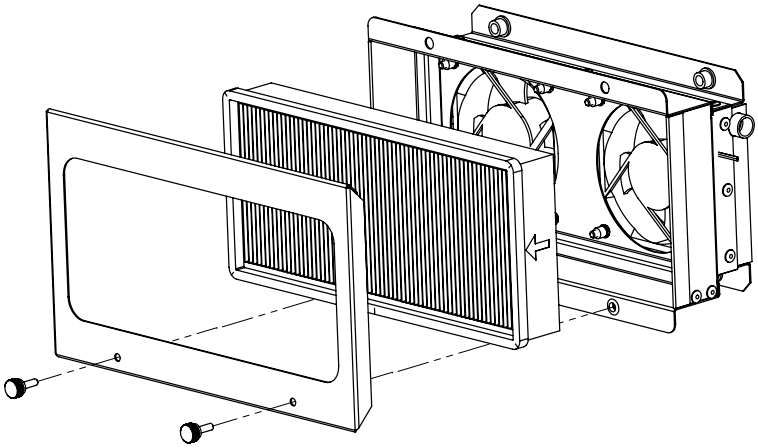

Step 3: Take note of the markings on your existing filter which indicate the direction of air flow (air flows toward the inside of the cabinet). Remove your dirty HEPA filter by sliding it directly toward you, then properly dispose of it.

Step 4: Remove the new replacement filter from its packaging, then slide it into the the fan bracket with the air flow marker pointed toward you.

Step 5: Align the fan plate over the filter with the screw holes on the bottom. Reattach the two thumb screws and affix the bracket into place hand tight.

Step 6: Repeat this process with the HEPA filter on the opposite side of the cabinet.

PLEASE NOTE:

Follow guidance from your facility to determine how often to replace HEPA filters.

A small ladder or a step stool is recommended to replace the HEPA filters.

Operation of the Drying Package

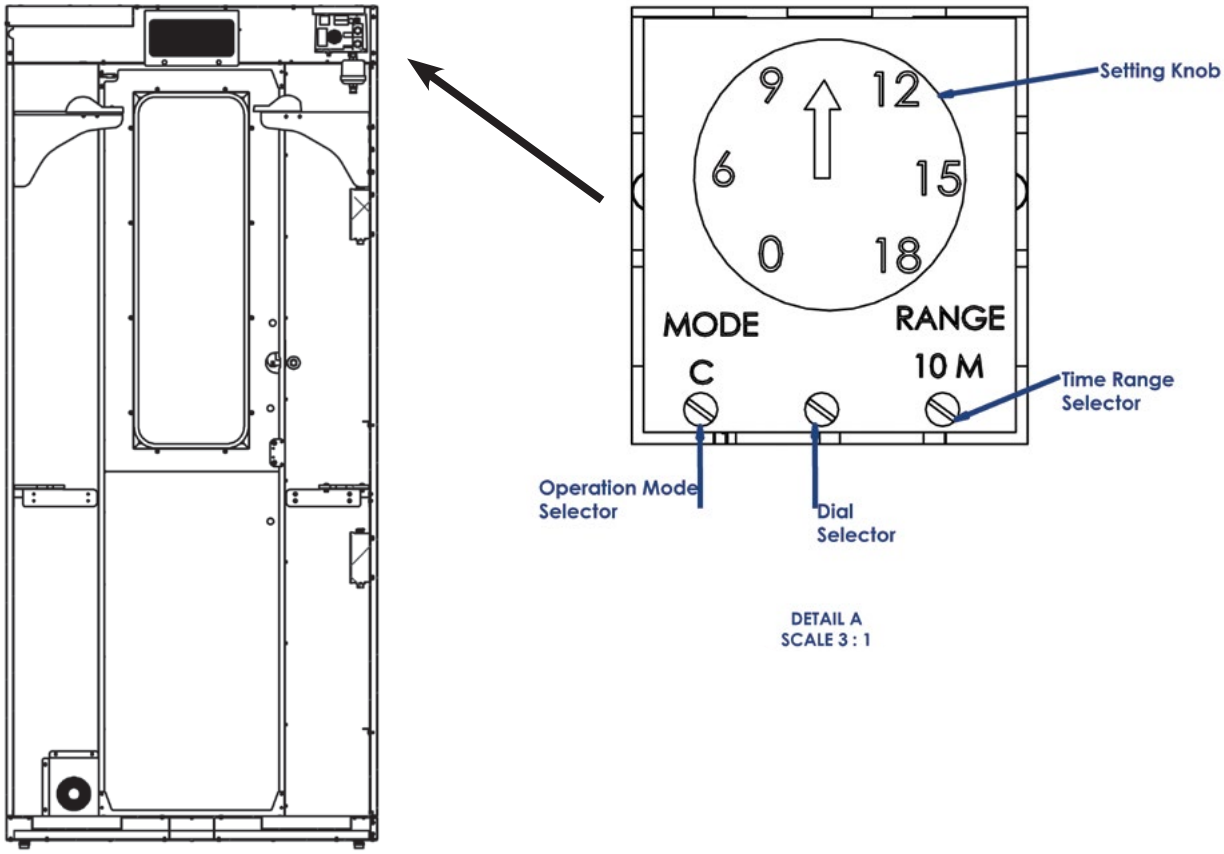

Unplug cabinet from power before adjusting the system!

Setting Knob: This knob selects the run time of the fans from the display behind it. The arrow indicates the runtime selection. As shown the selection is between 9 & 12 on a range of 10 minutes. so the fans will run 10 (setting) X 10 M (range) or 100 minutes.

Operation Mode Selector: Preset to mode C. Do not change!

Dial Selector: This changes the numbers displayed behind the Setting Knob.

Time Range Selector: This changes the units of time that the Setting Knob can select. As shown 10 M means each unit is 10 minutes.

Fan operation: The timer sets how long the fans will run once both doors are closed. This time will reset whenever the doors are opened. Standard factory setting is 100 minutes of runtime and can be set to a maximum runtime of 180 hours.

Electronic Components

ELECTRONIC COMPONENT	PICTURE	KEY FEATURES
HARLOFF PART #: 41094A DESCRIPTION: DC TUBE AXIAL FAN LONG DESCRIPTION: 24 VDC FAN W/ MOTOR AIR FLOW DIRECTION TOWARDS LABEL. THERMOPLASTIC CONSTRUCTION.	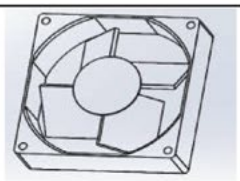	AIR FLOW: 51.2 CFM POWER/CURRENT: 1.2 W, 0.050A NOISE LEVEL: 28 dB OPERATING TEMPS: -10 TO 70 C WEIGHT: 94.8 G SAFETY: UL/CE/VDE APPROVED
HARLOFF PART #: 41081A DESCRIPTION: 24V 50 W AC/DC ADAPTER LONG DESCRIPTION: EXTERNAL DESKTOP CLASS I INPUT (SOLD SEPARATELY) 5.5 MM OUTPUT JACK.	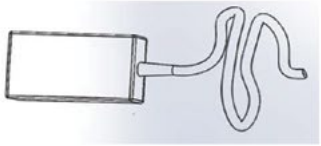	POWER/CURRENT: 50 W, 2.5A OPERATING TEMPS: -20 TO 50 C CORD LENGTH: 4.7 FT. MOISTURE SENSITIVITY: 1 (MSL SCALE) SAFETY: UL/CE APPROVED FOR MEDICAL APPLICATIONS. LEAD FREE STATUS: LEAD FREE/ RoHS COMPLIANT.
HARLOFF PART #: 41084 DESCRIPTION: ANALOG TIMER GT3A-4 LONG DESCRIPTION: 11-PIN MULTI-MODE TIMER WITH ADJUSTABLE TIME SETTINGS		POWER/CURRENT: 0.8 W, 5 A. OPERATING TEMPS: -10 TO 50 C WEIGHT: 80 g TIME RANGE: 0.1S-180HRS. MECH.LIFE : 10,000,000 CYCLES ELEC.LIFE: 50,000 CYCLES SAFETY: UL/CE
HARLOFF PART #: 41089B DESCRIPTION: ADAPTER CORD LONG DESCRIPTION: 10 FT. WALL ADAPTER CORD. MALE PINS TO FEMALE SOCKETS. THREE PRONGED GROUNDED WALL PLUG HOSPITAL		CURRENT: 10 A. OPERATING TEMPS: UP TO 105 C CORD LENGTH: 10 FT. INPUT VOLTAGE: 90-264VAC APPROVED COUNTRIES: USA & CANADA. SAFETY: UL/CE HOSPITAL GRADE MOISTURE SENSITIVITY: 1 (MSL SCALE) LEAD FREE STATUS: LEAD FREE/ RoHS COMPLIANT.
HARLOFF PART#: 41085 DESCRIPTION: TIMER SOCKET	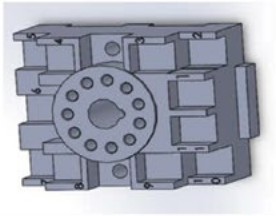	
HARLOFF PART#: 41083 DESCRIPTION: BARREL CONNECTOR, POWER JACK	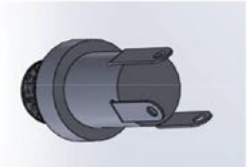	
HARLOFF PART#: 41088 DESCRIPTION: SWITCH PROXIMITY HARLOFF PART#: 41099 DESCRIPTION: TOGGLE SWITCH	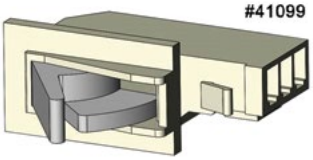	

PLEASE NOTE:

Harloff only uses electronic components that are certified to CSA and UL standards.

All internal wiring was done at the factory using 20 gauge insulated wire, all connections are soldered together and each joint is wrapped with heat shrink.

Wiring Diagram

If your scope cabinet is in need of service or repair,
WIRING OF THE ELECTRIC DRYING SYSTEM SHOULD BE DONE BY HARLOFF OR AN ELECTRICIAN.

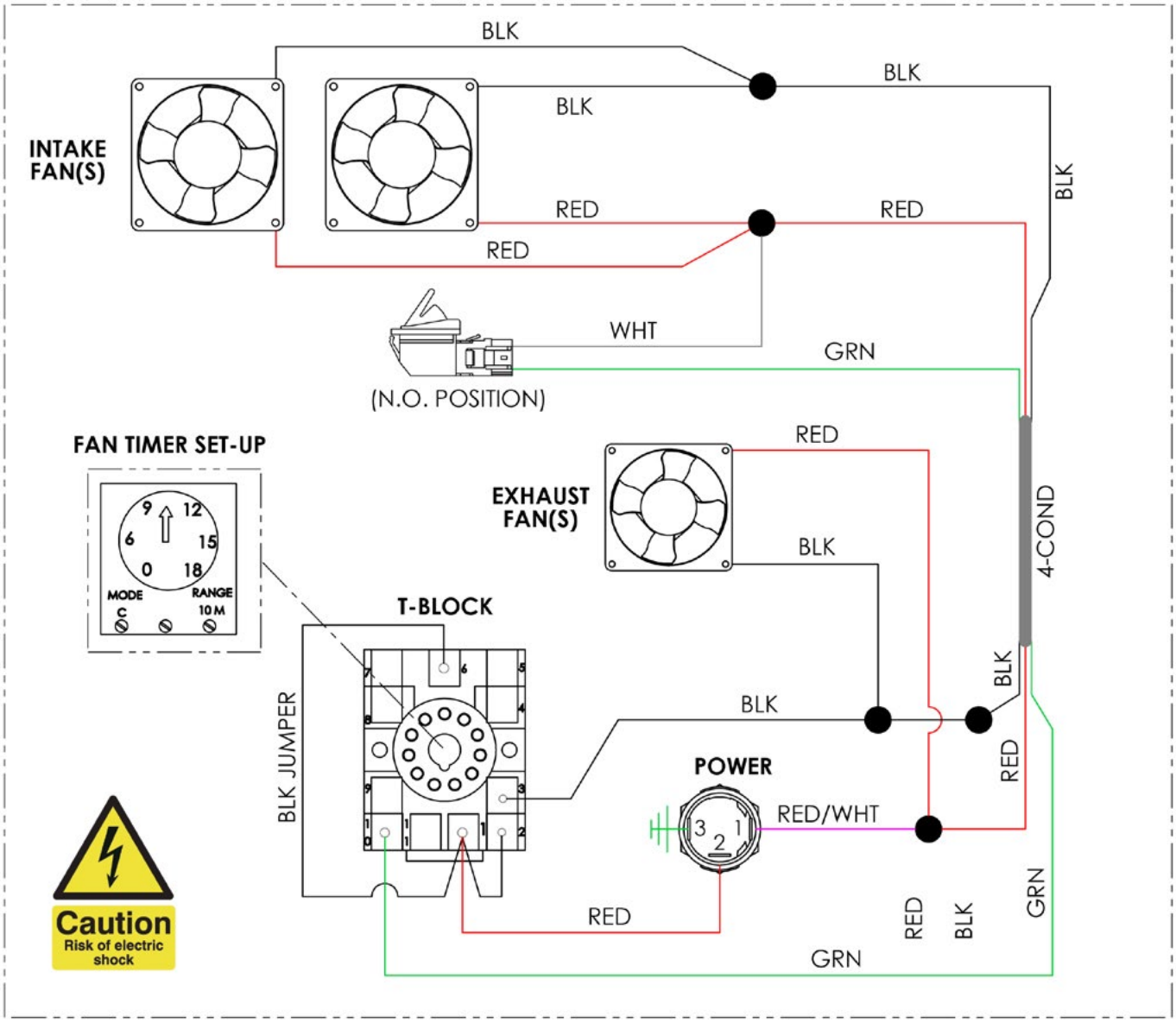

120 VAC / 1 Amp / 60Hz

Cabinet Basic Care

Recommended Caring Steps:

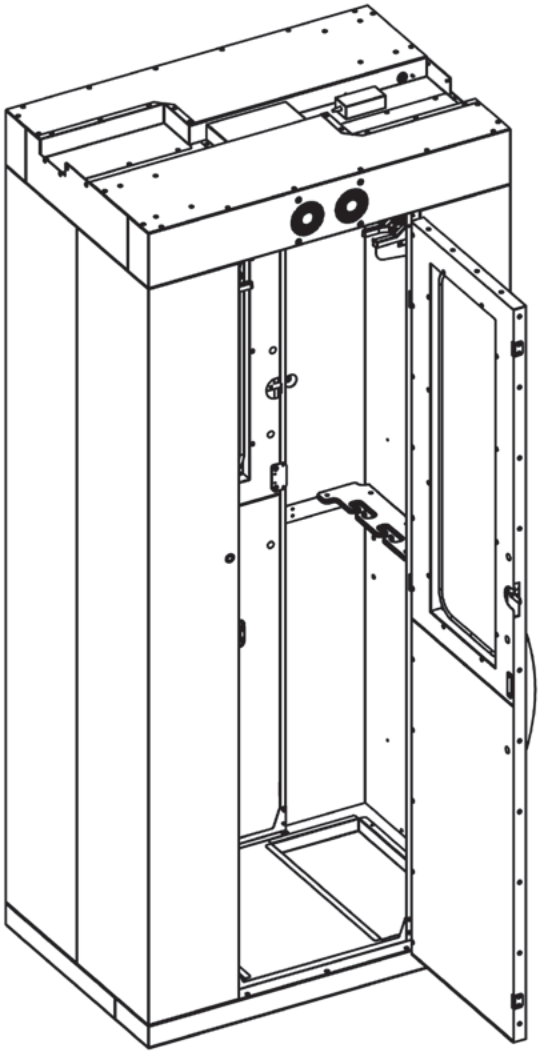

1. Keep cabinets indoors in a climate controlled, ventilated environment.

2. Do not attempt to install or move cabinets alone.

3. Contact Harloff before attempting repairs.

4. Clean the cabinets with Harloff's recommended surface cleaners (list available by request or online at www.harloff.com/faqs in the Product Support section) or in accordance with the hospital campus regulations.

5. Thoroughly inspect fans and filters for cleanliness and operation. Harloff suggests replacement of filters every 3-6 months, but we recommend that each facility establish their own replacement plan for the HEPA filters. You will want to buy a 2-pack of HEPA filters **(SCFILTER2)** for replacement. No filters are installed on bottom fans. Place filter orders at medicalsales@harloff.com or call 800-433-4064.

6. Do not place items in front of the lower exhaust or on top of the intake of the cabinet. Blocking air access will disturb airflow to cabinet, affecting its performance, and might cause fan to stop working by overloading it.

Air Circulation Data & Model

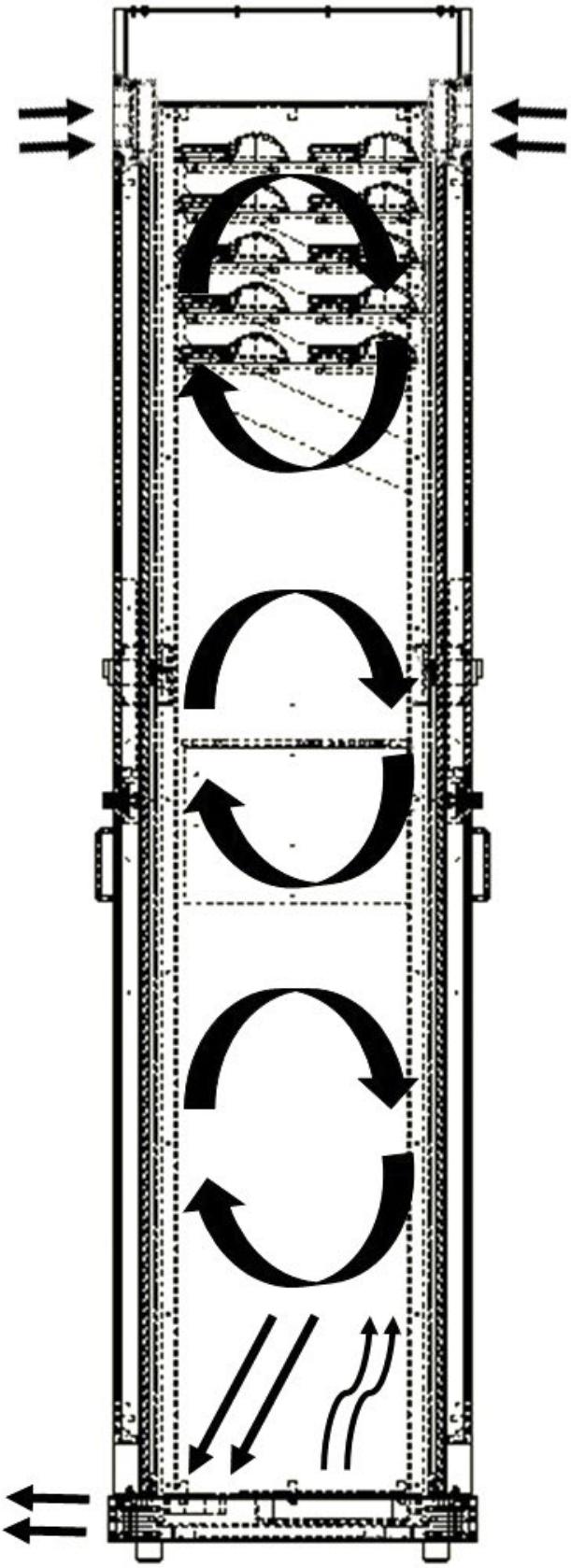

INTAKE:
Air flows in through the top intake fans, and feeds cabinet through the HEPA filters.

EXHAUST:
The lower fans pull the air out at the bottom of the cabinet.

NOTE:
Inlet has two to three fans on top, depending on model. Each fan is rated to 50 cubic feet / minute [1415 Liters/Minute].

Outlet has one or two fans on bottom, depending on model. Each fan is rated to 50 cubic feet / minute [1415 Liters/Minute].

Our standard push/pull design is a positive pressure system.