Wiring Diagram

Commercial Gas-Fired - UG65, UG73 Optional Power Vent

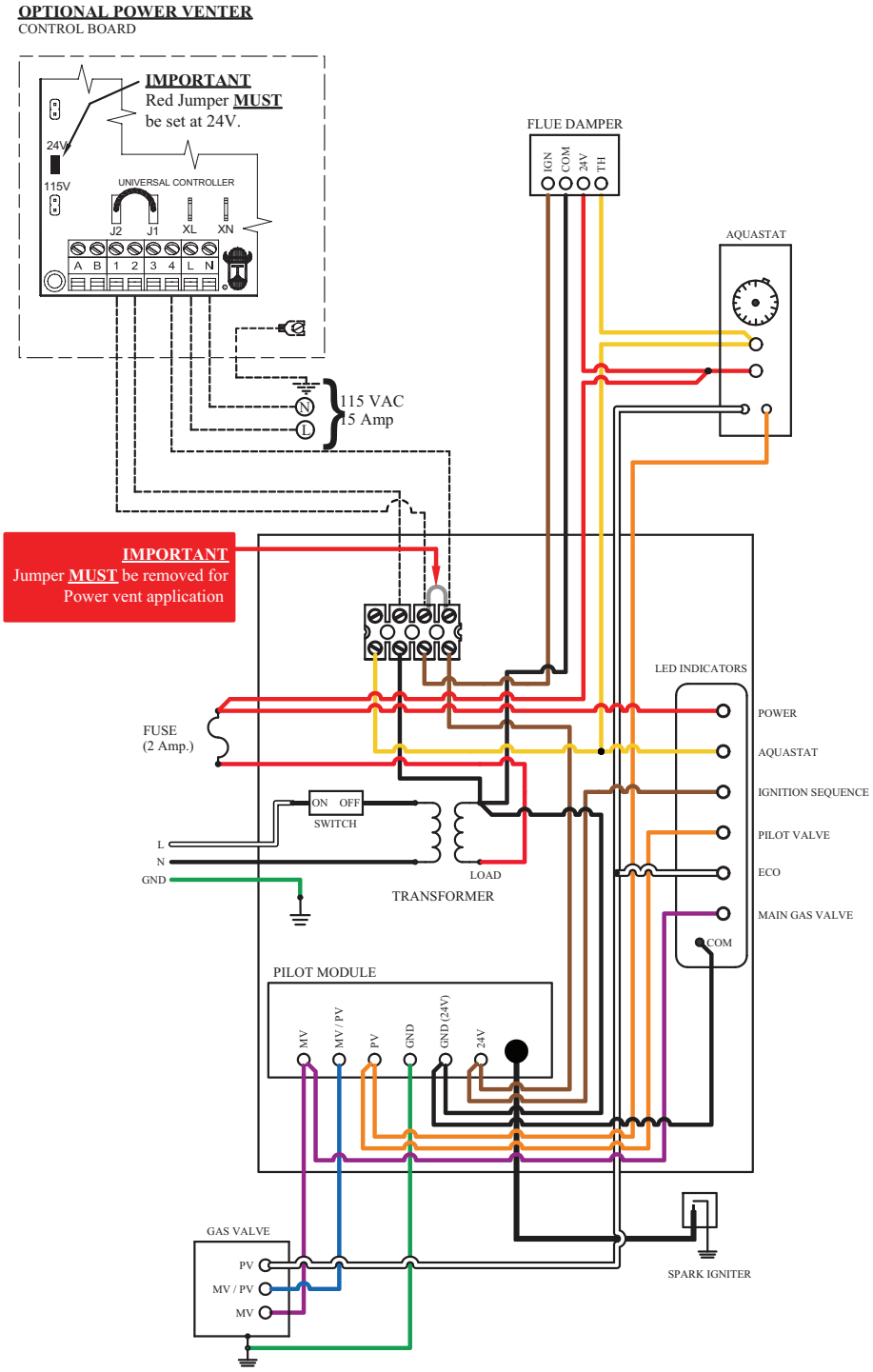

© 2024 A. O. Smith Enterprises Ltd. All rights reserved. Specifications are subject to change without notice.
Giant | www.giantinc.com | 1-800-363-9354 | 11021 Notre-Dame St. East | Montreal-East, QC H1B 5H3