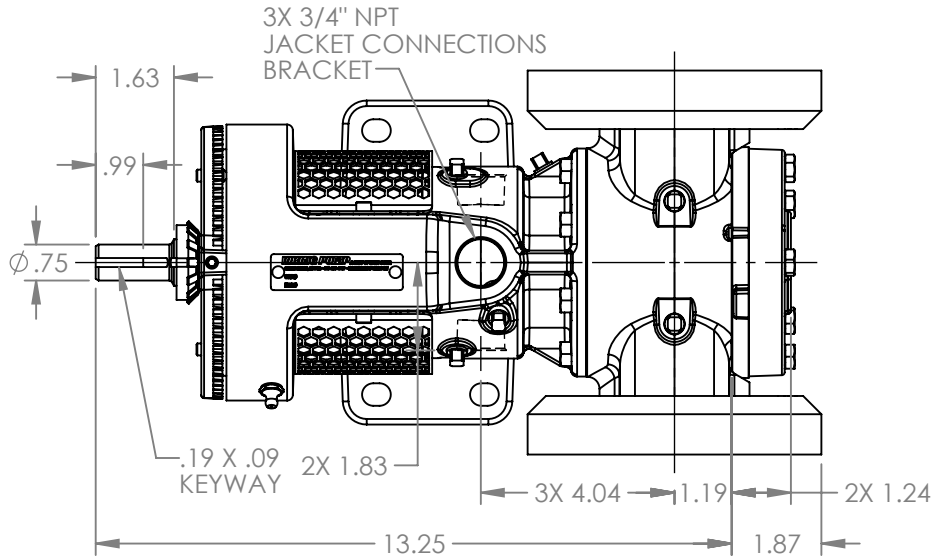

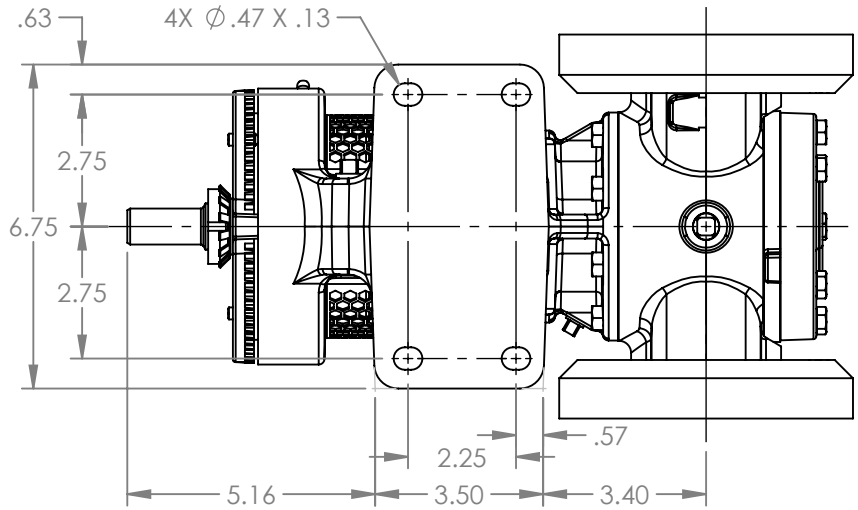

VIEW A-A

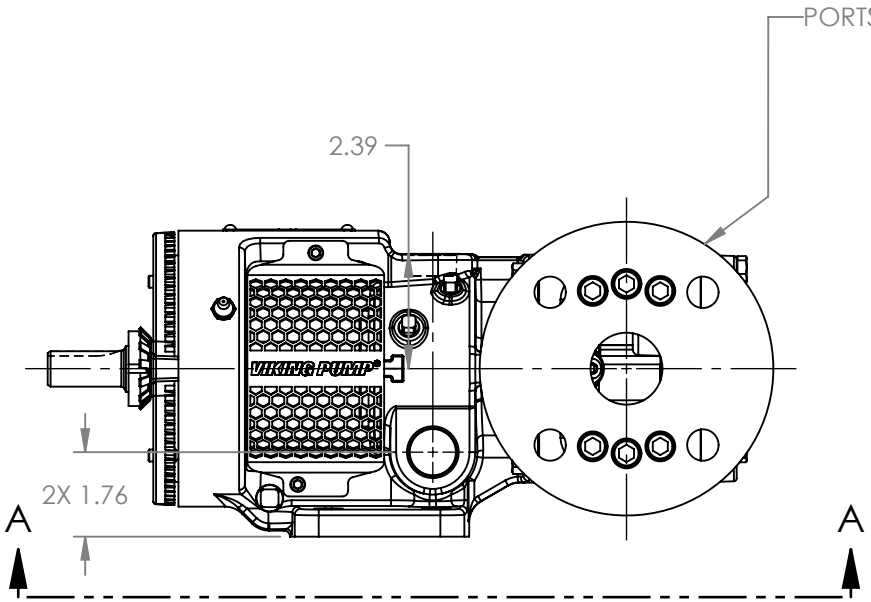

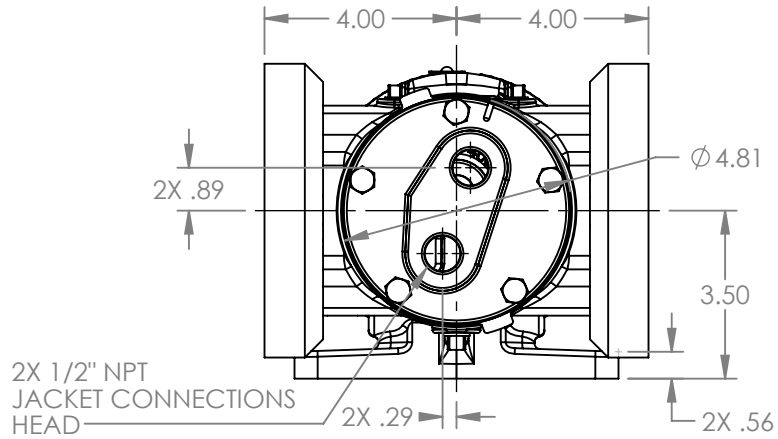

MODELS WITH OPTIONAL FLANGED PORTS:
H224C, H1224C, H4224C,
HL224C, HL1224C, HL4224C

NOTES:
1. ALL DIMENSIONS ARE FOR REFERENCE ONLY.

STATE	Released	01/20/2026	DIMENSIONS ARE IN INCHES	VIKING PUMP	VIKING PUMP, INC. A Unit of IDEX Corporation Cedar Falls, IA 50613 U.S.A. VIKINGPUMP.COM	THIS DRAWING IS THE PROPERTY OF VIKING PUMP, INC. AND IS PROPRIETARY IN GENERAL AND DETAIL. IT SHALL NOT BE COPIED OR ITS CONTENTS REVEALED TO OUTSIDE PARTIES WITHOUT THE WRITTEN CONSENT OF VIKING PUMP, INC.	3D	DWG. NO. HV-4300	SHEET 1 OF 1	REV. A.0
DRAWN	aeverhardt	01/14/2026	PROJECT:E399							01/20/2026
CHECKED	DTL	01/20/2026	WAS:							