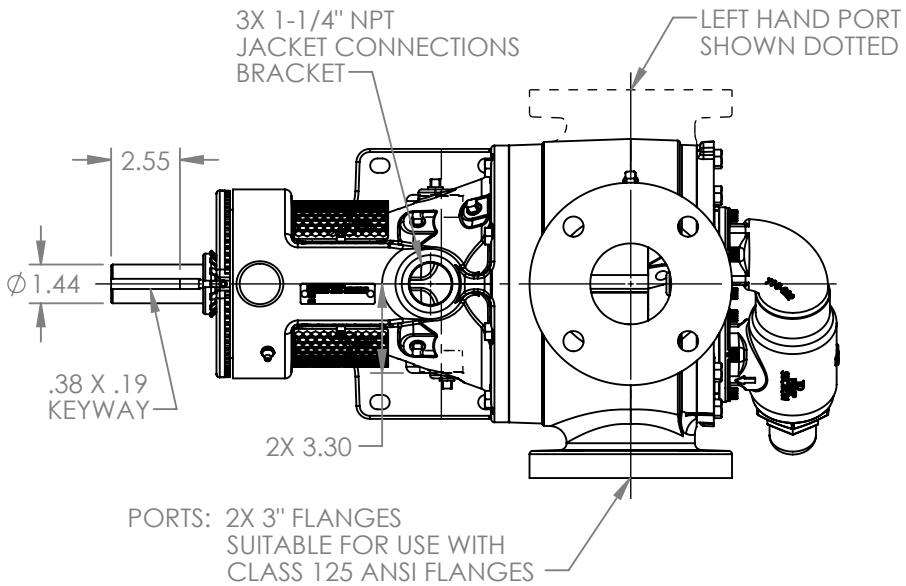

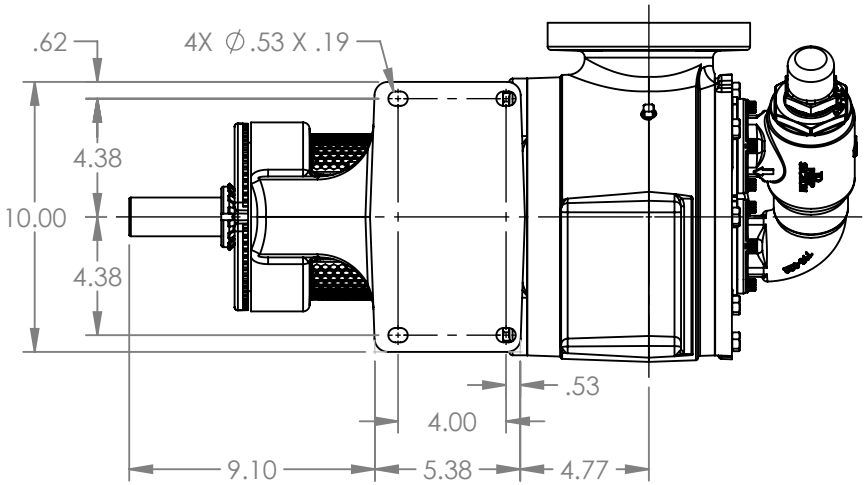

VIEW A-A

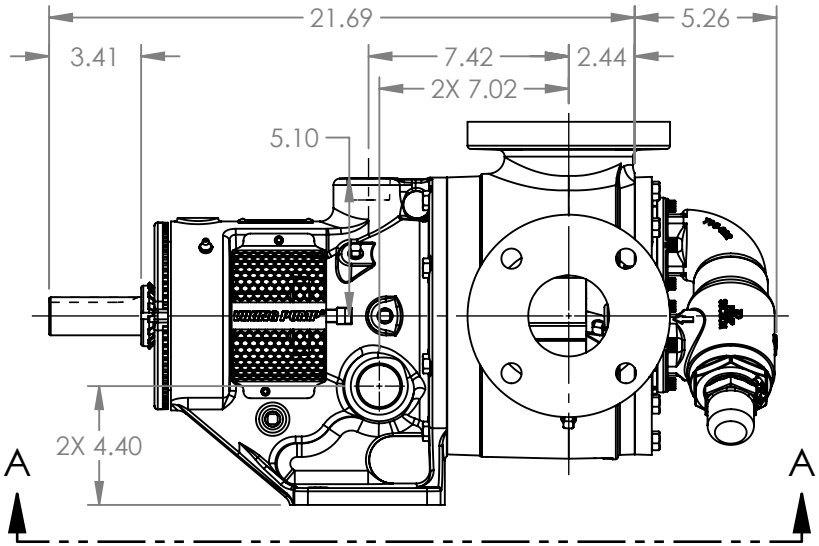

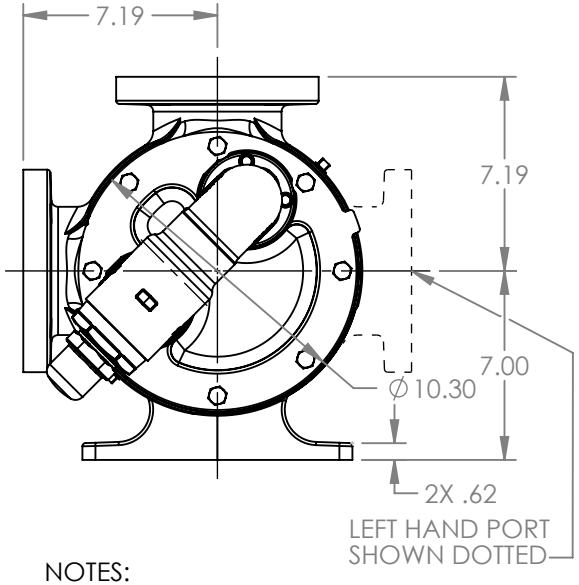

STANDARD MODELS:
LS224C, LS1224C, LS4224C

NOTES:
1. ALL DIMENSIONS ARE FOR REFERENCE ONLY.

STATE	Released	10/29/2025	DIMENSIONS ARE IN INCHES	VIKING PUMP	VIKING PUMP, INC. A Unit of IDEX Corporation Cedar Falls, IA 50613 U.S.A. VIKINGPUMP.COM	THIS DRAWING IS THE PROPERTY OF VIKING PUMP, INC. AND IS PROPRIETARY IN GENERAL AND DETAIL. IT SHALL NOT BE COPIED OR ITS CONTENTS REVEALED TO OUTSIDE PARTIES WITHOUT THE WRITTEN CONSENT OF VIKING PUMP, INC.	3D	DWG. NO. LV-4863	SHEET 1 OF 1	REV. A.0
DRAWN	DLende	Oct 29 2025 00:00 AM	PROJECT E399							5/14/2025
CHECKED	JB	10/29/2025	WAS:							