PUMP MODEL	TRA20-1300
ORIENTATION	HORIZONTAL
COVER TYPE	STANDARD
INLET	4.0" DIN 2633
DISCHARGE	4.0" DIN 2633
SPECIALS	NONE

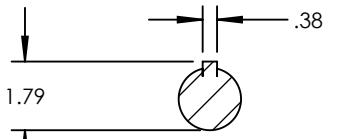

SECTION A-A

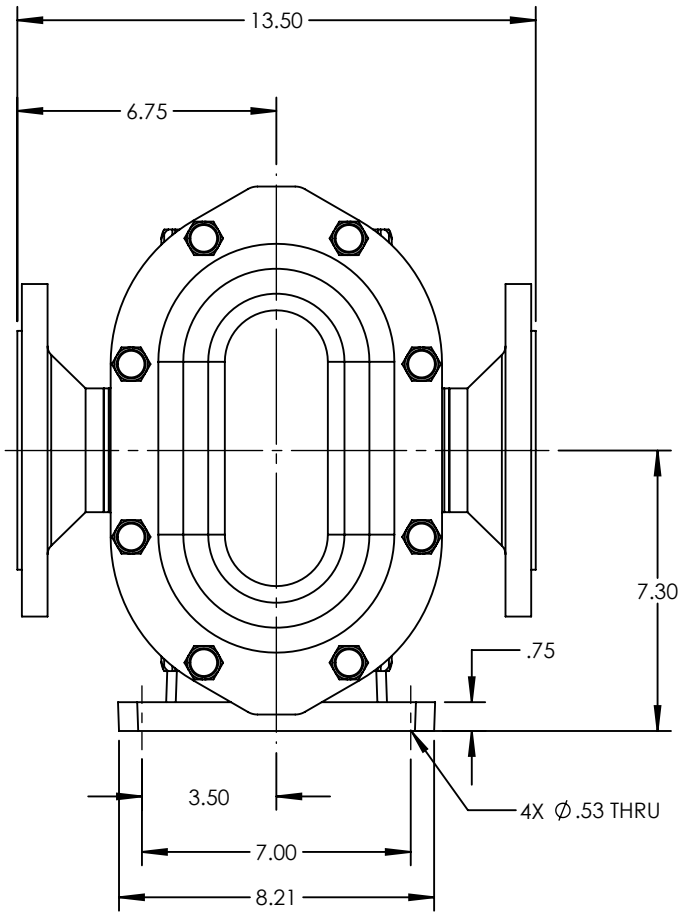

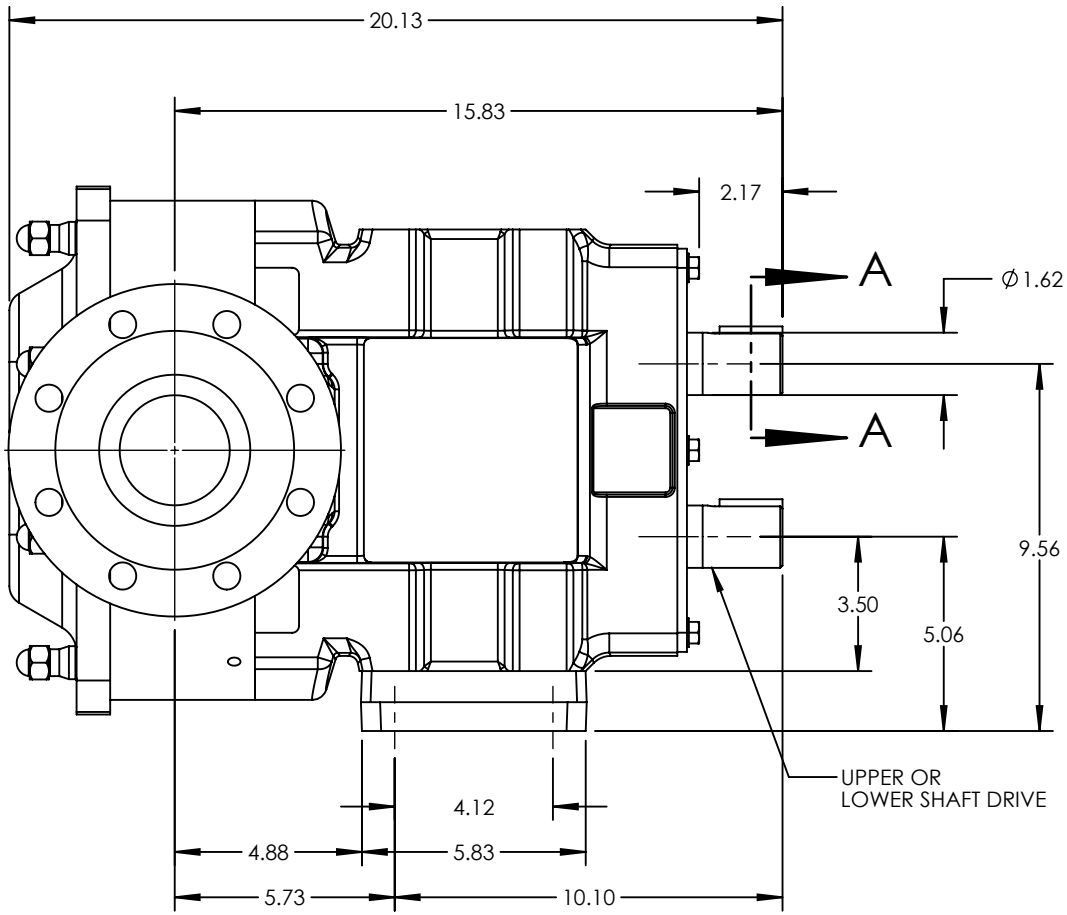

NOTES:
1. THIS IS NOT A CERTIFIED DRAWING. USE FOR GENERAL INSTALLATION ONLY.

STATE	Released	02/15/2024	DIMENSIONS ARE IN INCHES	VIKING PUMP	VIKING PUMP, INC. A Unit of IDEX Corporation Cedar Falls, IA 50613 U.S.A. VIKINGPUMP.COM	THIS DRAWING IS THE PROPERTY OF VIKING PUMP, INC. AND IS PROPRIETARY IN GENERAL AND DETAIL. IT SHALL NOT BE COPIED OR ITS CONTENTS REVEALED TO OUTSIDE PARTIES WITHOUT THE WRITTEN CONSENT OF VIKING PUMP, INC.	3D	DWG. NO. SHEET 1 OF 1	REV. B.0
DRAWN	cneff	12/16/2013	PROJECT:					TRA20-1300-014	02/15/2024
CHECKED	MEW	02/15/2024	WAS:						