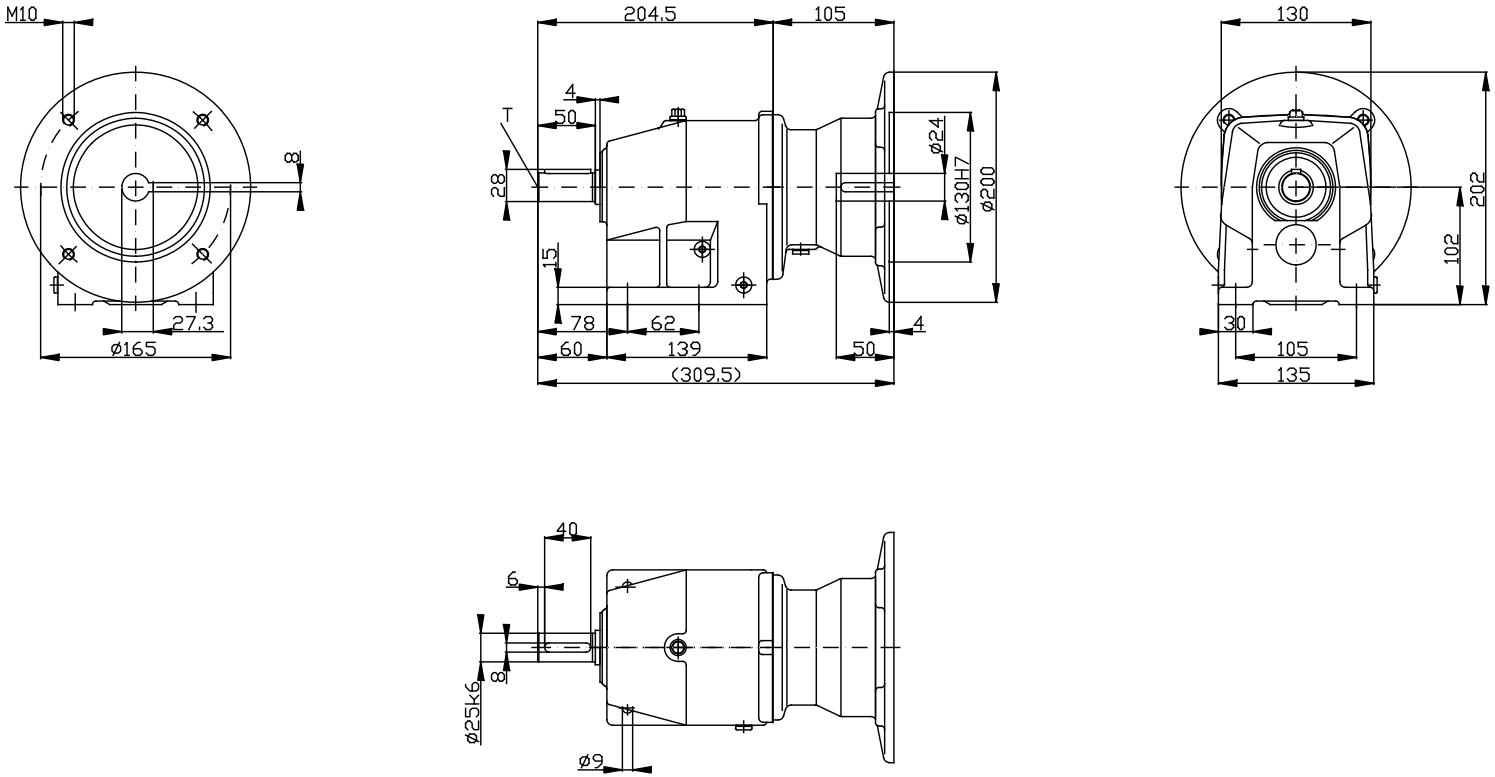

SK 12 IEC90

NORD

Nord Internet: http://www.nord.com

	Date	Name
Drawn	2/18/2013	mklunenberg

T: M10

Technical design may subject to change!
This drawing was made by NORD CAD 7.0.6