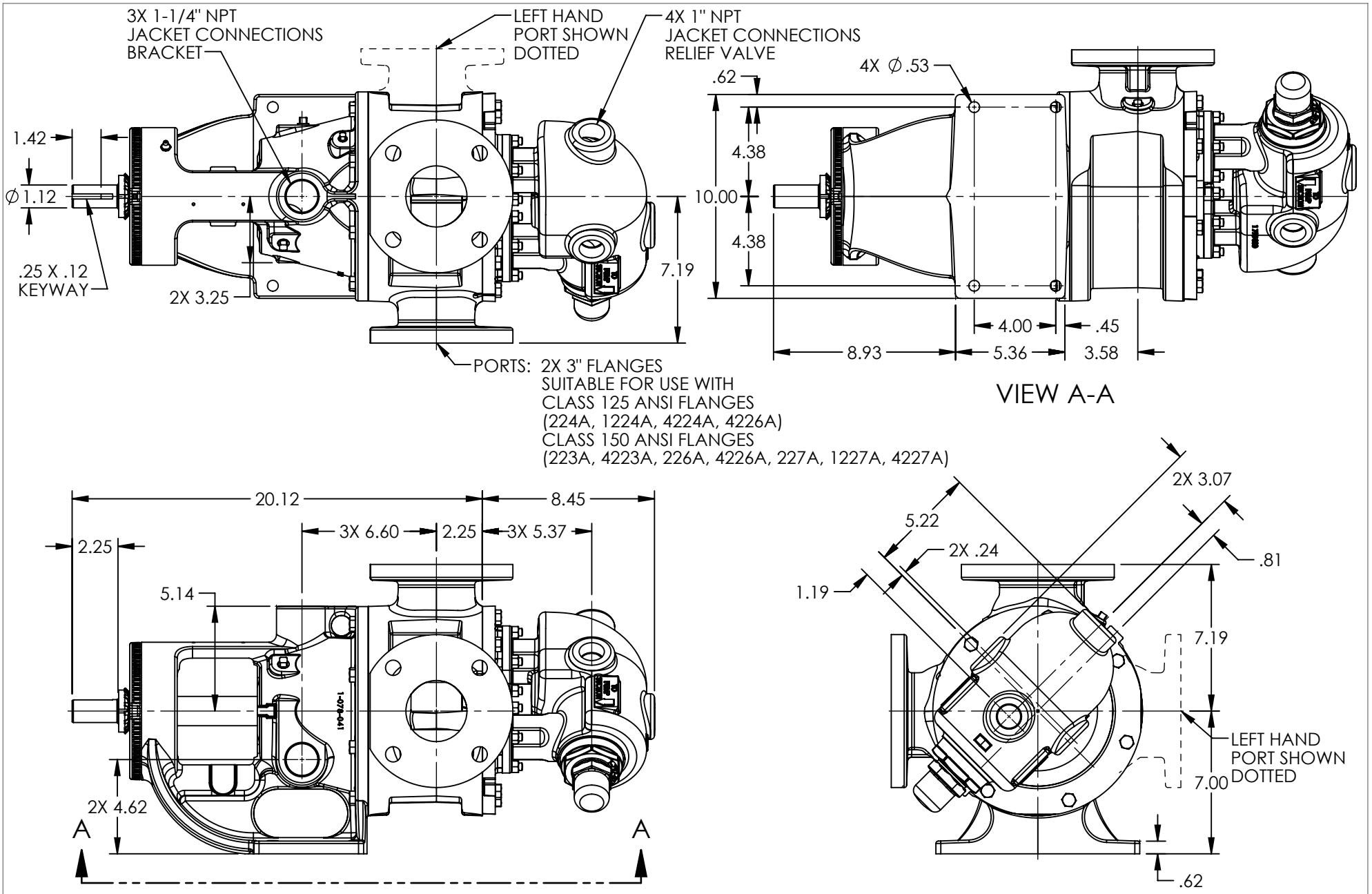

STANDARD MODELS:
LL224A, LL1224A, LL4224A, LL226A, LL4226A, LL223A, LL4223A, LL227A, LL1227A, LL4227A

NOTES:
1. ALL DIMENSIONS ARE FOR REFERENCE ONLY.

STATE	Released	05/18/2021	DIMENSIONS ARE IN INCHES	VIKING PUMP®	VIKING PUMP, INC. A Unit of IDEX Corporation Cedar Falls, IA 50613 U.S.A. VIKINGPUMP.COM	THIS DRAWING IS THE PROPERTY OF VIKING PUMP, INC. AND IS PROPRIETARY IN GENERAL AND DETAIL. IT SHALL NOT BE COPIED OR ITS CONTENTS REVEALED TO OUTSIDE PARTIES WITHOUT THE WRITTEN CONSENT OF VIKING PUMP, INC.	3D	DWG. NO. LV-4090	SHEET 1 OF 1	REV. B.1
DRAWN			PROJECT: E321							05/18/2021
CHECKED	BA	05/18/2021	WAS:							