PUMP MODEL	TRA20-0060
ORIENTATION	HORIZONTAL
COVER TYPE	STANDARD
SUCTION	1.0" NPT
DISCHARGE	1.0" NPT
SPECIALS	NONE

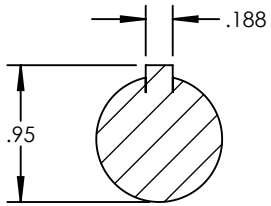

SECTION A-A
SCALE 3 : 4

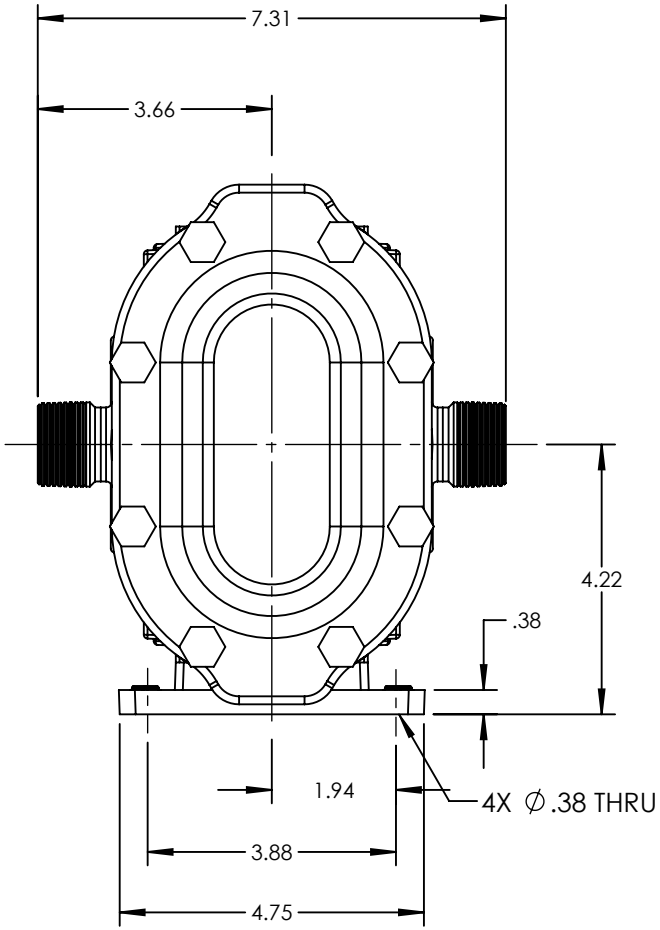

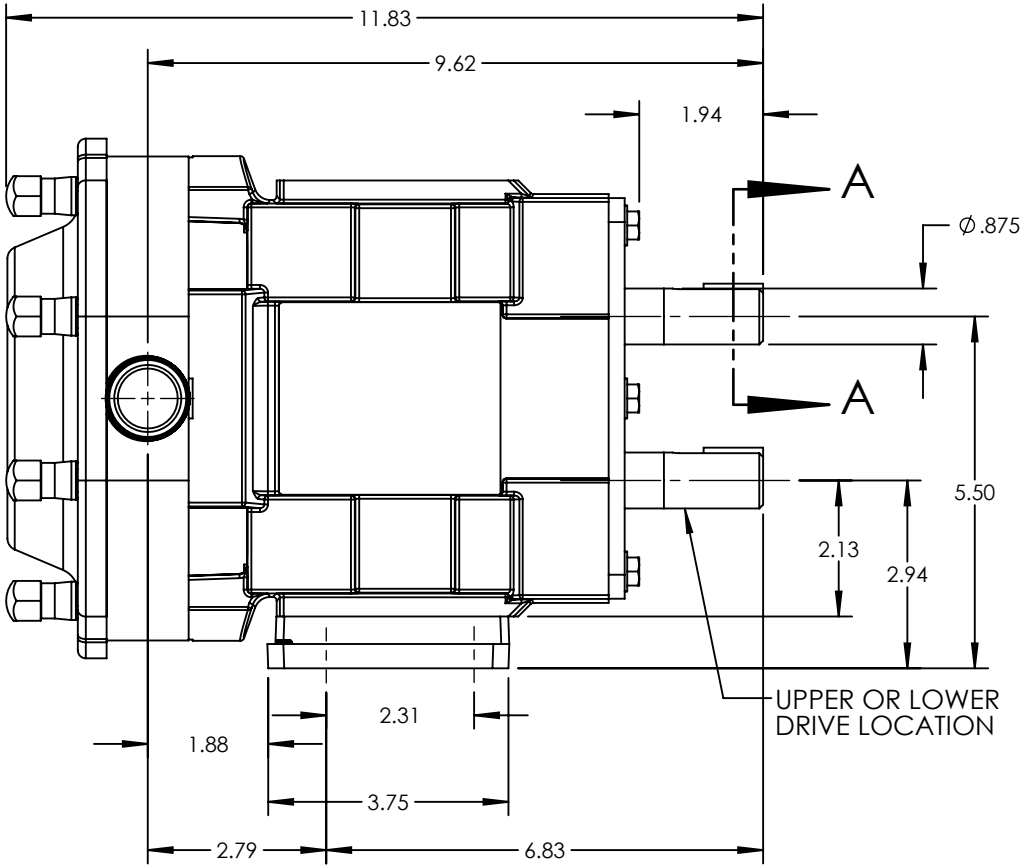

NOTES:
1. THIS IS NOT A CERTIFIED DRAWING. USE FOR GENERAL INSTALLATION ONLY.

STATE	Released		DIMENSIONS ARE IN INCHES	VIKING PUMP	VIKING PUMP, INC. A Unit of IDEX Corporation Cedar Falls, IA 50613 U.S.A. VIKINGPUMP.COM	THIS DRAWING IS THE PROPERTY OF VIKING PUMP, INC. AND IS PROPRIETARY IN GENERAL AND DETAIL. IT SHALL NOT BE COPIED OR ITS CONTENTS REVEALED TO OUTSIDE PARTIES WITHOUT THE WRITTEN CONSENT OF VIKING PUMP, INC.	3D	DWG. NO. SHEET 1 OF 1	REV. B.0
DRAWN	MWerning	2/22/2024	PROJECT:					TRA20-0060-006	02/22/2024
CHECKED			WAS:						