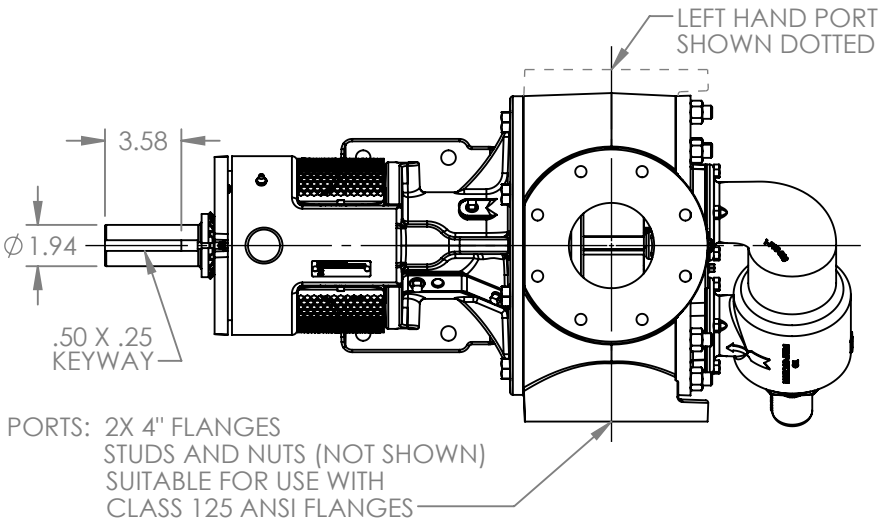

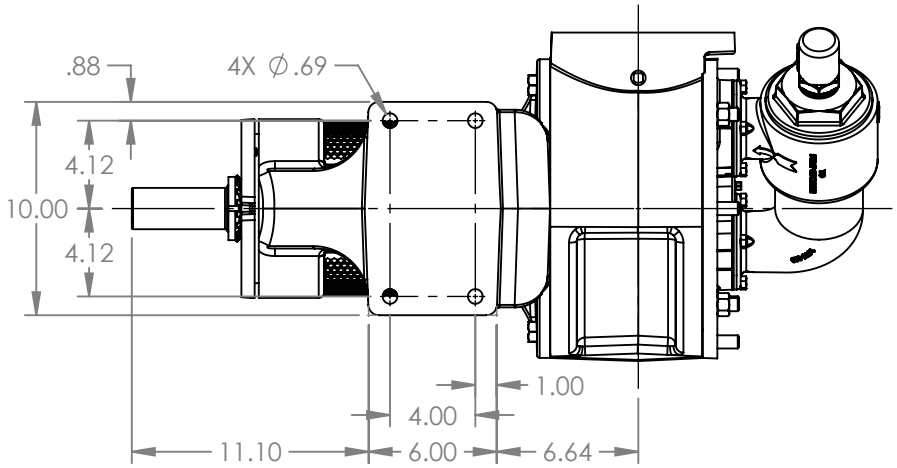

VIEW A-A

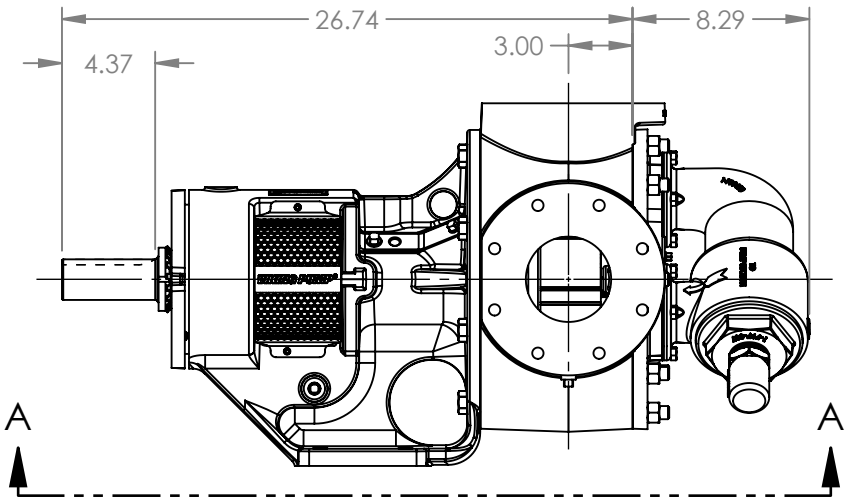

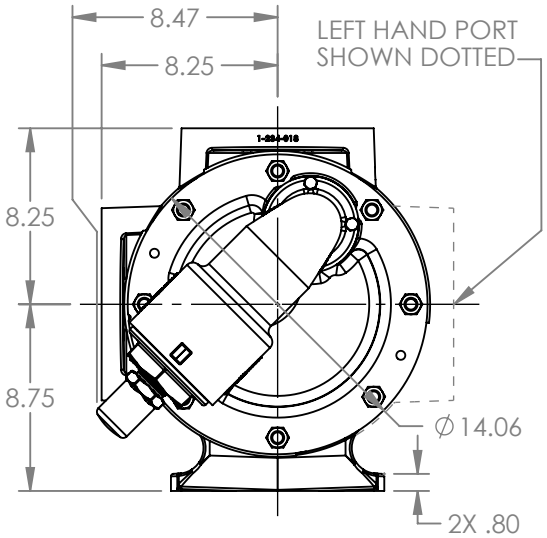

MODELS WITH OPTIONAL FLANGED PORTS:
Q124C, Q1124C, Q4124C, Q4624C

NOTES:
1. ALL DIMENSIONS ARE FOR REFERENCE ONLY.

STATE	Released	02/24/2026	DIMENSIONS ARE IN INCHES	VIKING PUMP®	VIKING PUMP, INC. A Unit of IDEX Corporation Cedar Falls, IA 50613 U.S.A. VIKINGPUMP.COM	THIS DRAWING IS THE PROPERTY OF VIKING PUMP, INC. AND IS PROPRIETARY IN GENERAL AND DETAIL. IT SHALL NOT BE COPIED OR ITS CONTENTS REVEALED TO OUTSIDE PARTIES WITHOUT THE WRITTEN CONSENT OF VIKING PUMP, INC.	3D	DWG. NO. QV-2337	SHEET 1 OF 1	REV. A.1
DRAWN	aeverhardt	10/28/2025	PROJECT: E399							02/24/2026
CHECKED	CJN	02/24/2026	WAS:							