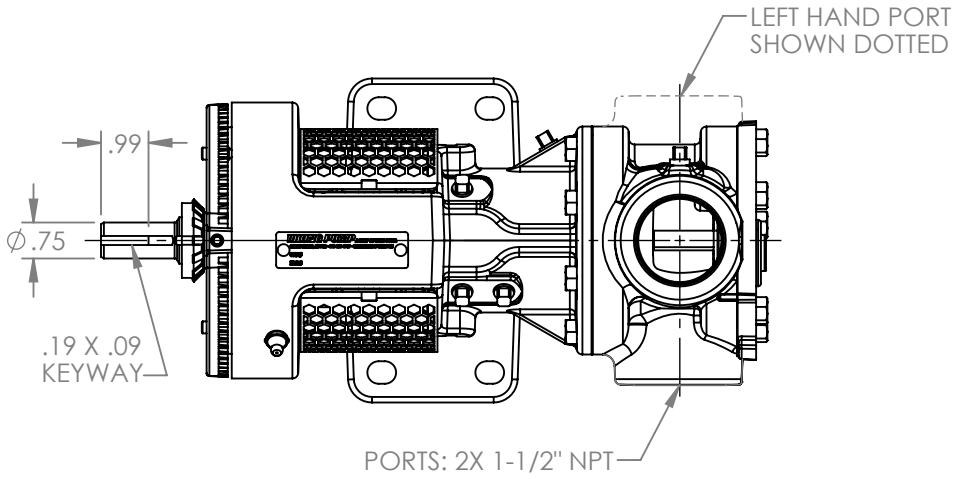

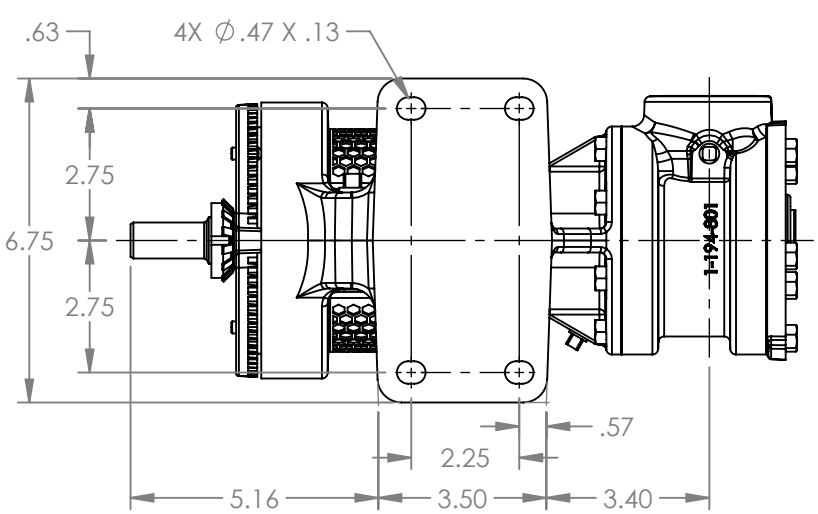

VIEW A-A

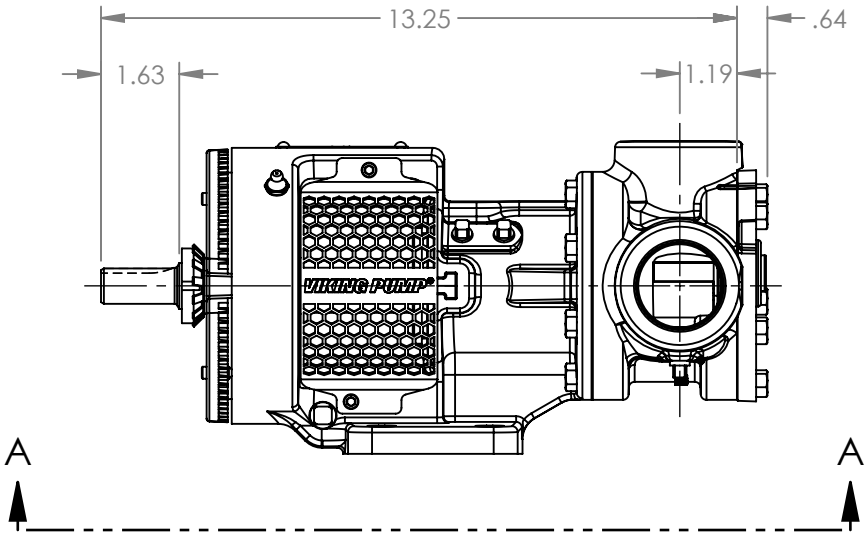

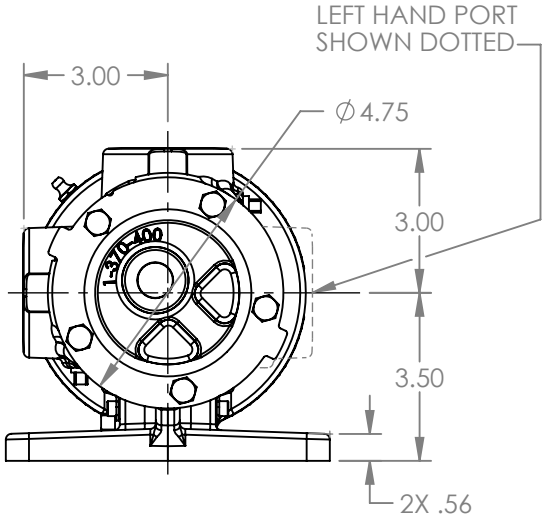

STANDARD MODELS:
H124C, H1124C, H4124C, H4624C
HL124C, HL1124C, HL4124C, HL4624C

NOTES:
1. ALL DIMENSIONS ARE FOR REFERENCE ONLY.

STATE	Released	05/15/2025	DIMENSIONS ARE IN INCHES	VIKING PUMP	VIKING PUMP, INC. A Unit of IDEX Corporation Cedar Falls, IA 50613 U.S.A. VIKINGPUMP.COM	THIS DRAWING IS THE PROPERTY OF VIKING PUMP, INC. AND IS PROPRIETARY IN GENERAL AND DETAIL. IT SHALL NOT BE COPIED OR ITS CONTENTS REVEALED TO OUTSIDE PARTIES WITHOUT THE WRITTEN CONSENT OF VIKING PUMP, INC.	3D	DWG. NO. HV-4273	SHEET 1 OF 1	REV. A.2
DRAWN	aeverhardt	05/02/2025	PROJECT: E399							05/15/2025
CHECKED	-	-	WAS:							