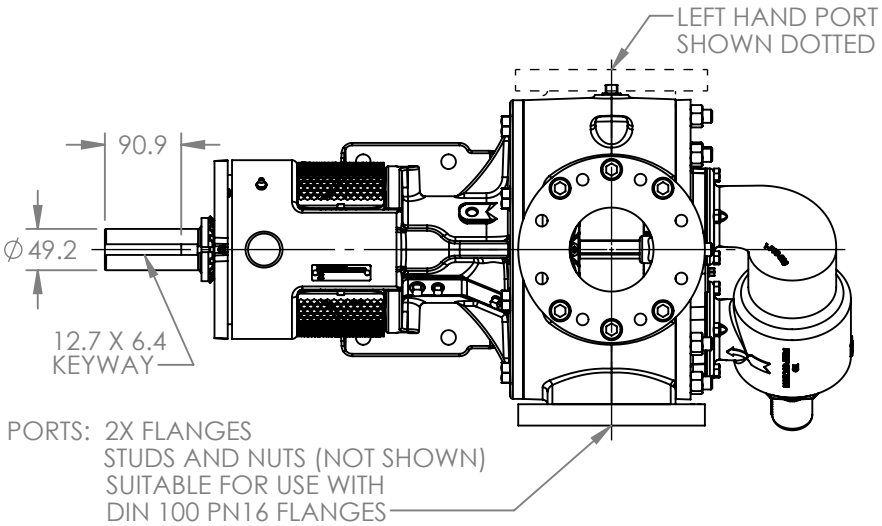

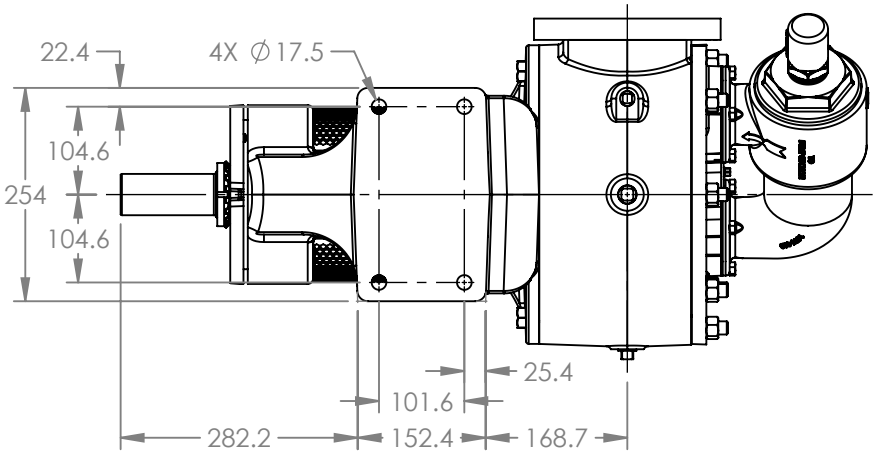

VIEW A-A

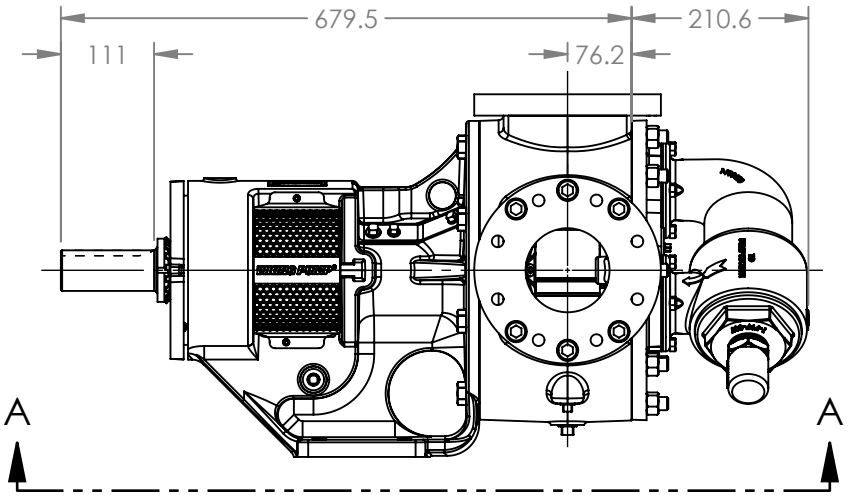

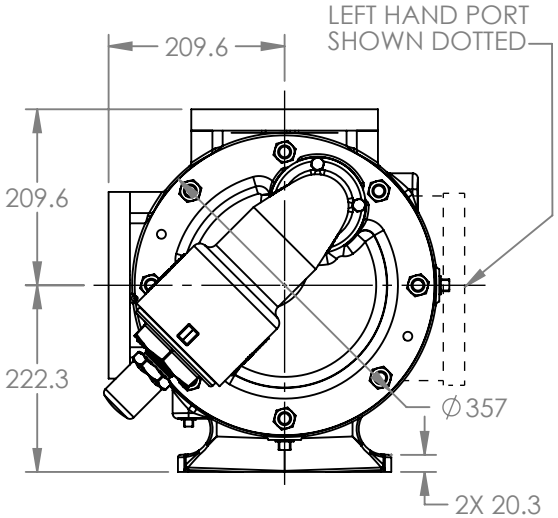

MODELS WITH OPTIONAL FLANGED PORTS:
Q124C, Q1124C, Q4124C, Q4624C

NOTES:
1. ALL DIMENSIONS ARE FOR REFERENCE ONLY.

STATE	Released	02/02/2026	DIMENSIONS ARE IN MILLIMETERS	VIKING PUMP	VIKING PUMP, INC. A Unit of IDEX Corporation Cedar Falls, IA 50613 U.S.A. VIKINGPUMP.COM	THIS DRAWING IS THE PROPERTY OF VIKING PUMP, INC. AND IS PROPRIETARY IN GENERAL AND DETAIL. IT SHALL NOT BE COPIED OR ITS CONTENTS REVEALED TO OUTSIDE PARTIES WITHOUT THE WRITTEN CONSENT OF VIKING PUMP, INC.	3D	DWG. NO. QV-2384	SHEET 1 OF 1	REV. A.0
DRAWN	DLende	Jan 26 2026 00:00 AM	PROJECT E399							02/02/2026
CHECKED	AE	02/02/2026	WAS:							