DRAWING NO.
HV-3367

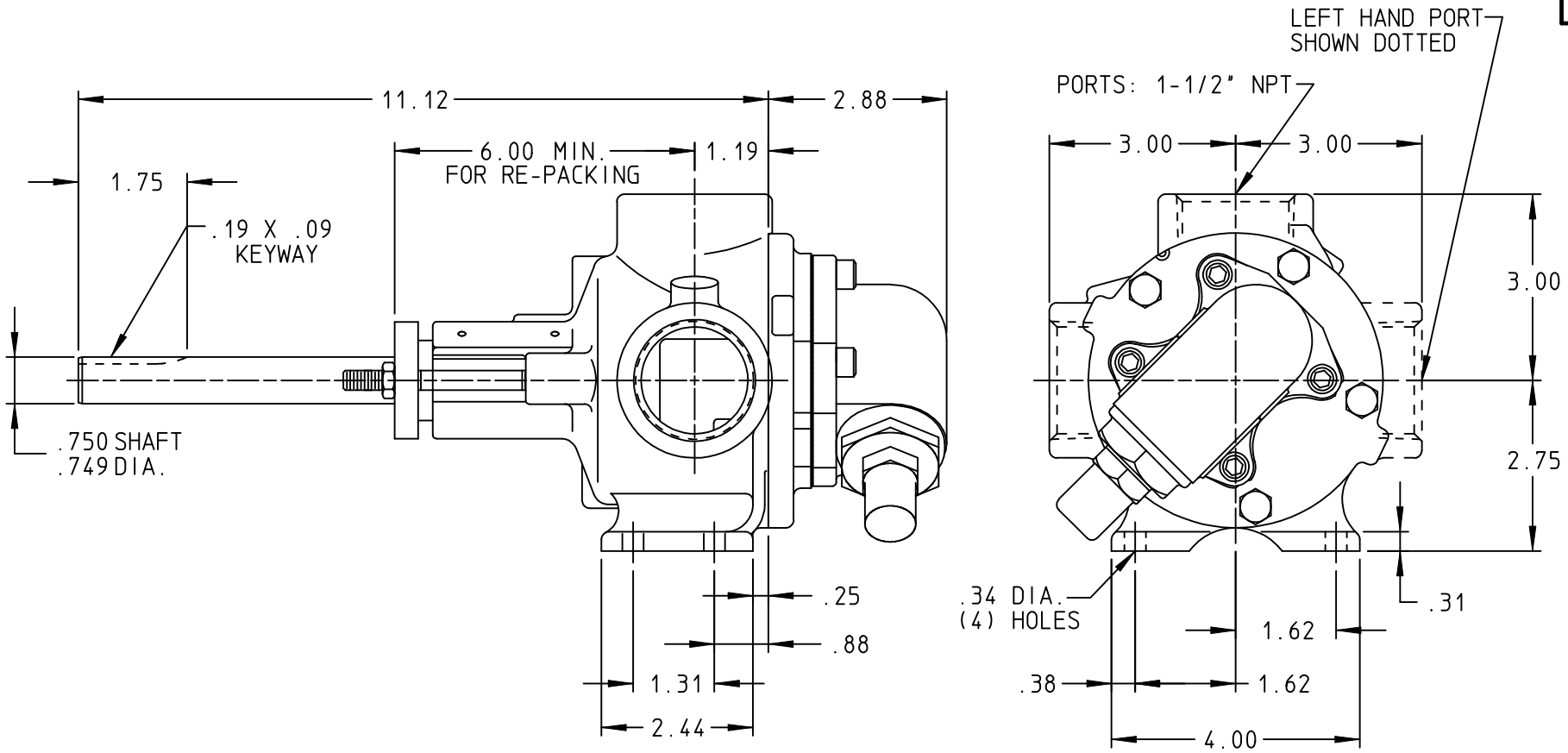

STANDARD MODELS: HL32

DRAWN REUTHER DATE 14 JUN 2000 CHECKED DRS DATE 04 OCT 2000	THIS DRAWING IS THE PROPERTY OF VIKING PUMP INC. AND IS PROPRIETARY IN GENERAL AND DETAIL. IT SHALL NOT BE COPIED OR ITS CONTENTS REVEALED TO OUTSIDE PARTIES WITHOUT THE WRITTEN CONSENT OF VIKING PUMP INC.	VIKING PUMP VIKING PUMP, INC. A Unit of IDEX Corporation Cedar Falls, Iowa 50613 U.S.A.	DRAWING NO. HV-3367	REV. A 14 JUN 2000