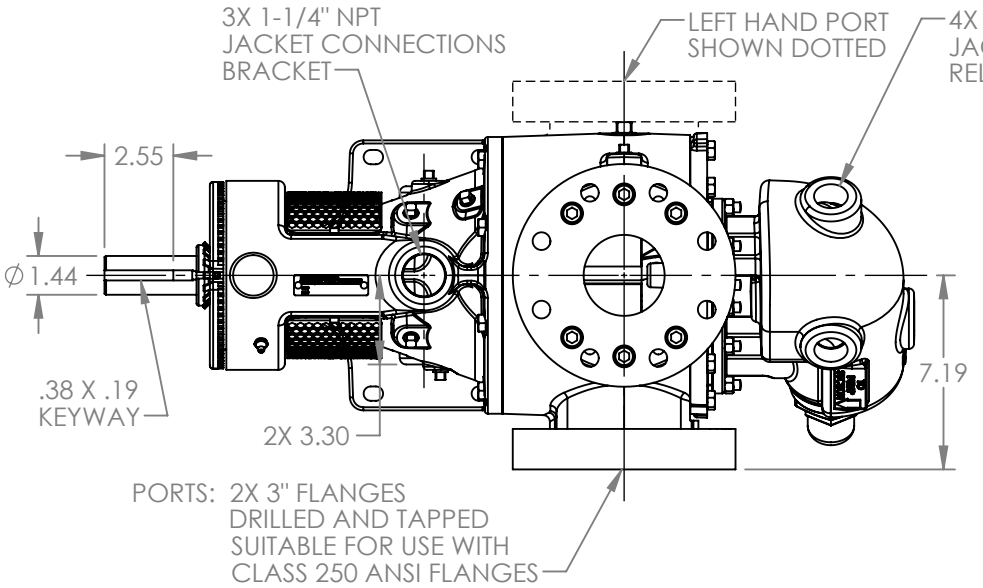

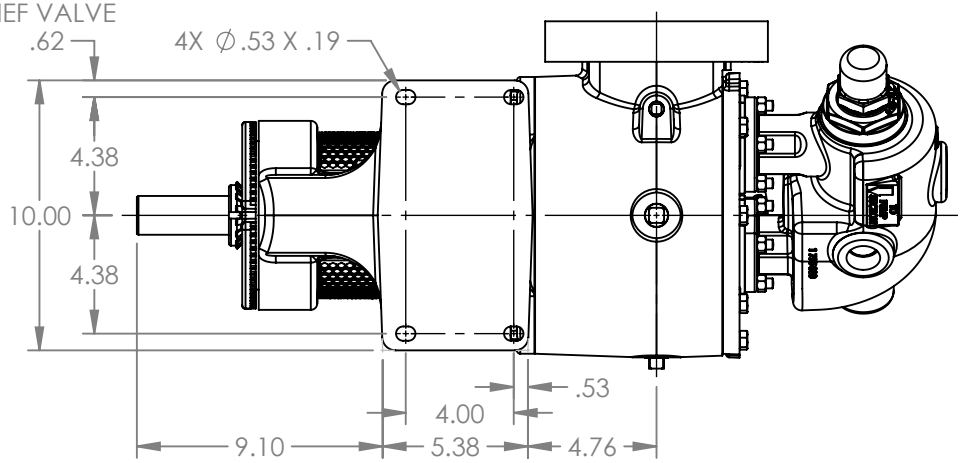

VIEW A-A

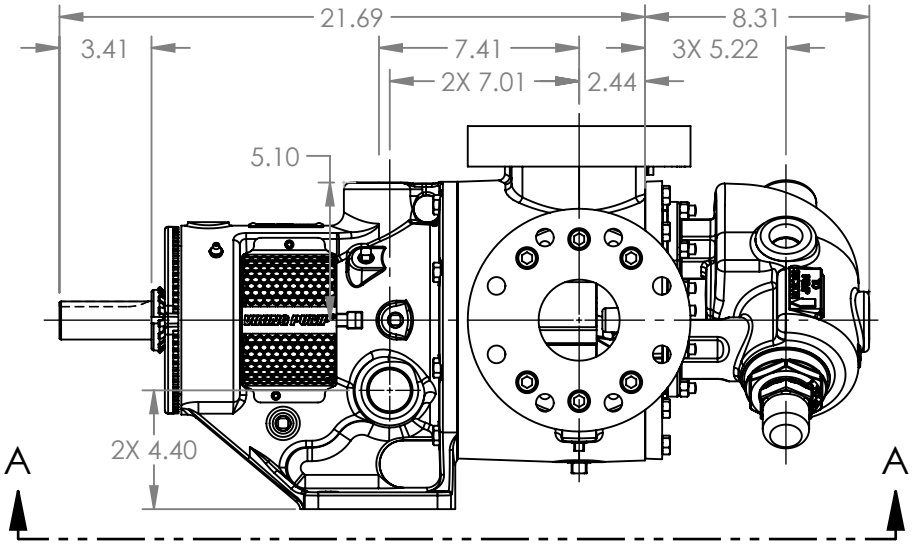

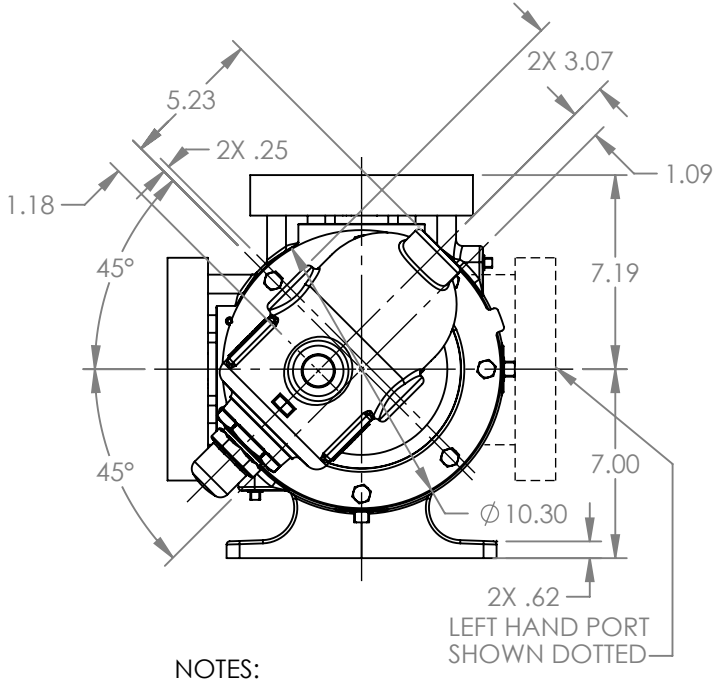

MODELS WITH OPTIONAL FLANGED PORTS:
LS224C, LS1224C, LS4224C

NOTES:
1. ALL DIMENSIONS ARE FOR REFERENCE ONLY.

STATE	Released	10/22/2025	DIMENSIONS ARE IN INCHES	VIKING PUMP®	VIKING PUMP, INC. A Unit of IDEX Corporation Cedar Falls, IA 50613 U.S.A. VIKINGPUMP.COM	THIS DRAWING IS THE PROPERTY OF VIKING PUMP, INC. AND IS PROPRIETARY IN GENERAL AND DETAIL. IT SHALL NOT BE COPIED OR ITS CONTENTS REVEALED TO OUTSIDE PARTIES WITHOUT THE WRITTEN CONSENT OF VIKING PUMP, INC.	3D	DWG. NO. LV-4825	SHEET 1 OF 1	REV. A.0
DRAWN	pstarr	10/22/2025	PROJECT: E399							10/22/2025
CHECKED	DTL	10/22/2025	WAS:							