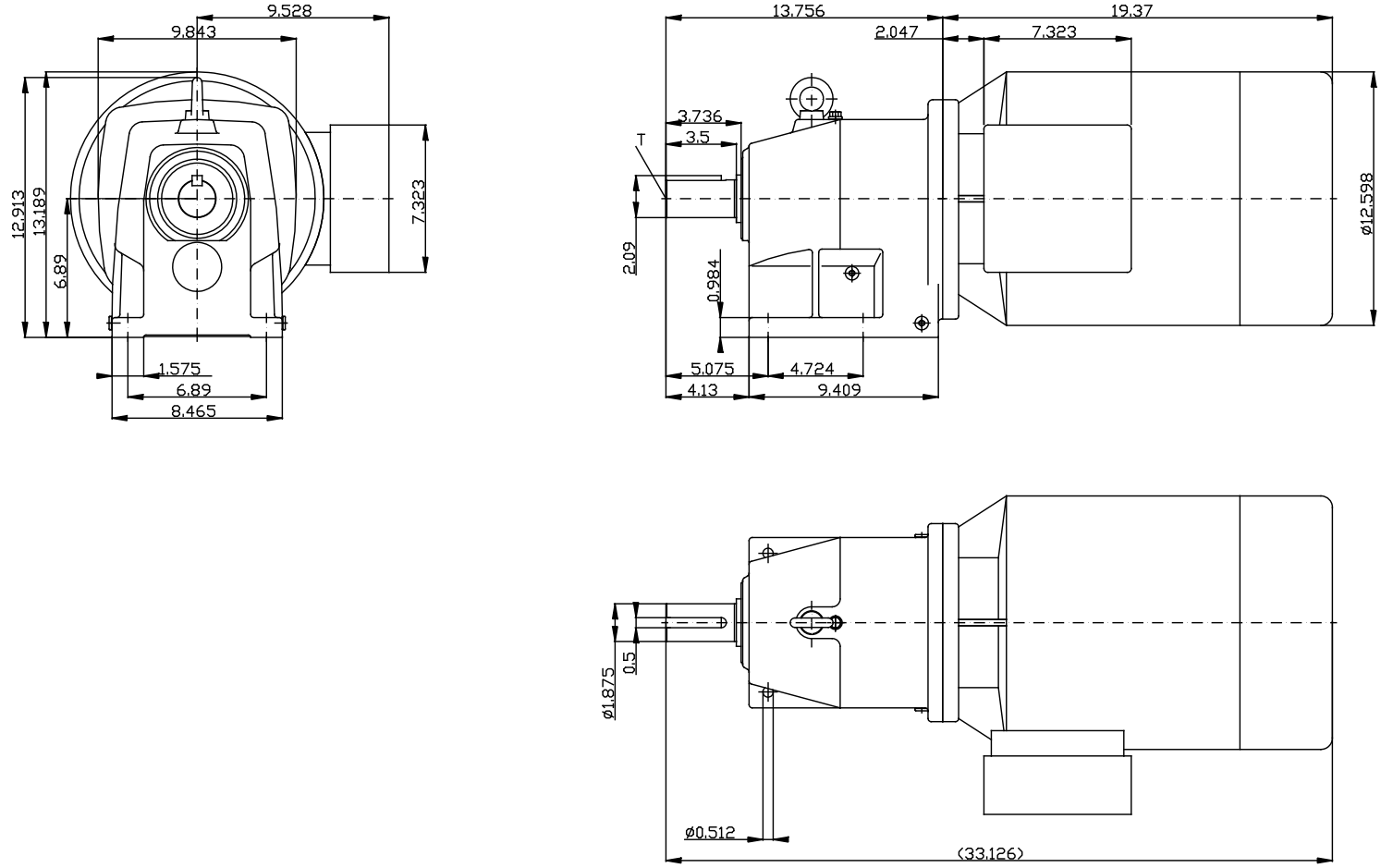

SK 42 - 160 L

T: Center Drill 5/8 - 11 UNC 2B

Technical design may subject to change!
This drawing was made by NORD CAD 7.0.6

NORD

Nord Internet: http://www.nord.com

	Date	Name
Drawn	2/13/2013	mklunenberg