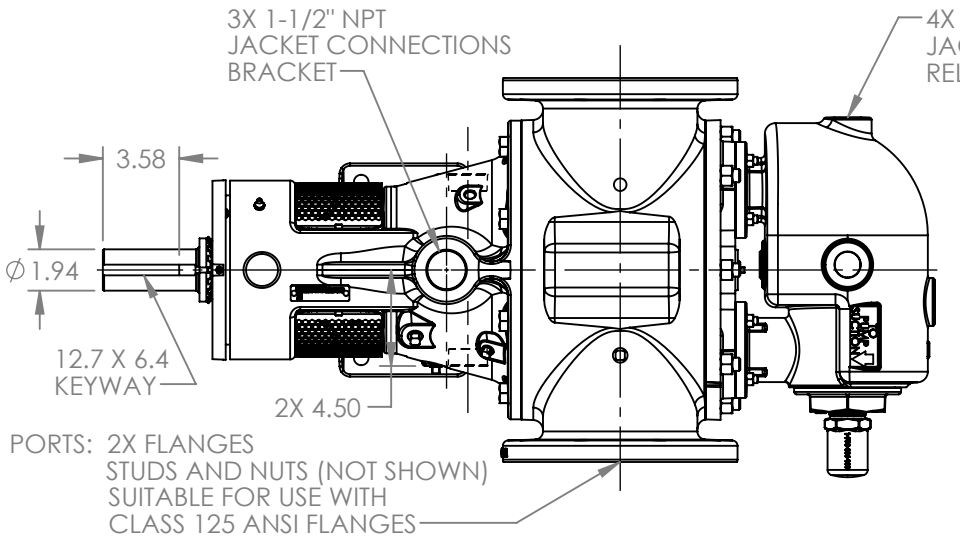


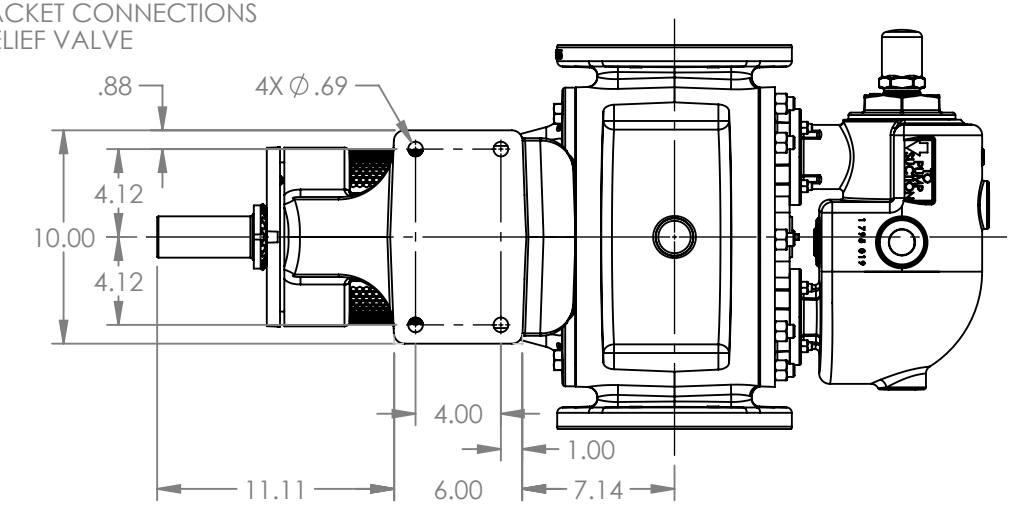


VIEW A-A

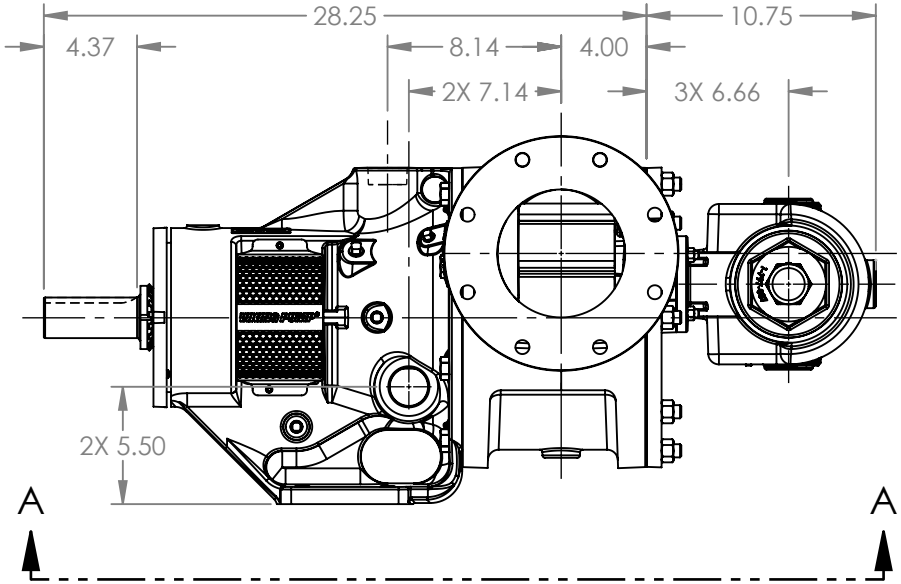


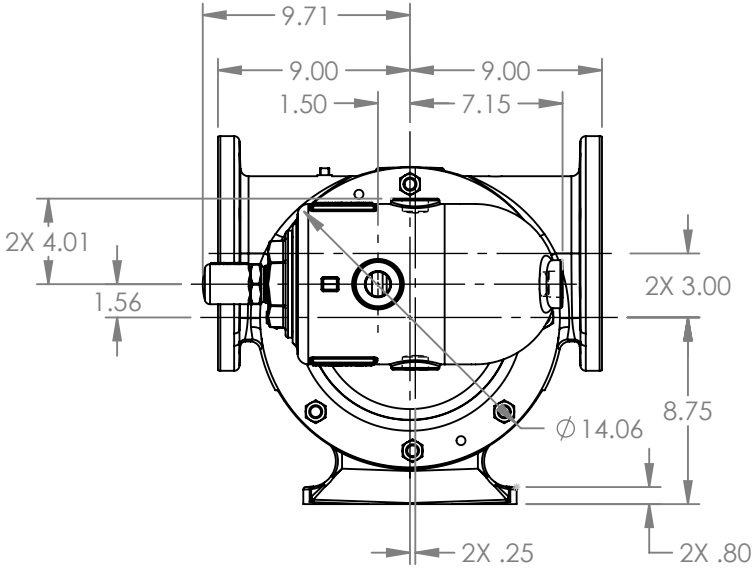


STANDARD MODELS:
Q224C, Q1224C, Q4224C

NOTES:
1. ALL DIMENSIONS ARE FOR REFERENCE ONLY.

| | | | | | | | | |
|---|---|---|---|---|---|---|---|---|
| STATE | Released | 11/03/2025 | DIMENSIONS ARE IN INCHES | VIKING PUMP® | VIKING PUMP, INC. A Unit of IDEX Corporation Cedar Falls, IA 50613 U.S.A. VIKINGPUMP.COM | THIS DRAWING IS THE PROPERTY OF VIKING PUMP, INC. AND IS PROPRIETARY IN GENERAL AND DETAIL. IT SHALL NOT BE COPIED OR ITS CONTENTS REVEALED TO OUTSIDE PARTIES WITHOUT THE WRITTEN CONSENT OF VIKING PUMP, INC. | 3D | DWG. NO. QV-2355 | SHEET 1 OF 1 | REV. A.0 |
| DRAWN | aeverhardt | 11/03/2025 | PROJECT: E399 | | | | | | | 11/03/2025 |
| CHECKED | DTL | 11/03/2025 | WAS: | | | | | | | |