PUMP MODEL	TRA10-0180
ORIENTATION	HORIZONTAL
COVER	JACKETED
INLET	1.5" RJT
DISCHARGE	1.5" RJT
SPECIALS	NONE

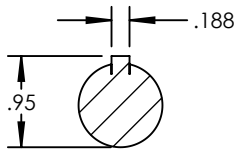

SECTION A-A
SCALE 1 : 2

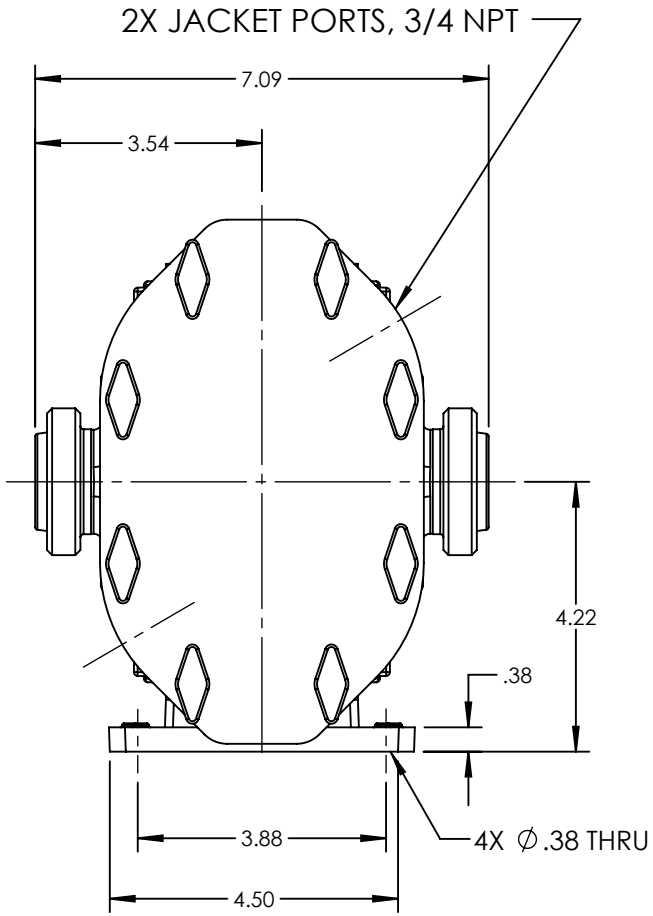

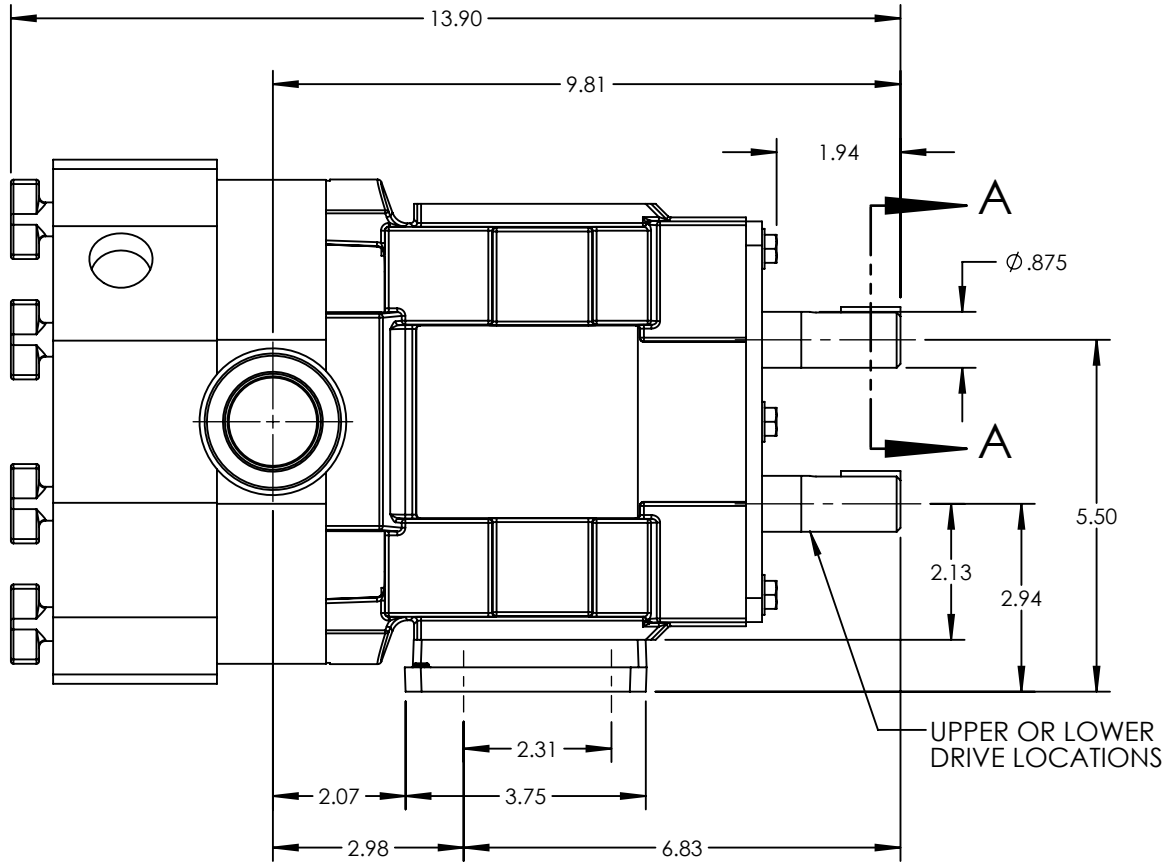

NOTES:
1. THIS IS NOT A CERTIFIED DRAWING. USE FOR GENERAL INSTALLATION ONLY.

STATE	Released	03/26/2024	DIMENSIONS ARE IN INCHES	VIKING PUMP	VIKING PUMP, INC. A Unit of IDEX Corporation Cedar Falls, IA 50613 U.S.A. VIKINGPUMP.COM	THIS DRAWING IS THE PROPERTY OF VIKING PUMP, INC. AND IS PROPRIETARY IN GENERAL AND DETAIL. IT SHALL NOT BE COPIED OR ITS CONTENTS REVEALED TO OUTSIDE PARTIES WITHOUT THE WRITTEN CONSENT OF VIKING PUMP, INC.	3D	DWG. NO. SHEET 1 OF 1	REV. B.0
DRAWN	cmihm	12/7/2012	PROJECT:					TRA10-0180-026	03/26/2024
CHECKED	MEW	03/26/2024	WAS:						