PUMP MODEL	TRA20-0300
ORIENTATION	HORIZONTAL
COVER TYPE	STANDARD
INLET	2.0" DIN 11851
DISCHARGE	2.0" DIN 11851
SPECIALS	NONE

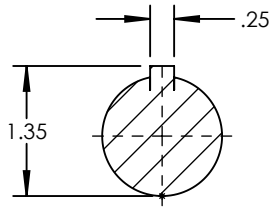

SECTION A-A
SCALE 1 : 2

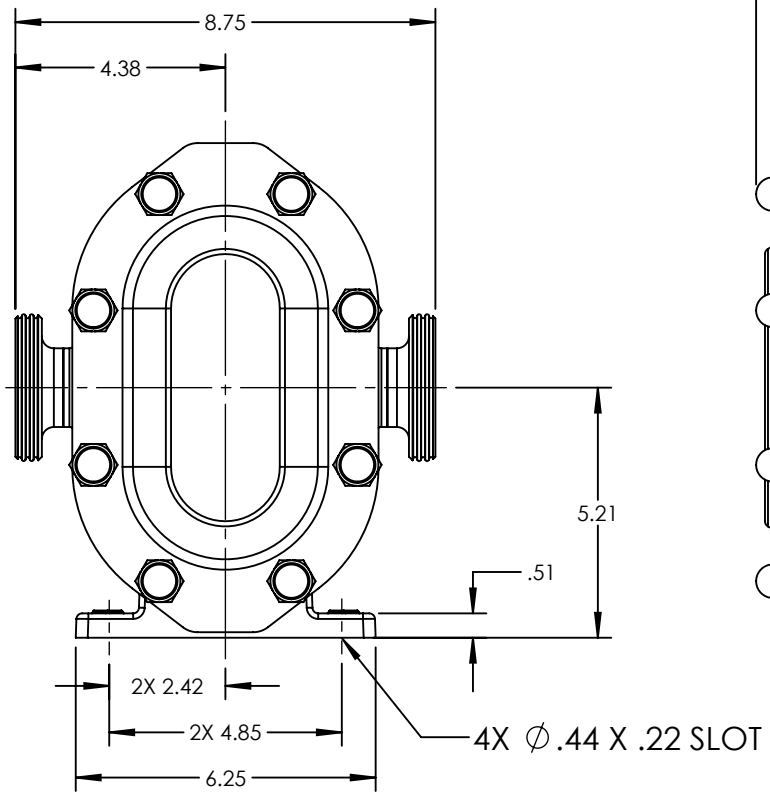

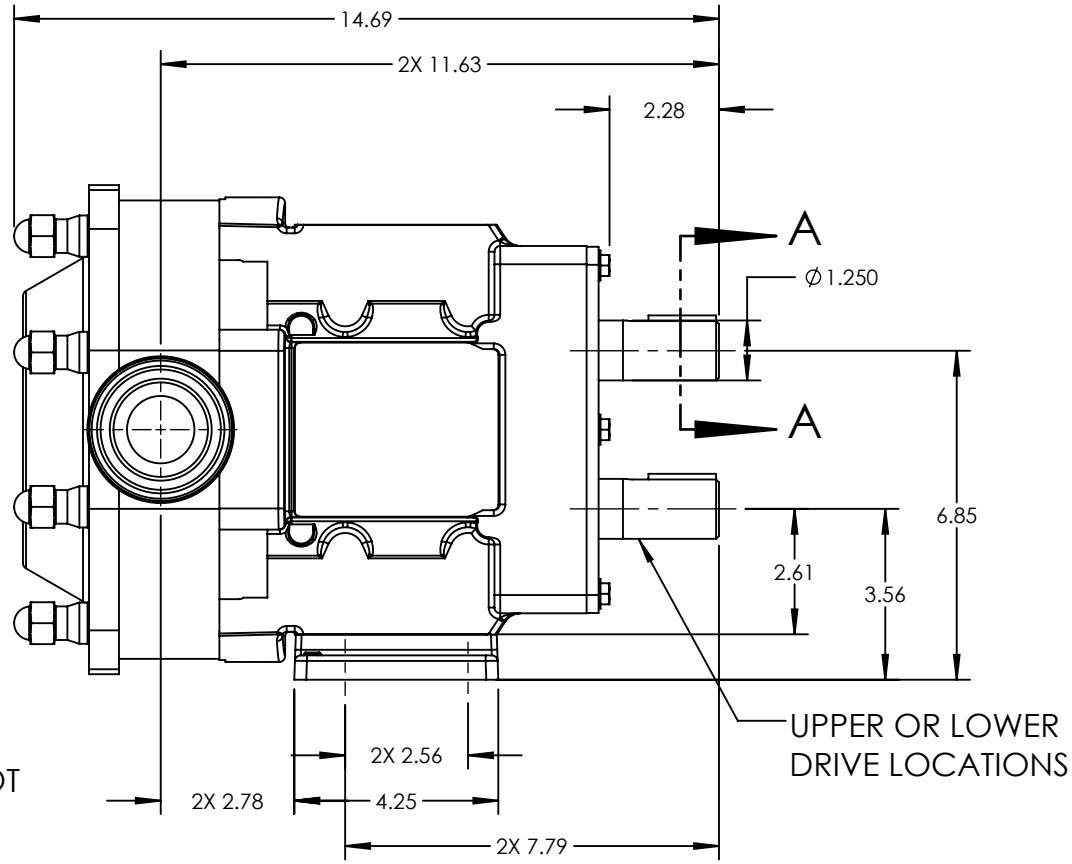

NOTES:
1. THIS IS NOT A CERTIFIED DRAWING. USE FOR GENERAL INSTALLATION ONLY.

STATE	Released	02/16/2024	DIMENSIONS ARE IN INCHES	VIKING PUMP	VIKING PUMP, INC. A Unit of IDEX Corporation Cedar Falls, IA 50613 U.S.A. VIKINGPUMP.COM	THIS DRAWING IS THE PROPERTY OF VIKING PUMP, INC. AND IS PROPRIETARY IN GENERAL AND DETAIL. IT SHALL NOT BE COPIED OR ITS CONTENTS REVEALED TO OUTSIDE PARTIES WITHOUT THE WRITTEN CONSENT OF VIKING PUMP, INC.	3D	DWG. NO. TRA20-0300-035	SHEET 1 OF 1	REV. B.0
DRAWN	MWerning	9/8/2020	PROJECT:							02/16/2024
CHECKED	MEW	02/16/2024	WAS:							